NACA TN 3800 10153

TECH LIBRARY KAFB, NM
0066629

NATIONAL ADVISORY COMMITTEE FOR AERONAUTICS

TECHNICAL NOTE 3800

EXPLORATORY INVESTIGATION OF THE EFFECTIVENESS OF BIPLANE WINGS WITH LARGE-CHORD DOUBLE SLOTTED FLAPS IN REDIRECTING A PROPELLER SLIPSTREAM DOWNWARD FOR VERTICAL TAKE-OFF

By Robert H. Kirby

Langley Aeronautical Laboratory
Langley Field, Va.

Washington
October 1956

AFMDC
TECHNICAL LIBRARY
AFL 2811

TECH LIBRARY KAFB, NM
0066629

U

NATIONAL ADVISORY COMMITTEE FOR AERONAUTICS

TECHNICAL NOTE 3800

EXPLORATORY INVESTIGATION OF THE EFFECTIVENESS OF BIPLANE WINGS WITH LARGE-CHORD DOUBLE SLOTTED FLAPS IN REDIRECTING A PROPELLER SLIPSTREAM DOWNWARD FOR VERTICAL TAKE-OFF

By Robert H. Kirby

SUMMARY

Results are presented of static-force tests made in the static-thrust facility of the Langley free-flight tunnel on biplane wings with large-chord double slotted flaps which turn the slipstream of a single counterrotating propeller downward for vertical take-off. The span of the wings was approximately equal to the theoretical diameter of the slipstream (70 percent of the propeller diameter). The investigation provided information on the effect of chord length, flap deflection, propeller position, end plates, fuselage, and ground proximity on the efficiency of the wing system in turning the propeller slipstream.

The investigation showed that it was possible to turn the propeller slipstream 90° so that the resultant-force vector of the wing-propeller combination was normal to the propeller shaft and was 80 percent of the magnitude of the propeller thrust. When the model was near the ground, the slipstream was turned only about 75°, but the resultant force increased to about 88 percent of the thrust. The resultant force was reduced about 10 percent when a fuselage was added to the wing system. Sealing the slots on the wings had no effect on the turning effectiveness when the model was well above the ground, but the resultant force was reduced if the slots were sealed when the model was near the ground. End plates were essential for obtaining high turning angles and efficiency.

INTRODUCTION

In the process of designing a free-flight model to represent a liaison-class vertical-take-off airplane, some exploratory static-force tests were made by the Langley Free-Flight-Tunnel Section with simplified models assembled from existing components in order to investigate various wing systems proposed for the free-flight model. This paper presents the results of the static-force tests on a biplane configuration with large-

chord double slotted flaps which turn the slipstream of a counterrotating propeller. The investigation provided information on the effect of chord length, flap deflection, propeller position, end plates, fuselage, and ground proximity on the efficiency of the wing system in turning the propeller slipstream. Since the tests reported in this paper were made only to obtain some preliminary indication of the relative efficiency of various configurations, systematic changes of test variables were not made in all cases. It is felt, however, that these results will be helpful since very little data have been published on the effectiveness of a biplane configuration in turning the propeller slipstream.

SYMBOLS

The positive sense of forces, moments, and angles is shown in figure 1. The pitching moments presented in this paper are referred to a point on the bottom-wing chord line halfway between the two wing quarter-chord points as shown in figure 1. The definitions of the symbols used in the present paper are as follows:

F_L force normal to thrust axis, lb

F_D force parallel to thrust axis (thrust minus drag), lb

F_R resultant force, lb

M_Y pitching moment, ft-lb

T propeller thrust, lb

c wing chord, ft

$\bar{c}$ mean aerodynamic chord of wing, ft

e vertical position of propeller relative to the leading edge of the lower wing (positive when propeller is above leading edge), in.

θ inclination of resultant-force vector from thrust axis, $\tan^{-1}\frac{F_L}{F_D}$, deg

D propeller diameter, ft

i_w wing incidence, deg

δ_f flap deflection, deg

Subscripts:

1, 2 numerals indicating which flap was deflected (see fig. 1)

APPARATUS AND MODEL

The model was assembled from existing components. The wings were unswept and untapered and were equipped with large-chord double slotted flaps. The wing spans were approximately equal to the diameter of the theoretical slipstream (70 percent of the propeller diameter) and end plates were used on each end. A sketch of the basic model with chord-extensions is shown in figure 2, and the geometric characteristics of each wing and of the propellers are given in the following table:

Each wing:	
Area, sq in.	151.2
Span, in.	16.8
Chord, in.	9.0
Airfoil section	NACA 0015
Aspect ratio	1.87
Propellers:	
Type	Six-blade counterrotating
Diameter, in.	24.0
Hamilton Standard blade	3155-6-1.5
Solidity of one blade	0.0475

Each wing was set at 5° incidence for all the tests. The ordinates of the flaps were derived from the slotted flap 2-h of reference 1 and are presented in table I. During the investigation, sheet-aluminum chord-extensions of various lengths were added to the upper surface of the rear flaps (fig. 1). These chord-extensions increased the effective angle of the rear flaps by about 7°.

The wings were mounted on a three-component strain-gage balance so that lift, drag, and pitching moment could be measured. Most of the tests were made with the wings mounted on the balance by means of the end plate as shown in figure 2. For the fuselage- and end-plate-effect tests, however, the model was mounted as in figure 3 which shows a sketch of the model with a fuselage and chord-extensions. When the wings were mounted on the fuselage the deflected flaps of the lower wing were not cut for the fuselage but were continuous across the span.

The propellers were mounted separately from the wings on another strain-gage beam so that the thrust could be held constant at 23 pounds for all the tests. The wooden propellers were driven by a 5-horsepower electric motor.

The ground board used in the tests was a 6- by 8-foot sheet of plywood. As the height of the ground board was varied, the angle between the board and thrust axis was set to the approximate angle needed for vertical take-off, that is, normal to the resultant-force vector.

The investigation was made under static-thrust conditions in a large open area (approximately a 70-foot cube) in the building of the Langley free-flight tunnel and, therefore, needed no corrections normally associated with wind-tunnel tests.

RESULTS AND DISCUSSION

The effect of a fuselage on the turning effectiveness of the biplane wings is shown in figure 4. The shape of the fuselage is shown on the sketch in figure 3, and the fuselage widths are given in the table in figure 4. The main effect of the fuselage on the effectiveness of the wing system was to reduce the resultant force 10 to 15 percent when the model was well above the ground and 15 to 20 percent when it was near the ground.

Figure 5 gives the effect of end plates on the turning effectiveness of the wing system with fuselage. The large end plates could be cut down to small plates with an approximately semicircular shape on each wing with little effect, as shown in the sketch in figure 5; but removal of all end-plate area reduced both the turning angle and the resultant force. In fact, although test points are not shown in figure 5, it was found that even slight reductions in end-plate area beyond that shown in the figure for the small end plates caused a considerable reduction in both the turning angle and resultant force.

The effect of ground proximity on the ability of the wings to turn the slipstream is shown in figure 6. As shown in figure 6(a) the results were dependent on the configuration tested. For two of the configurations there was a reduction of turning angle of about 10°, but the resultant force increased as the model neared the ground. For the third configuration of figure 6(a) and for the two configurations shown in figure 6(b), the turning angle was reduced 30° as the ground was approached, whereas the resultant force increased until the model came within 4 inches of the ground and then decreased as the model came closer.

The effect of chord length is shown in figure 7. In figure 7(a) it is seen that a reduction in chord length of 1 inch for either of two top wing positions resulted in a loss of turning angle of about 7°, whereas there was little change in resultant force either with or without ground proximity. Figure 7(b) shows the effect of chord length for various test

configurations near the ground. Again, this figure shows that the main effect of reducing the chord is a reduction of turning angle.

The effect of the top-wing position on the turning effectiveness of the wing system is shown in figure 8. The best results were obtained with the top wing about 7 inches above the bottom wing with the model either near the ground or away from the ground.

Figure 9 gives the results of tests at two vertical positions of the propellers. Further results are shown in figure 6(b). Tests were made with the thrust line on, 1 inch above, and 1 inch below the chord line of the bottom wing. Although there was not a large difference in the results, the best position tested was with the thrust line 1 inch above the chord line of the bottom wing.

While studying figures 7 to 9 it should be noted that the results presented in these figures (chord length, top-wing position, and propeller position) were somewhat dependent on each other. The general result from these tests was that, if enough chord was provided and the wing positions were such that the wings extended approximately from the top to the bottom of the theoretical slipstream, then the propeller slipstream could be turned about 90° so that the resultant-force vector of the wing-propeller combination was normal to the propeller shaft and was 80 percent of the magnitude of the propeller thrust. When the model was near the ground, the slipstream was turned only about 75°, but the resultant force increased to about 88 percent of the thrust. These results are represented by the circular symbols in figure 7(a).

Figure 10 presents the results obtained from two horizontal positions of the propellers. When the model was well above the ground there was little difference between the results obtained with the propellers 4 or 10 inches in front of the leading edge of the bottom wing. With the ground board set at 4 inches, however, there was a marked increase in turning angle when the propellers were moved from 10 to 4 inches in front of the bottom wing.

The effect of changing the flap deflection is shown in figure 11. There is a marked difference in the results caused by ground effect. The main effect of reducing the flap deflections without the ground board is a reduction in turning angle. Reducing the flap deflections on both wings with the ground height at 2 inches, however, results in some increase in the turning angle and a very large increase in the resultant force. Another way of summarizing these results is to assume that, with large flap deflections, a high turning angle is achieved, but the effect of ground proximity is very detrimental. Smaller flap deflections result in lower turning angles, but ground proximity is not so detrimental and a higher resultant force is achieved. It should also be noted that, after the flap deflection on both wings was reduced, as shown in figure 11, the

flap deflection on the bottom wing was increased to its original value with little or no loss in resultant force. It would appear, therefore, that flap deflection on the top wing must be more critical than on the bottom wing.

The effect of sealing the slots on the wings is shown in figure 12. Sealing the slots had no noticeable effect except when near the ground where a reduction in resultant force was experienced.

CONCLUDING REMARKS

An investigation was made to determine the effectiveness of a biplane-wing configuration with large-chord double slotted flaps in turning the slipstream of a counterrotating propeller.

The effects of the vertical position of the propeller, chord length, and top-wing position were somewhat dependent on each other. The general result from this investigation was that, if enough chord was provided and the wing positions were such that the wings extended approximately from the top to the bottom of the theoretical slipstream, then the propeller slipstream could be turned 90° so that the resultant-force vector of the wing-propeller combination was normal to the propeller shaft and was 80 percent of the magnitude of the propeller thrust. When the model was near the ground, the slipstream was turned only about 75° but the resultant force increased to about 88 percent of the thrust.

The effect of ground proximity on the turning effectiveness of the biplane wings depended on the configuration tested. For one configuration in which the propellers were positioned 10 inches in front of the bottom wing and the flap deflections were 60° and 30°, the turning angle was reduced 30° when the wings were near the ground. The adverse ground effect could be greatly reduced, however, by moving the propellers closer to the wings and by utilizing less flap deflection. For the best conditions, ground proximity resulted in a 10° reduction in turning angle accompanied by a 10- to 20-percent increase in the resultant force.

The resultant force was reduced about 10 percent when a fuselage was added to the wing system.

Sealing the slots on the wings had no effect on the turning effectiveness when the model was well above the ground, but the resultant force was reduced if the slots were sealed when the model was near the ground.

End plates with an approximately semicircular shape on each wing (defined by the upper surface of the wing with the flaps deflected and a line between the leading and trailing edge) were essential for obtaining high turning angles and efficiency. Larger end plates showed no improvement in the turning effectiveness of the wing system.

Langley Aeronautical Laboratory,
National Advisory Committee for Aeronautics,
Langley Field, Va., June 12, 1956.

REFERENCE

1. Wenzinger, Carl J., and Harris, Thomas A.: Wind-Tunnel Investigation of an N.A.C.A. 23012 Airfoil With Various Arrangements of Slotted Flaps. NACA Rep. 664, 1939.

TABLE I.- DETAILS OF THE WING AND FLAP SECTIONS

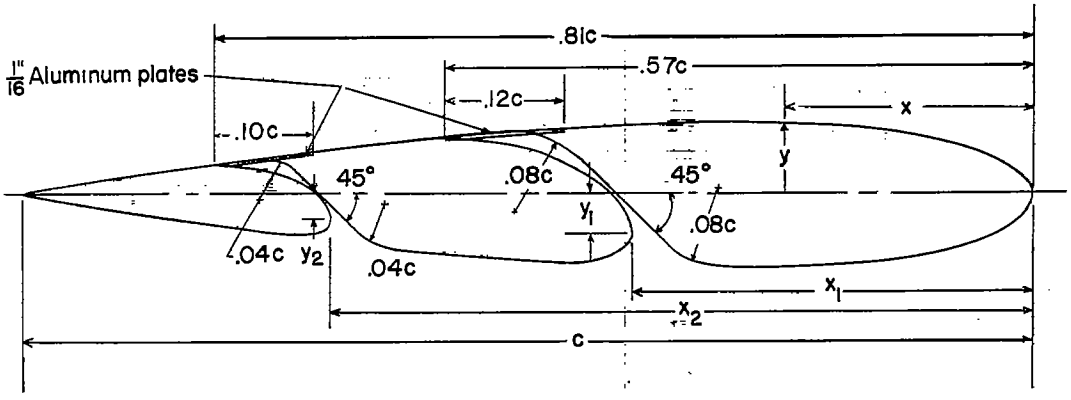

WING AND FLAP ORDINATES

Station x, percent chord	Ordinate, y, percent chord					
	Wing, NACA 0015		$Flap_1$		$Flap_2$	
	Upper	Lower	Upper	Lower	Upper	Lower
0	0	0	—	—	—	—
1.25	2.37	-2.37	—	—	—	—
2.50	3.27	-3.27	—	—	—	—
5.00	4.40	-4.40	—	—	—	—
7.50	5.25	-5.25	—	—	—	—
10.00	5.85	-5.85	—	—	—	—
15.00	6.68	-6.68	—	—	—	—
20.00	7.17	-7.17	—	—	—	—
25.00	7.43	-7.43	—	—	—	—
30.00	7.50	-7.50	—	—	—	—
40.00	7.25	-7.25	-3.80	-3.80	—	—
40.50	—	—	-2.00	-5.10	—	—
41.00	—	—	-1.10	-5.70	—	—
42.00	—	—	.20	-6.30	—	—
44.00	—	—	1.80	-6.80	—	—
46.00	—	—	3.00	-6.90	—	—
48.00	—	—	3.90	-6.80	—	—
50.00	6.62	—	4.60	-6.62	—	—
54.00	—	—	5.60	—	—	—
58.00	—	—	5.70	—	—	—
60.00	5.70	-5.70	5.70	—	—	—
70.00	4.58	—	—	—	-2.30	-2.30
70.50	—	—	—	—	-1.00	-3.40
71.00	—	—	—	—	-.40	-3.70
72.00	—	—	—	—	.60	-4.00
74.00	—	—	—	—	1.70	-4.00
76.00	—	—	—	—	2.50	—
78.00	—	—	—	—	2.90	—
80.00	3.28	-3.28	—	—	3.00	—
82.00	—	—	—	—	2.90	—
90.00	1.81	-1.81	—	—	—	—
95.00	1.01	-1.01	—	—	—	—
100.00	.16	-.16	—	—	—	—

PATH OF THE FLAP NOSE

[value in percent chord]

δ_f, deg	$Flap_1$		$Flap_2$	
	x_1	y_1	x_2	y_2
0	40.0	-3.5	70.0	-2.5
10	44.0	-2.0	72.5	-1.5
20	48.0	-1.5	74.7	-1.2
30	52.5	-1.5	77.2	-1.2
40	54.8	0.5	79.2	-0.2
50	56.0	2.0	80.4	0.7
60	57.7	2.5	81.0	1.0
70	59.0	2.8	81.3	2.0

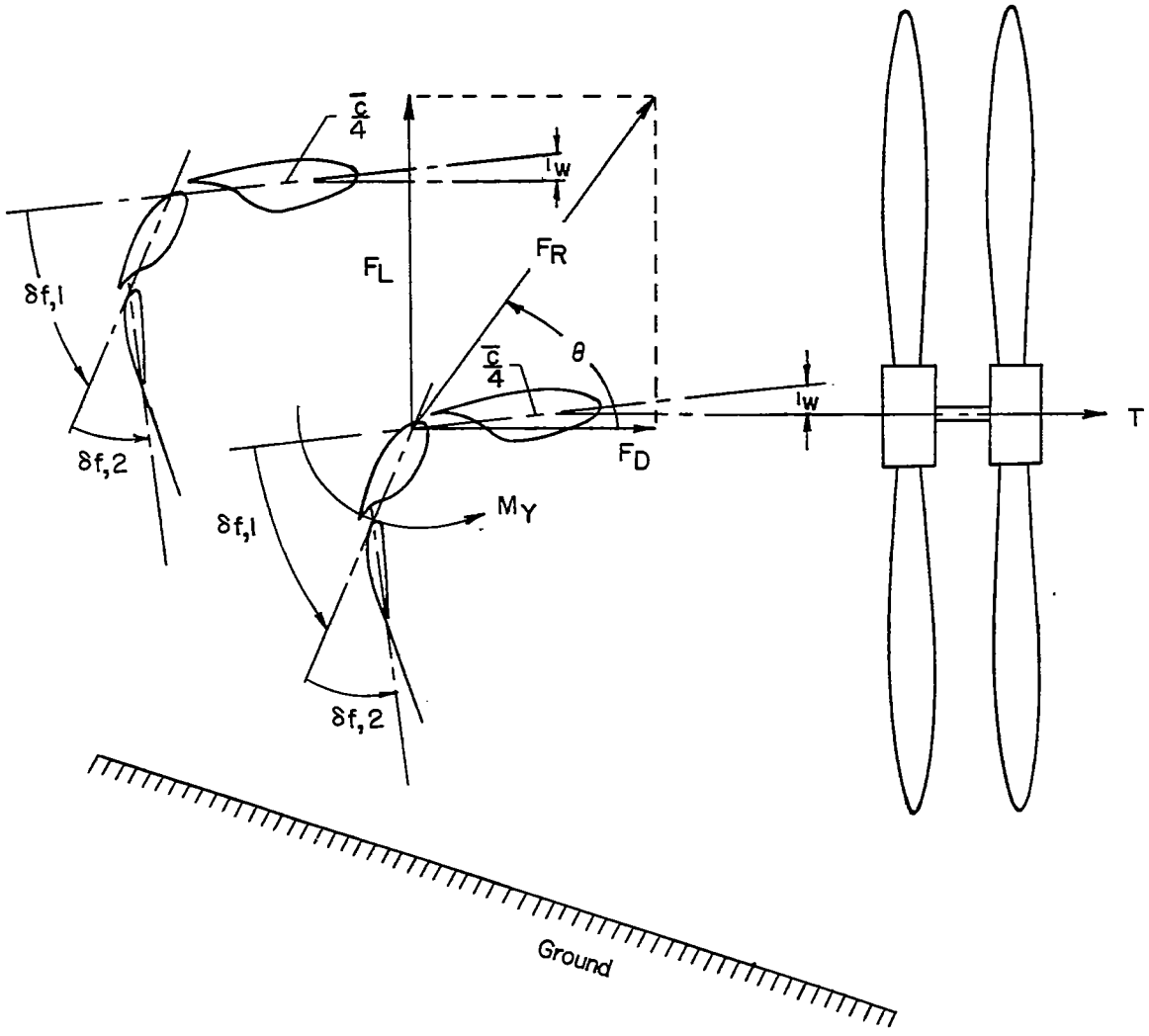

Figure 1.- Conventions used to define positive sense of forces, moments, and angles.

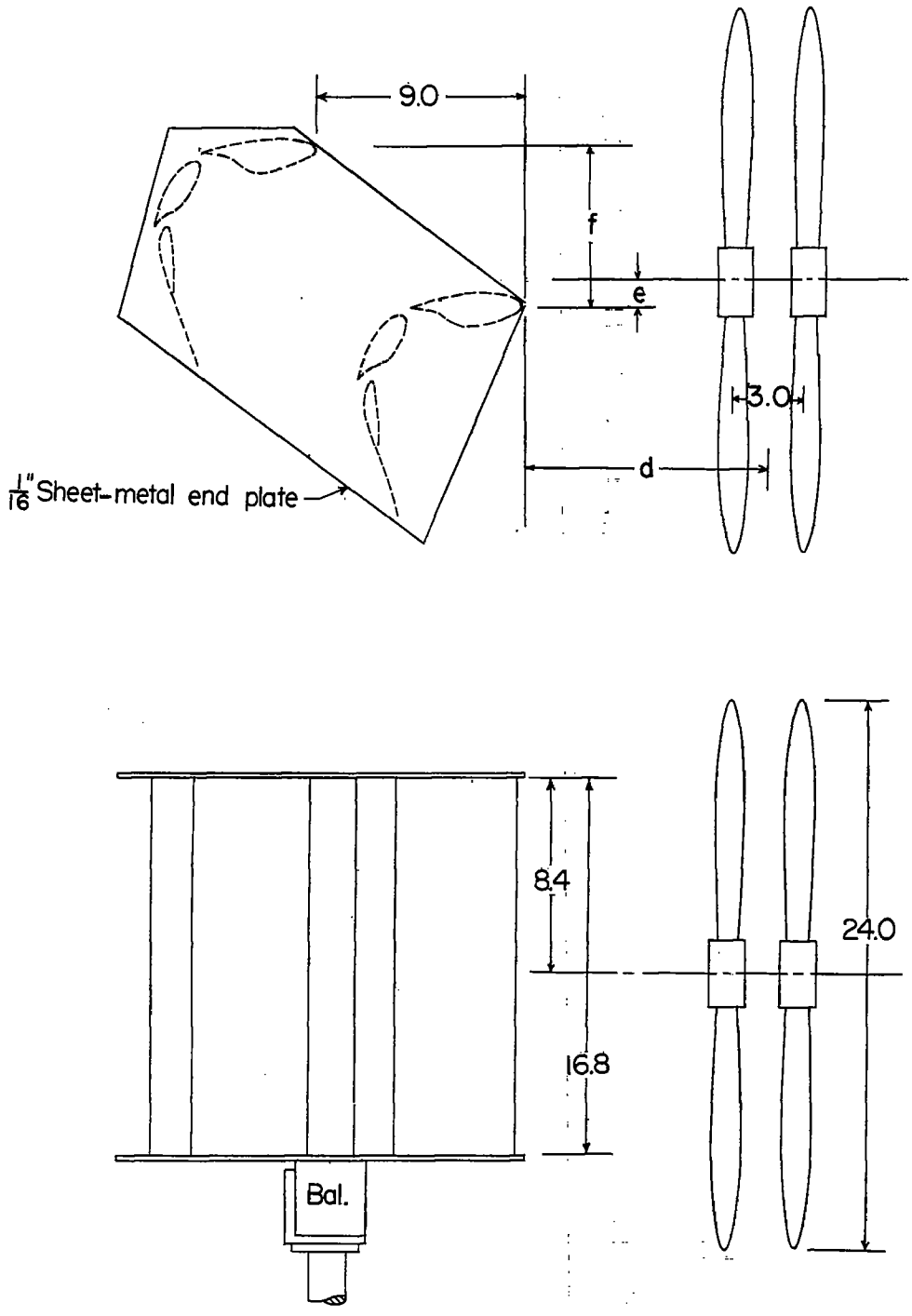

Figure 2.- Drawing of model. All dimensions are in inches.

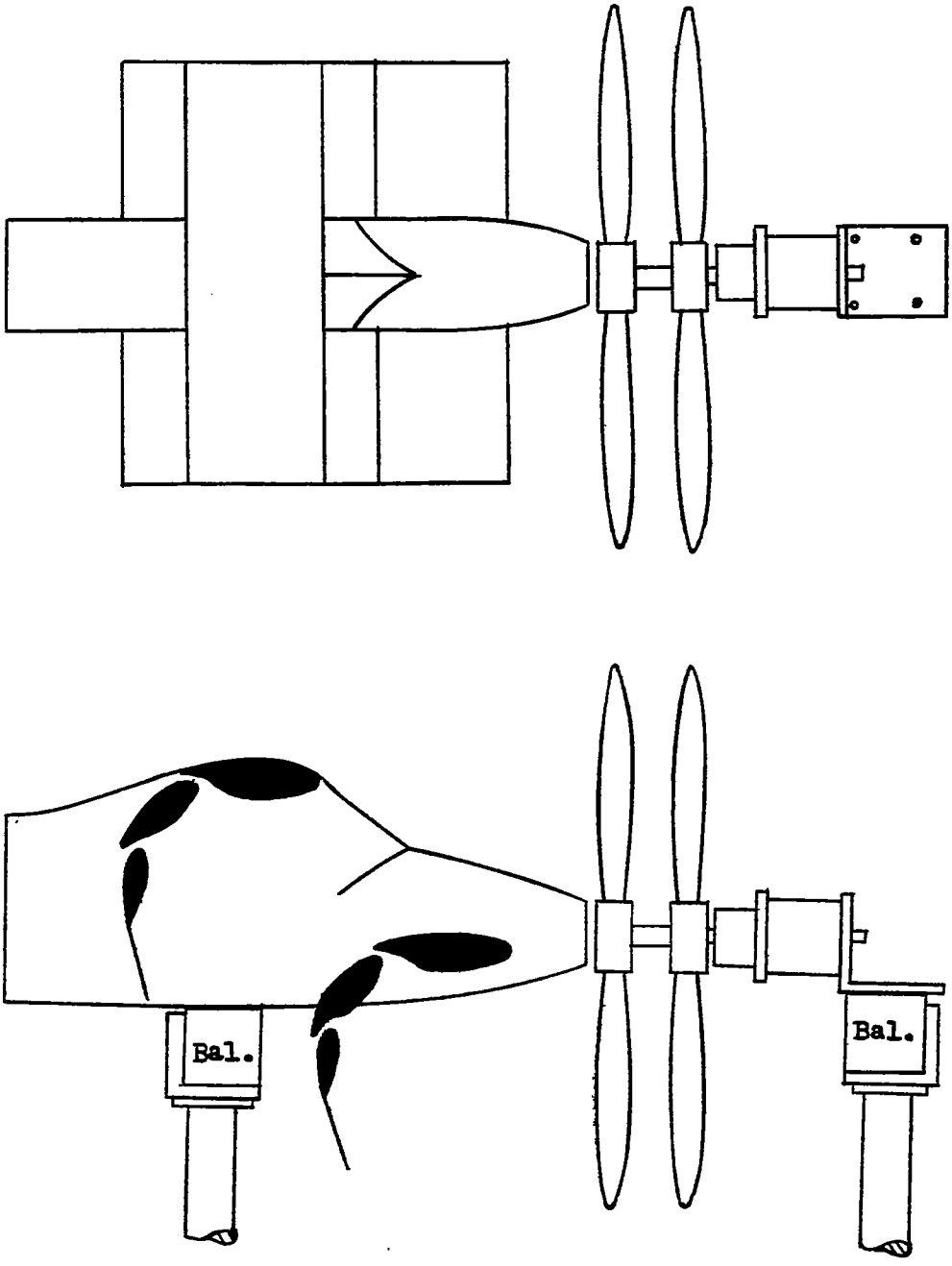

Figure 3.- Sketch of model with fuselage and chord-extensions.

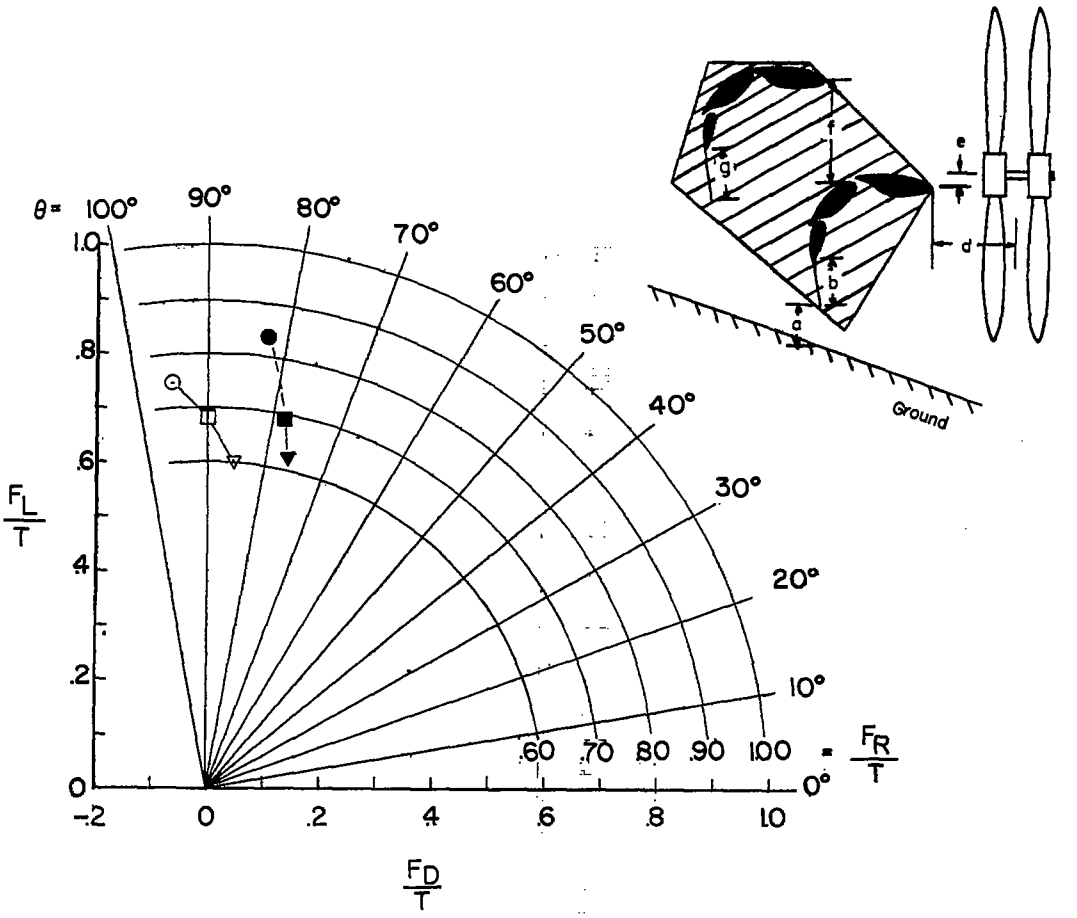

Symbols		Prop. dist., in.		Top-wing dist., in.	Chord-ext., in.		Fuselage width, in.	End plates	M_Y/TD	
no ground	ground at 4 in. a	d	e	f	b	g			no ground	ground at 4 in. a
○	●	4.0	1.0	8.0	5.5	5.5	none	large	-0.13	-0.11
□	■	4	1	8	5.5	5.5	5	large	-.16	-.15
▽	▼	4	1	8	5.5	5.5	6	large	-.14	-.14

Figure 4.- Effect of fuselage. $\delta_{f,1} = 60^\circ$; $\delta_{f,2} = 30^\circ$.

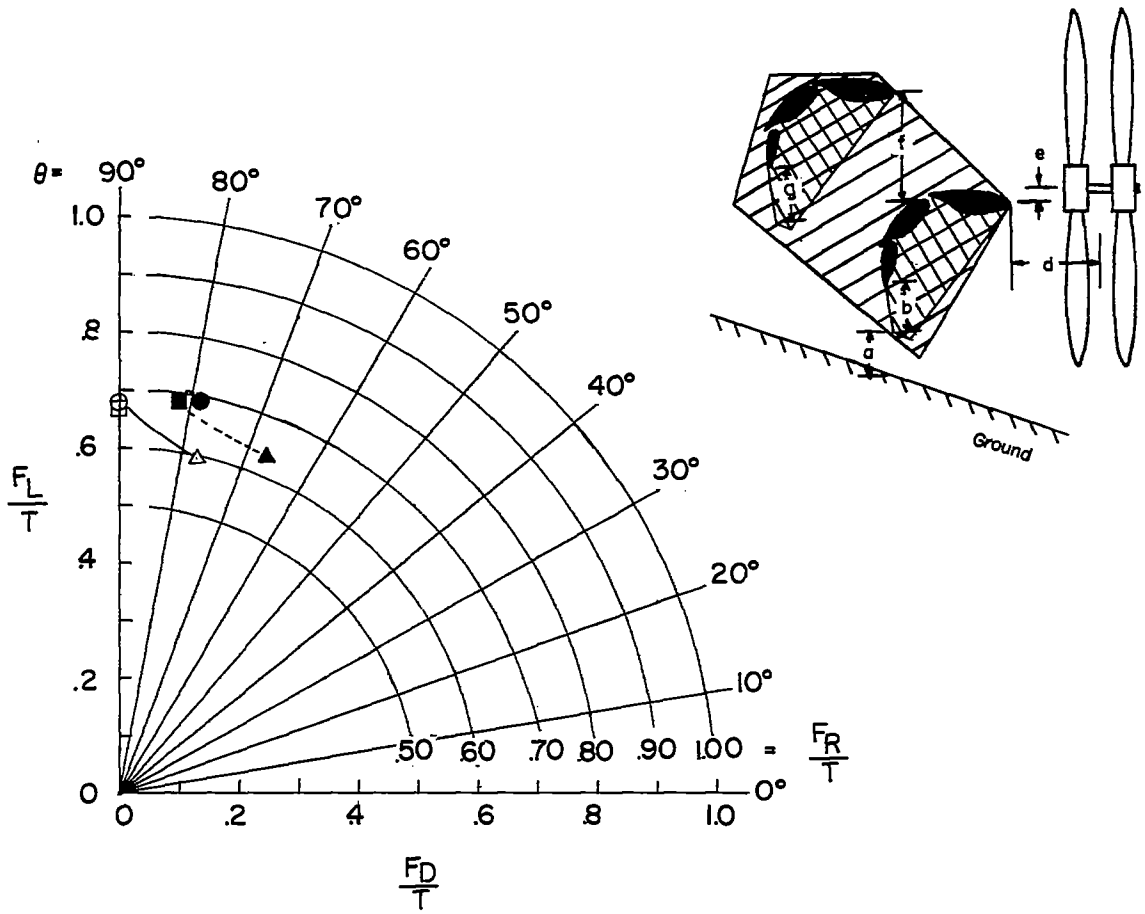

Symbols		Prop dist., in.		Top-wing dist., in.	Chord-ext., in.		Fuselage width, in.	End plates	M_Y/TD	
no ground	ground at 4 in. a	d	e	f	b	g			no ground	ground at 4 in. a
○	●	4.0	1.0	8.0	5.5	5.5	5.0	large	-0.16	-0.15
□	■	4	1	8	5.5	5.5	5	small	- .16	- .15
△	▲	4	1	8	5.5	5.5	5	none	- .13	- .12

Figure 5.- Effect of end plates. $\delta_{f,1} = 60^\circ$; $\delta_{f,2} = 30^\circ$.

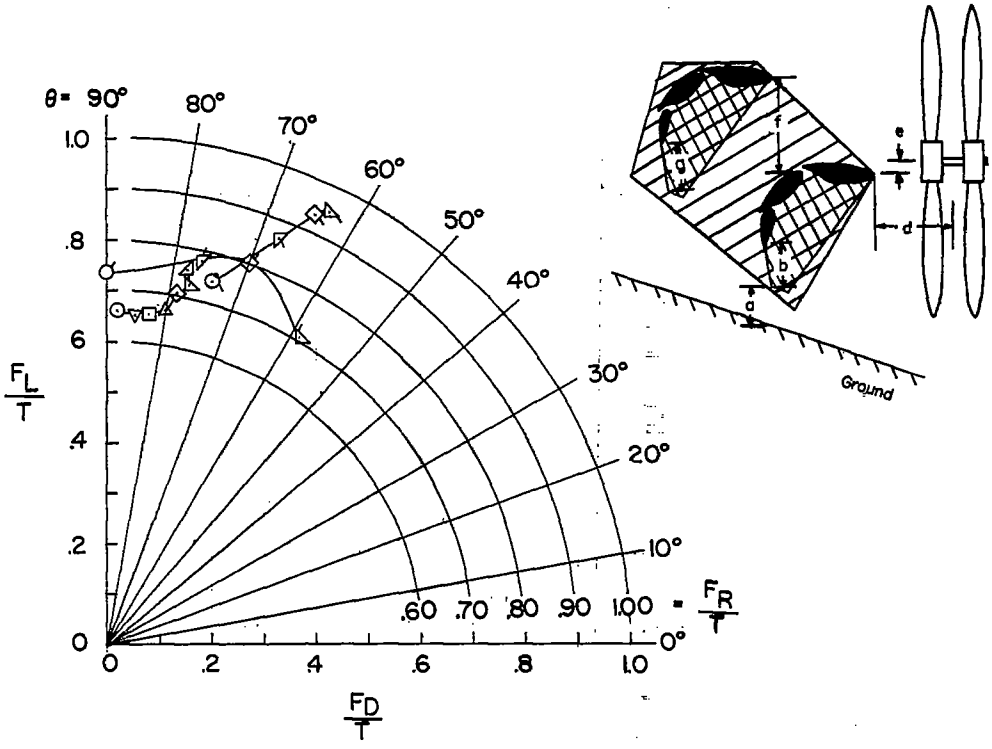

Symbol	Ground in. a	Ground angle, deg	Chord-ext., in. b	Chord-ext., in. g	Prop. dist., in. d	Prop. dist., in. e	Top-wing dist., in. f	Fuselage width, in.	End plates	Flap angles bottom wing, deg	Flap angles top wing, deg	$\frac{M_Y}{TD}$
○	∞	0	5.5	5.5	4.0	1.0	8.0	5.0	small	60 - 30	60 - 30	-0.14
▽	18	5	5.5	5.5	4	1	8	5	small	60 - 30	60 - 30	-.14
□	12	10	5.5	5.5	4	1	8	5	small	60 - 30	60 - 30	-.13
△	8	10	5.5	5.5	4	1	8	5	small	60 - 30	60 - 30	-.13
◇	4	10	5.5	5.5	4	1	8	5	small	60 - 30	60 - 30	-.13
▷	2	15	5.5	5.5	4	1	8	5	small	60 - 30	60 - 30	-.13
◿	3/8	15	5.5	5.5	4	1	8	5	small	60 - 30	60 - 30	-.14
○	∞	0	5.5	5.5	10	0	9	none	large	60 - 30	60 - 30	-.11
▽	6	15	5.5	5.5	10	0	9	none	large	60 - 30	60 - 30	-.09
◇	4	20	5.5	5.5	10	0	9	none	large	60 - 30	60 - 30	-.09
◺	2	30	5.5	5.5	10	0	9	none	large	60 - 30	60 - 30	-.08
○	∞	0	5.5	5.5	10	0	9	none	large	60 - 30	40 - 30	-.12
▽	6	25	5.5	5.5	10	0	9	none	large	60 - 30	40 - 30	-.12
◇	4	25	5.5	5.5	10	0	9	none	large	60 - 30	40 - 30	-.13
◺	2	30	5.5	5.5	10	0	9	none	large	60 - 30	40 - 30	-.13

(a) Three test configurations.

Figure 6.- Effect of ground proximity.

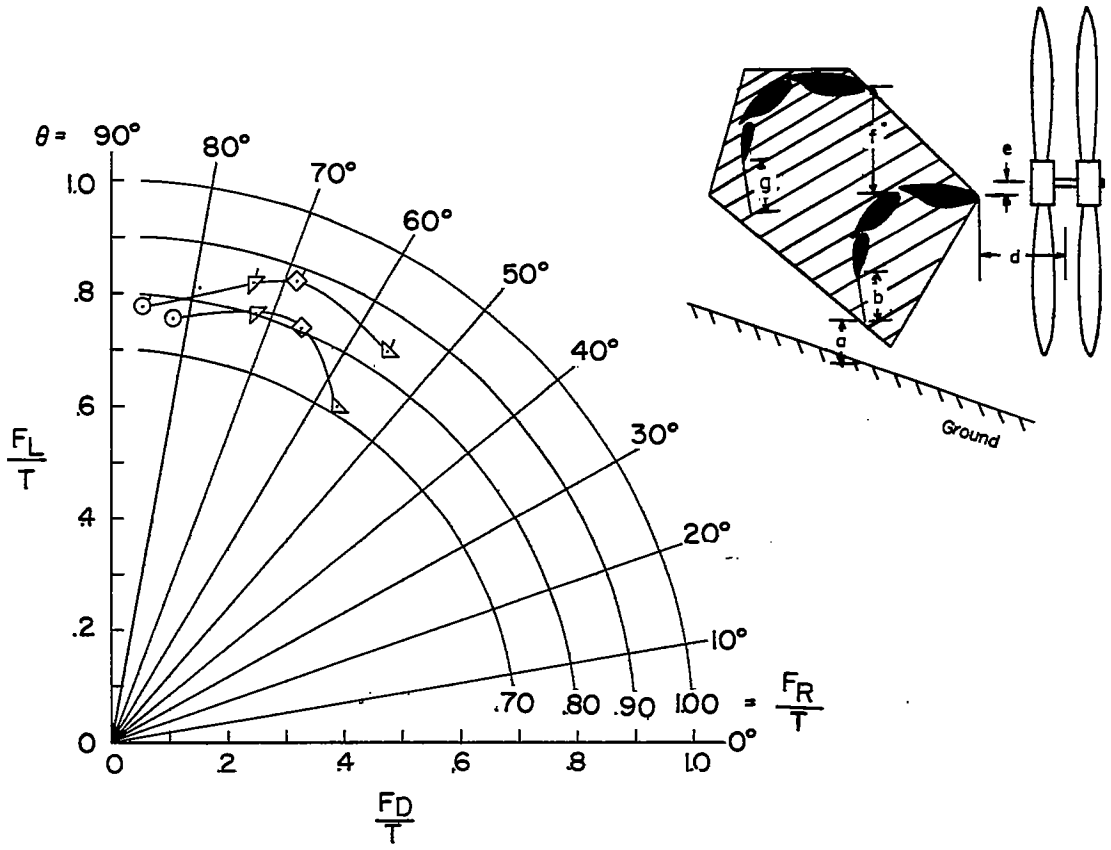

Symbol	Ground		Chord-ext., in.		Prop. dist., in.		Top-wing dist., in.	Fuselage width, in.	End plates	$\frac{M_Y}{TD}$
	in.	angle, deg								
	a		b	g	d	e	f			
○	∞	0	4.5	4.5	10.0	-1.0	7.0	none	large	-0.06
▽	6	20	4.5	4.5	10	-1	7	none	large	-.06
◇	4	25	4.5	4.5	10	-1	7	none	large	-.07
◺	2	30	4.5	4.5	10	-1	7	none	large	-.07
○	∞	0	4.5	4.5	10	0	7	none	large	-.11
▽	6	20	4.5	4.5	10	0	7	none	large	-.16
◇	4	25	4.5	4.5	10	0	7	none	large	-.11
◺	2	30	4.5	4.5	10	0	7	none	large	-.11

(b) Two additional test configurations. $\delta_{f,1} = 60^\circ$; $\delta_{f,2} = 30^\circ$.

Figure 6.- Concluded.

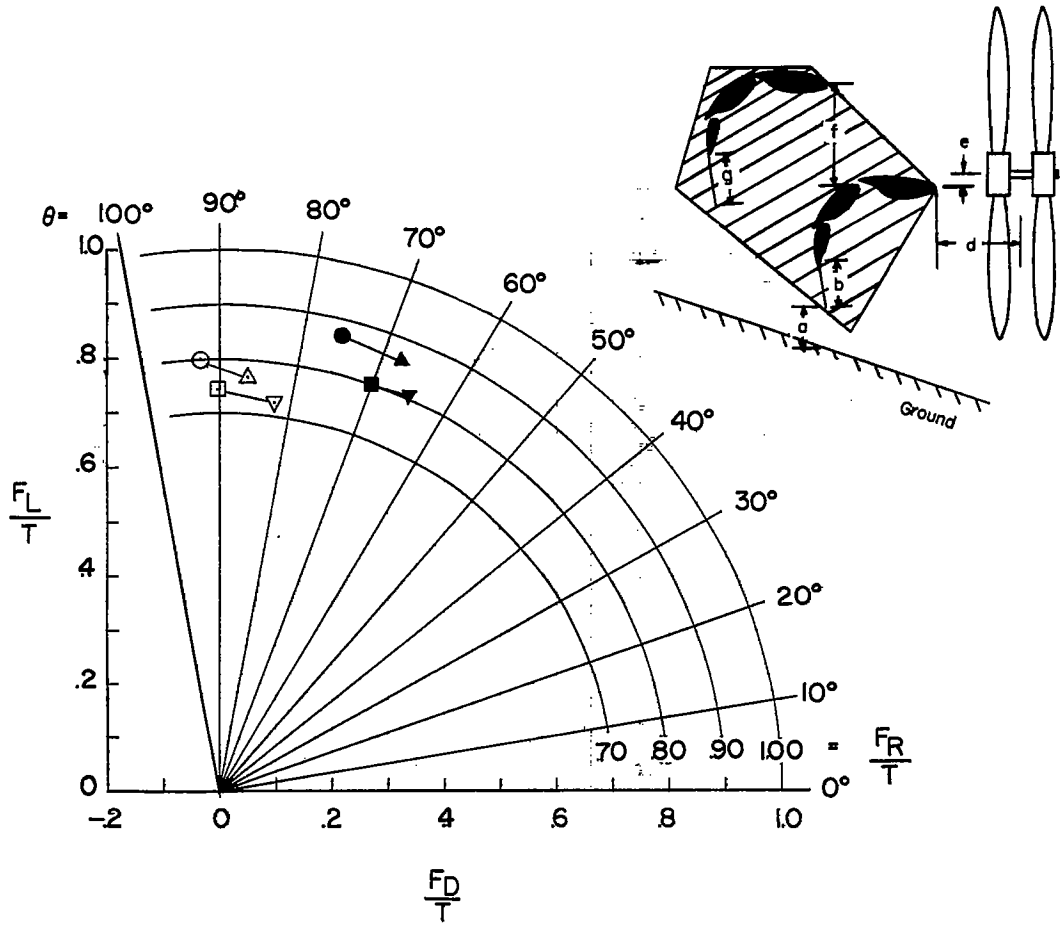

Symbols		Prop dist., in.		Top-wing dist, in.	Chord-ext., in.		Fuselage width, in.	End plates	M_Y/TD	
no ground	ground at 4 in. a	d	e	f	b	g			no ground	ground at 4 in. a
○	●	10.0	0	7.0	5.5	5.5	none	large	-0.13	-0.13
△	▲	10.	0	7	4.5	4.5	none	large	-.11	-.12
□	■	10	0	9	5.5	5.5	none	large	-.10	-.09
▽	▼	10	0	9	4.5	4.5	none	large	-.08	-.08

(a) Effect of 1-inch reduction in chord.

Figure 7.- Effect of chord length. $\delta_{f,1} = 60^{\circ}$; $\delta_{f,2} = 30^{\circ}$.

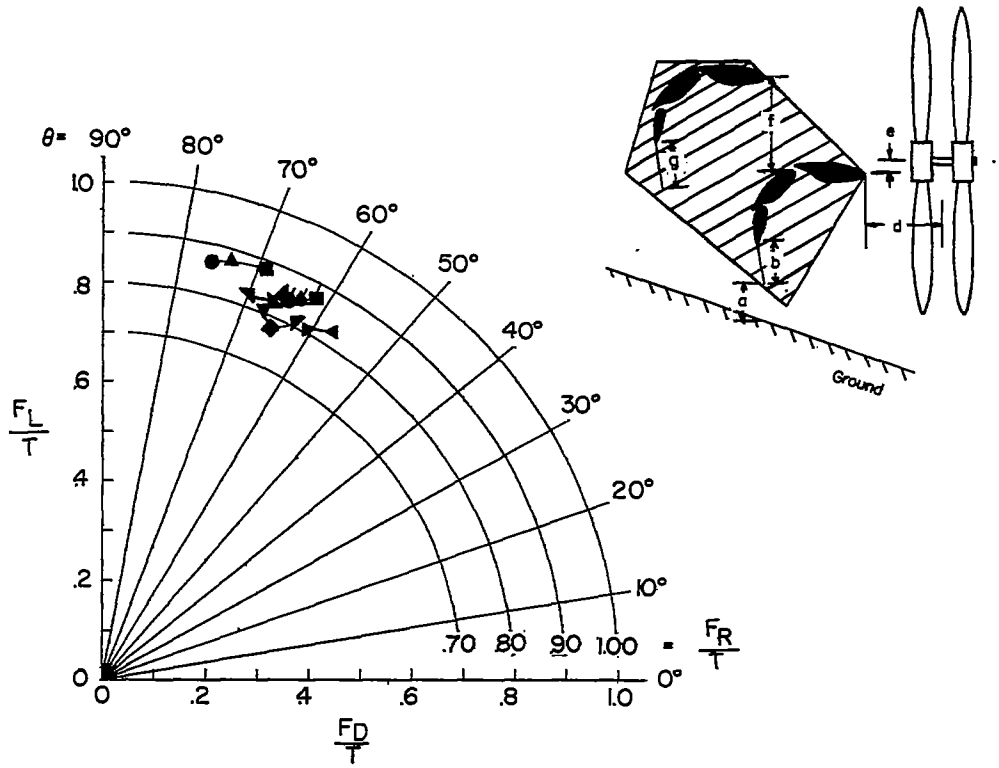

Symbols ground at 4 in. a	Prop. dist., in. d	e	Top-wing dist., in. f	Chord-ext., in. b	g	Fuselage width, in.	End plates	$\frac{M_Y}{TD}$
●	10.0	0	7.0	5.5	5.5	none	large	-0.13
▲	10	0	7	5.5	4.0	none	large	-.12
■	10	0	7	5.5	3.0	none	large	-.12
▼	10	-1.0	7	5.0	4.0	none	large	-.07
◆	10	-1.0	7	4.5	4.5	none	large	-.06
◤	10	-1.0	7	4.0	4.0	none	large	-.07
◥	10	1.0	7	5.0	4.0	none	large	-.16
◣	10	1.0	7	4.0	4.0	none	large	-.15
◢	10	1.0	7	4.0	3.0	none	large	-.15
▶	10	1.0	6	4.0	3.0	none	large	-.15
◀	10	1.0	6	4.0	0	none	large	-.16
●	10	0	6	5.0	3.0	none	large	-.12
▲	10	0	6	5.0	0	none	large	-.13
■	10	0	6	4.0	0	none	large	-.11

(b) Additional test configurations.

Figure 7.- Concluded.

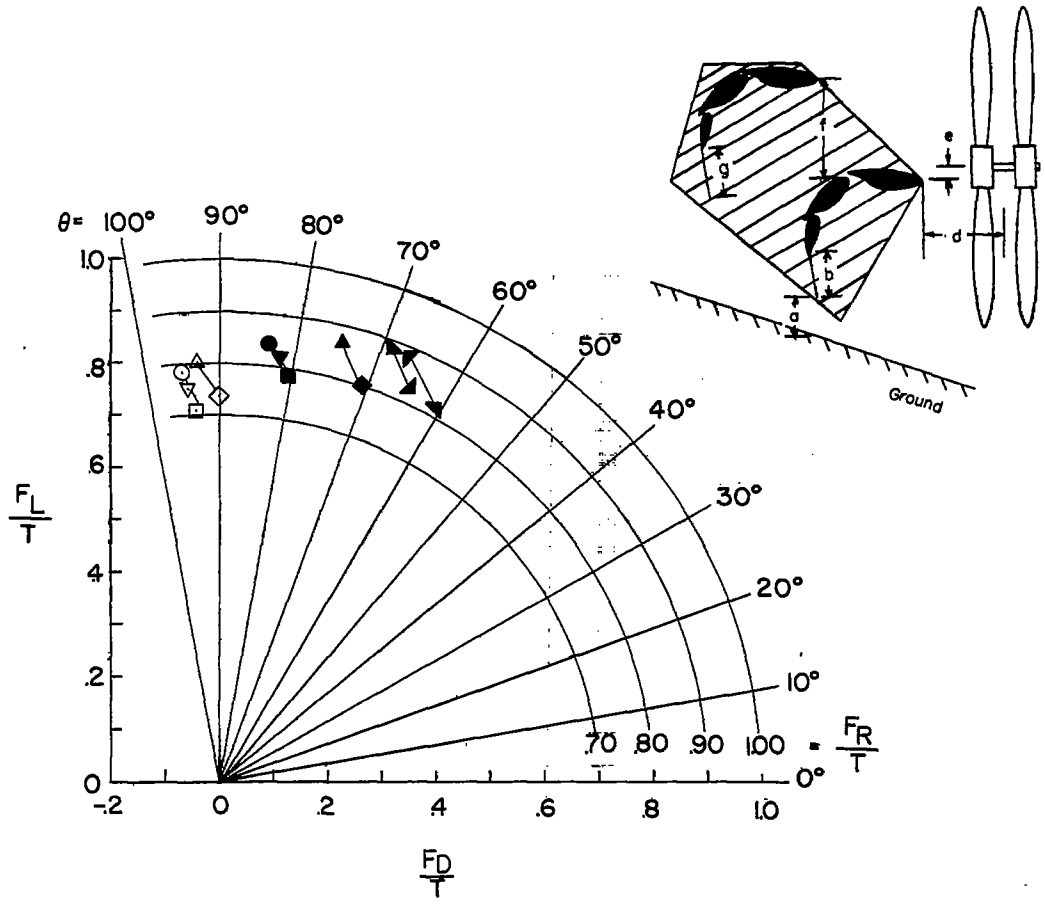

Symbols		Prop. dist., in.		Top-wing dist., in.	Chord-ext., in.		Fuselage width, in.	End plates	M_Y/TD	
no ground	ground at 4 in. a	d	e	f	b	g			no ground	ground at 4 in. a
○	●	4.0	0	7.0	5.5	5.5	none	large	-0.14	-0.13
▽	▼	4	0	8	5.5	5.5	none	large	-.13	-.11
□	■	4	0	9	5.5	5.5	none	large	-.11	-.09
△	▲	10	0	7	5.5	5.5	none	large	-.13	-.13
◇	◆	10	0	9	5.5	5.5	none	large	-.10	-.09
	◣	10	0	7	5.0	3.0	none	large		-.12
	◢	10	0	6	5.0	3.0	none	large		-.12
	◤	10	1	7	4.0	3.0	none	large		-.16
	◥	10	1	6	4.0	3.0	none	large		-.15

Figure 8.- Effect of top-wing position. $\delta_{f,1} = 60^{\circ}$; $\delta_{f,2} = 30^{\circ}$.

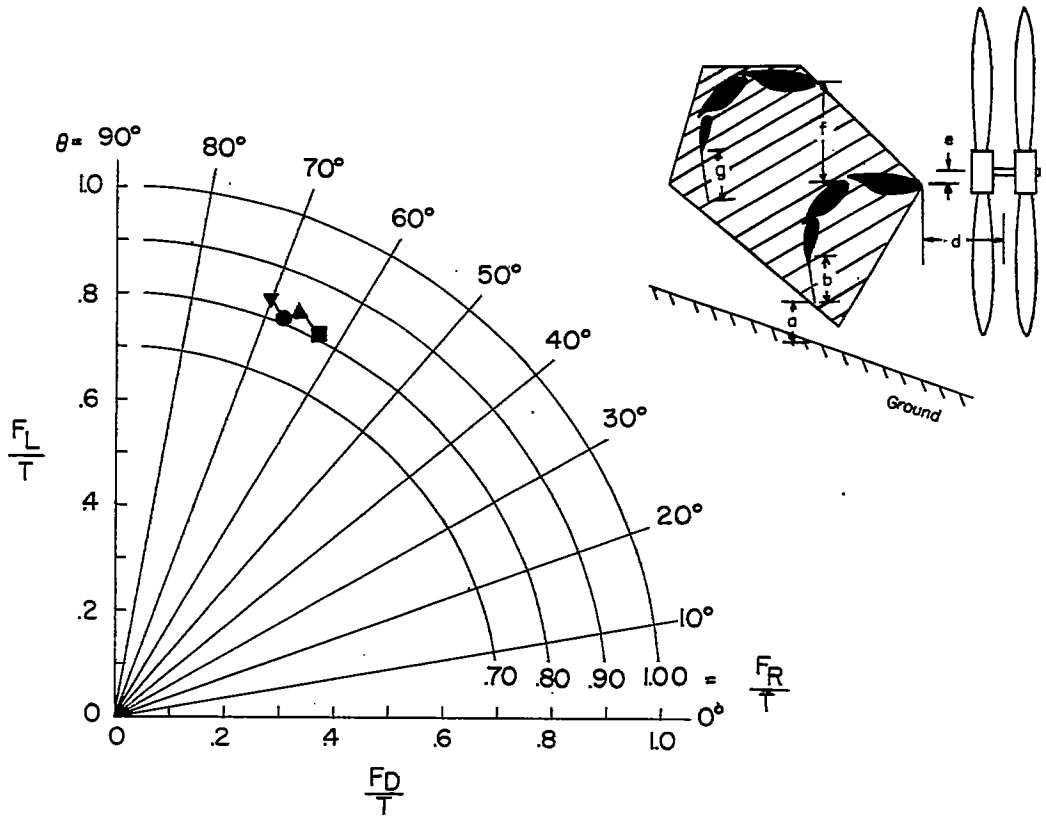

Symbols	Prop. dist., in.		Top-wing dist., in.	Chord-ext., in.		Fuselage width, in.	End plates	$\frac{M_Y}{TD}$
ground at 4 in. a	d	e	f	b	g			
●	10.0	-1.0	7.0	5.0	4.0	none	large	-0.07
▼	10	1	7	5	4	none	large	-.16
■	10	-1	7	4	4	none	large	-.07
▲	10	1	7	4	4	none	large	-.15

Figure 9.- Effect of vertical position of propellers. $\delta_{f,1} = 60^{\circ}$; $\delta_{f,2} = 30^{\circ}$.

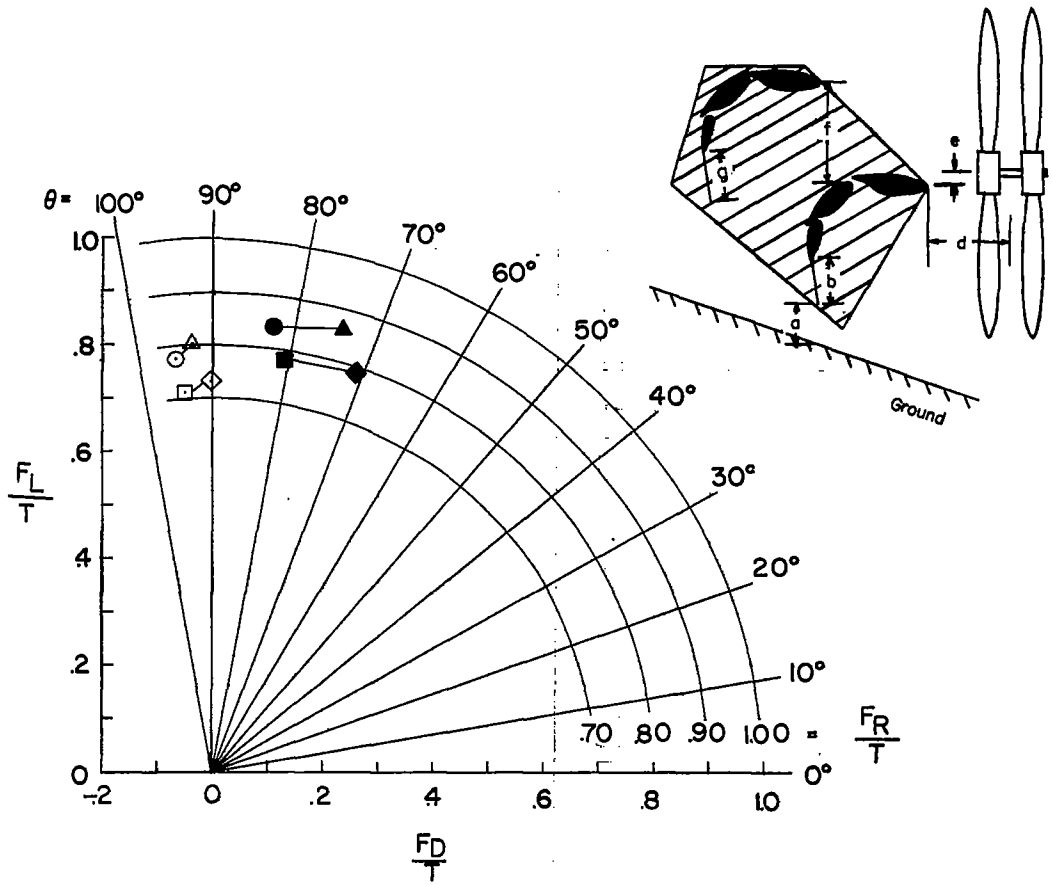

Symbols		Prop. dist., in.		Top-wing dist., in.	Chord-ext., in.		Fuselage width, in.	End plates	M_Y/TD	
no ground	ground at 4 in. a	d	e	f	b	g			no ground	ground at 4 in. a
○	●	4.0	0	7.0	5.5	5.5	none	large	-0.14	-0.13
△	▲	10	0	7	5.5	5.5	none	large	-.13	-.13
□	■	4	0	9	5.5	5.5	none	large	-.11	-.09
◇	◆	10	0	9	5.5	5.5	none	large	-.10	-.09

Figure 10.- Effect of horizontal position of propellers. $\delta_{f,1} = 60^\circ$; $\delta_{f,2} = 30^\circ$.

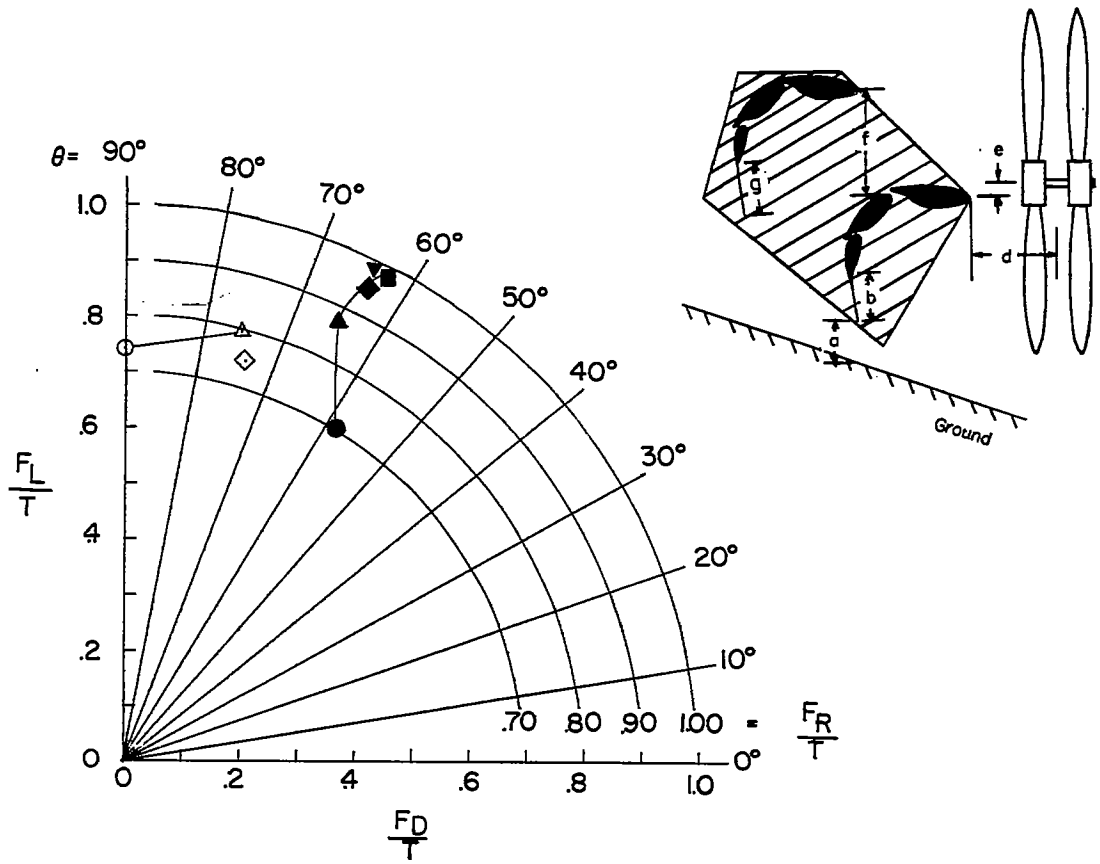

Symbols		Prop. dist., in.		Top-wing dist., in.	Chord-ext, in.		Fuselage width, in.	End plates	Flap angles		M_Y/TD	
no ground	ground at 2 in. a	d	e	f	b	g			bottom wing deg	top wing deg	no ground	ground at 2 in a
○	●	10.0	0	9.0	5.5	5.5	none	large	60-30	60-30	-0.10	-0.09
△	▲	10	0	9	5.5	5.5	none	large	50-30	50-30	-.08	- .10
	■	10	0	9	5.5	5.5	none	large	40-30	40-30		- .14
	▼	10	0	9	5.5	5.5	none	large	50-30	40-30		- .14
◇	◆	10	0	9	5.5	5.5	none	large	60-30	40-30	- .11	- .13

Figure 11.- Effect of flap deflection.

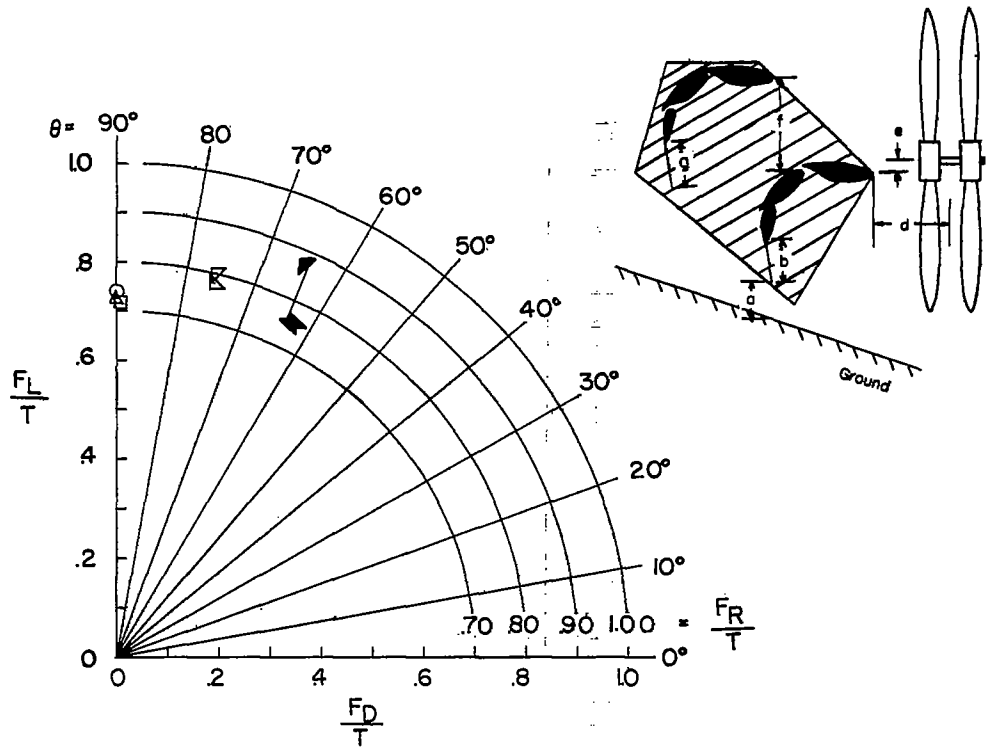

Symbols		Prop. dist., in.		Top-wing dist., in.	Chord-ext., in.		Fuselage width, in.	End plates	Wings with slots taped	Flap angles, both wings deg.	M_Y/TD	
no ground	ground at 2 in. a	d	e	f	b	g					no ground	ground at 2 in. a
○		10.0	0	9.0	5.5	5.5	none	large	none	60 - 30	-0.10	
△		10	0	9	5.5	5.5	none	large	top	60 - 30	-.10	
□		10	0	9	5.5	5.5	none	large	both	60 - 30	-.10	
◸	◤	10	0	9	5.5	5.5	none	large	none	50 - 30	-.07	-.10
◸	◥	10	0	9	5.5	5.5	none	large	top	50 - 30		-.07
◺	◣	10	0	9	5.5	5.5	none	large	both	50 - 30	-.08	-.07

Figure 12.- Effect of sealing the slots on the wings.