REPORT 1297

NONLIFTING WING-BODY COMBINATIONS WITH CERTAIN GEOMETRIC RESTRAINTS HAVING MINIMUM WAVE DRAG AT LOW SUPERSONIC SPEEDS [1]

By Harvard Lomax

SUMMARY

Several variational problems involving optimum wing and body combinations having minimum wave drags for different kinds of geometrical restraints are analyzed. Particular attention is paid to the effect on the wave drag of shortening the fuselage and, for slender axially symmetric bodies, the effect of fixing the fuselage diameter at several points or even of fixing whole portions of its shape.

INTRODUCTION

Recently several authors have used linearized theory to study the wave drag of wing-body combinations traveling at supersonic speeds (see, e. g., refs. 1 to 5). These studies have clearly demonstrated the importance of finding the wave drag of a whole airplane rather than the separate wave drags of its various parts (wings, fuselages, etc.), since the magnitude of the interference terms can predominate. In effect, this means that various optimization problems for bodies—such as the problem of finding the body shape having a minimum wave drag for a given volume—should be re-examined when interfering wings or other bodies are in the same flow field. In many cases the solution to the new problem differs from the body-alone problem only in interpretation.

The purpose of this report is to study minimum wave-drag combinations which satisfy a few of the many possible geometric restraints pertinent to the interests of airplane designers. An attempt has been made to analyze the various problems in a unified manner so that extensions to other kinds of restraints can be deduced.

LIST OF IMPORTANT SYMBOLS

A	aspect ratio
$a_0(x)$	source distribution equivalent to wing in sense defined by equation (3)
$a_n(x)$	multipole distribution of order n
D	wave drag
D_n	portion of drag due to all the nth order multipoles for $n>0$
D_w, D_{wb}, D_b	See equation (8).
D_{re}	additional drag resulting from restraint (See eq. (11).)
J_0, J_1	restraints defined in equations (19)
$L_0'+L_0$	distance between apexes on x axis of forecone and aftercone enclosing wing (See fig. 3.)
$l_0'+l_0$	length of basic body
$l_1'+l_1$	length of modification to basic body
M	Mach number
q	$\frac{\rho_\infty U_\infty^2}{2}$
R	average body radius
$S_f(x)$	fuselage area in cross section normal to the free stream
$S_w(x,\theta)$	normal (to free stream) projection of wing area in section cut by plane $x_1=x+\beta y_1 \cos\theta$ (See fig. 2.)
U_∞	speed of free stream
V	volume
x, y, z	Cartesian coordinate system (See fig. 1.)
$\alpha_0(x)$	source distribution representing the fuselage modifications
β	$\sqrt{M^2-1}$
θ	polar coordinate (See fig. 1.)
ρ_∞	free-stream density
σ	See equation (17).
φ	velocity potential

BASIC THEORY AND ASSUMPTIONS

BASIC THEORY

Many of the discussions and derivations contained in the following are carried out on the assumption that the reader is familiar with the concepts presented in reference 4 which should be considered as a first part to this report. In particular, an acquaintance with the solutions to the wave equation referred to as "multipoles" is assumed, together with Hayes' invariance principle and the consequent multipole distributions equivalent to a wing in the sense that both induce the same momentum spectrum at infinity.

The entire analysis used herein is based on the assumptions and idealizations necessary to develop the linearized equation for the velocity potential, φ, in supersonic flow, namely

$$\beta^2\varphi_{xx}-\varphi_{yy}-\varphi_{zz}=0 \tag{1}$$

where $\beta^2=M^2-1$ and the reference coordinate system [2] is shown in figure 1. The analysis is further restricted to the solution of problems involving a given uncambered and untwisted wing mounted centrally on a vertically symmetrical fuselage, the entire configuration being at zero angle of attack.

[1] Supersedes NACA TN 3667, "Wing-Body Combinations With Certain Geometric Restraints Having Low Zero-Lift Wave Drag at Low Supersonic Mach Numbers," by Harvard Lomax 1956.

[2] It should be stressed that the x axis is parallel to the free-stream direction (wind axes).

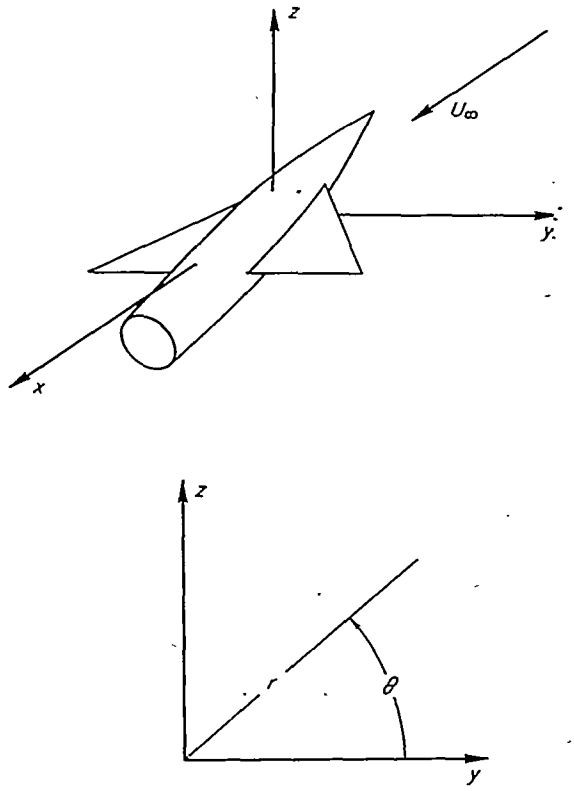

FIGURE 1.—Coordinate systems used in analysis.

ADDITIONAL ASSUMPTIONS

We now make the two additional assumptions: one, the value of βA, where A is the wing aspect ratio, is small; and two, the value of $\beta R/L_e$, where R is the average body radius and $2L_e$ is the distance along the x axis in which the multipole strengths differ significantly from zero, is small.

One can evaluate the significance of these assumptions by studying their implications relative to the multipole distributions used to simulate the wing and body. Suppose, for example, a group of nth order multipoles is placed along the body center line, their strengths, $C_n(x)$, being fixed by the condition that a circular cylinder in the vicinity of the body is a stream surface when the velocity field induced by these multipoles is combined with the velocity field induced by the source sheets representing the given wing. With the assumptions of small βA and $\beta R/L_e$ mentioned above, the C_n's, for n greater than 0, can be shown (see, e. g., ref. 4) to have a negligible effect on the wave drag. Hence, all the multipoles (for $n>0$) that combine with the wing to make a circular cylinder a stream surface and any additional multipoles (for $n>0$) added to make the body have mild distortions from such a surface are negligible in evaluating the wave drag. Therefore, under the assumptions mentiond above, out of all the singularities distributed along the body axis, it is necessary, in studying the wave drag, to consider only the sources (multipoles for which $n=0$).

With the restrictions to small values of $\beta R/L_e$ and mild body distortion (see Ward, ref. 6, for a discussion of orders of magnitude), slender-body theory can be used to calculate the body shape, and on the basis of this theory one can show (see ref. 4, Appendix B) that $S_f(x)$, the body cross-sectional area measured normal to the free stream, is completely determined by the axial source distribution alone. Hence, if only the exposed panels of the wing are used to calculate the C_n's, C_0 is negligible and the entire axial source distribution $\alpha_0(x)$ is related to the geometrical properties of the body by the relation

$$\alpha_0(x)=U_\infty \frac{dS_f}{dx}=U_\infty S_f'(x) \tag{2}$$

THE WING EQUIVALENT SOURCE DISTRIBUTION AND THE OPTIMUM CANCELLATION SOURCES

Let the given wing lie in the $z_1=0$ plane. According to Hayes' theorem (ref. 7), the wing equivalent source distribution $[a_0(x)]_w$ is obtained by accumulating on the x_1 axis, at a distance x from the origin, all the wing sources intercepted by the line $x_1=x+\beta y_1\cos\theta$, and then, for a fixed x, averaging these values as θ varies from 0 to 2π. Thus using thin-airfoil theory to relate the planar source sheet to wing geometry, one finds

$$\frac{1}{U_\infty}a_0(x)=\frac{1}{2\pi}\int_0^{2\pi} S_w'(x,\theta)d\theta \tag{3}$$

where $S_w'(x,\theta)=\partial/\partial x[S_w(x,\theta)]$ and $S_w(x,\theta)$ is the normal (to the x axis) projection of the wing cross-sectional area intercepted by the plane [3] $x_1=x+\beta y_1\cos\theta$ as shown in figure 2. Without the addition of further restraints, the optimum source distribution along the x_1 axis is that which just cancels the wing equivalent source distribution. Further, this can be interpreted directly in terms of both fuselage and wing

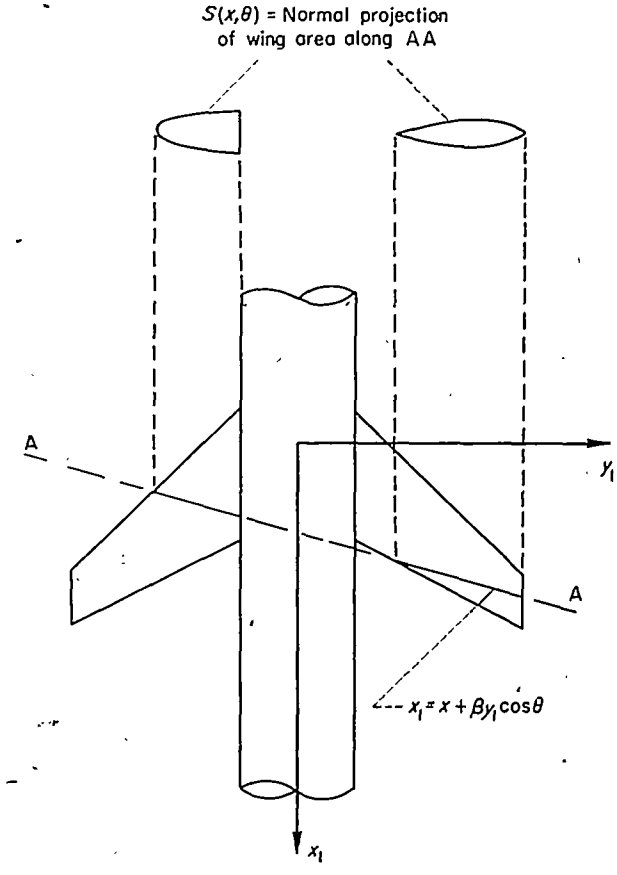

FIGURE 2.—Area intercepted by oblique plane.

[3] The true oblique plane is given by the equation

$$x_1=x+\beta y_1\cos\theta+\beta z_1\sin\theta$$

but, to be consistent with the assumptions basic to linearized theory, the variation with z_1 is neglected.

geometry by means of equations (2) and (3). Thus, with no further restraints, the best fuselage shaping, for a wing-body combination satisfying the assumptions discussed above, satisfies the equation

$$S_f'(x)=-\frac{1}{2\pi}\int_0^{2\pi} S_w'(x,\theta)d\theta \tag{4}$$

and has any reasonably smooth cross-sectional form. Notice that the total volume taken out of the fuselage is exactly equal to the total volume of the exposed portion of the wing. Hence, the total volume of the modified combination is the same as that of the original smooth cylinder.

THE DRAG

The total wave drag of a system can be expressed in terms of its actual or equivalent multipole distributions as

$$D=2D_0+\sum_1^\infty D_n \tag{5}$$

where D_n is the drag caused by the nth order multipoles $a_n(x)$ and is given by the equation

$$\frac{D_n}{q}=-\frac{\beta^{2n}}{4\pi U_\infty^2}\int_{-L_0'}^{L_0} dx_1 \int_{-L_0'}^{L_0} dx_2 a_n^{(n+1)}(x_1)\, a_n^{(n+1)}(x_2) \ln|x_1-x_2| \quad \text{for } n=0,1,2\ldots \tag{6}$$

where $a_n^{(n+1)}(x)$ represents $(\partial/\partial x)^{n+1}a_n(x)$. Under the assumptions given above, the magnitude of $\sum_1^\infty D_n$ is small. Let us designate it by D_e, so that, in general,

$$D=2D_0+D_e \tag{7}$$

On the other hand, the total wave drag of a system composed of the combination of a wing and a body can also be written symbolically as

$$D=D_w+2D_{wb}+D_b \tag{8}$$

where

D_w drag of the wing alone
D_b drag of the body alone
$2D_{wb}$ interference drag

The various components of wave drag defined in equations (7) and (8) help one to evaluate more readily the drag reductions that can be realized from appropriate fuselage shapings. Thus, if the fuselage shape satisfies equation (4), the total wave drag of the combination under the assumptions that βA and $\beta R/L_e$ are small can be written either as

$$D=D_e \tag{9}$$

or as

$$D=D_w-D_b \tag{10}$$

If, in finding the fuselage shape,

(a) the multipoles representing a wing and a body flying separately are assumed to represent the same wing and body when combined (i. e., the shape fields can be superimposed),

(b) the multipoles representing the fuselage are equal in magnitude but opposite in sign to the wing equivalent multipoles,

then equation (10) holds without the assumption of small βA and $\beta R/L_e$.

In subsequent problems we will discuss the effects on the wave drag and fuselage area distribution of adding certain additional restraints to the body geometry. The addition of such restraints may or may not change the relation given by equation (10), but they must always add a term to equation (9) so that

$$\left.\begin{aligned} D&=D_e+D_{re}\\ D_{re}&\geq 0\end{aligned}\right\} \tag{11}$$

WINGS CENTRALLY MOUNTED ON SLENDER QUASICYLINDERS

This section is devoted to the solution of two problems involving a given uncambered and untwisted wing mounted centrally at zero angle of attack on a tube that is cylindrical forward of some point ahead of the wing. The problems are, in both cases, to find the area distribution of the fuselage behind the cylindrical portion that will minimize the wave drag of the combination.

SHORTENING THE FUSELAGE

Remembering the assumptions listed at the beginning of this section, let us consider the following problem:

(i) Given a wing and a slender fuselage having the same normal cross-sectional area in all planes ahead of the plane $x=-L_0'$ (see fig. 3), what is the optimum fuselage area distribution behind the plane $x=-L_0'$ if the fuselage must end at the plane $x=l_0$?

Of course, if $l_0\geq L_0$ (i. e., the body modification can extend over the entire range enclosed by the forecone and aftercone enclosing the wing), the solution is already given by equation (4). Hence, in the following, $l_0<L_0$.

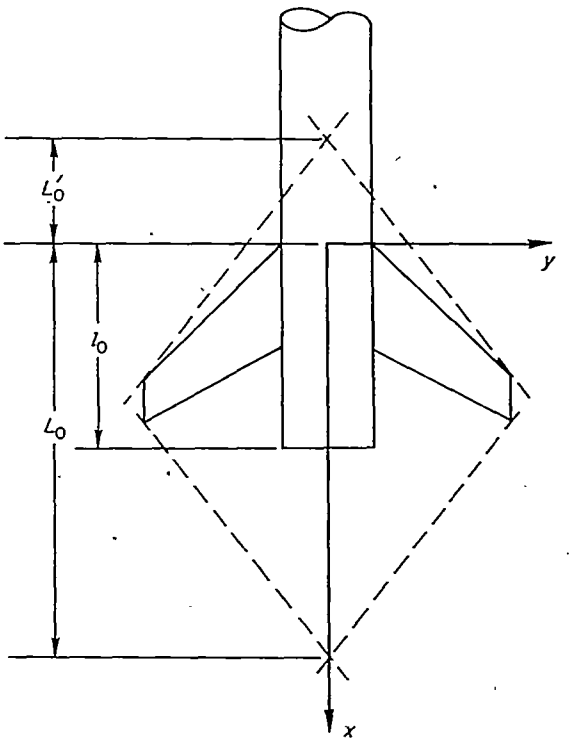

FIGURE 3.—Wing on limited fuselage.

For simplicity of notations, let $\alpha_0(x)$ represent the sources along the fuselage center line and $a_0(x)$ represent the wing equivalent source distribution. Then, according to equation (6)

$$\frac{D_0}{q}=-\frac{1}{4\pi U_\infty^2}\int_{-L_0'}^{L_0}dx_1\int_{-L_0'}^{L_0}dx_2[a_0'(x_1)+\alpha_0'(x_1)][a_0'(x_2)+\alpha_0'(x_2)]\ln|x_1-x_2| \quad (12)$$

where from the conditions stated in the problem and the geometric interpretation to the fuselage sources given by equation (2), $\alpha_0(x)$ is zero for values of x outside the interval[4] $-L_0'<x<l_0$.

Consider now a variation of equation (12) for a fixed $a_0(x)$ in the interval $-L_0'\leq x\leq L_0$ and a free variation of $\alpha_0(x)$ in the subinterval $-L_0'<x<l_0$. There results

$$\frac{1}{q}\delta D_0=-\frac{2}{4\pi U_\infty^2}\int_{-L_0'}^{l_0}dx_1\delta\alpha_0'(x_1)\left[\int_{-L_0'}^{L_0}a_0'(x_2)\ln|x_1-x_2|dx_2+\int_{-L_0'}^{l_0}\alpha_0'(x_2)\ln|x_1-x_2|dx_2\right]=0$$

Integrate once by parts with respect to x_1 (since the variations $\delta\alpha_0(-L_0')$ and $\delta\alpha_0(l_0)$ must be zero). Then, by the fundamental lemma of the calculus of variations, the bracketed term must be zero for $-L_0'\leq x_1\leq l_0$ and one finds the condition

$$\int_{-L_0'}^{L_0}\frac{a_0'(x_2)dx_2}{x_1-x_2}+\int_{-L_0'}^{l_0}\frac{\alpha_0'(x_2)dx_2}{x_1-x_2}=0;\qquad -L_0'\leq x_1\leq l_0 \quad (13)$$

Equation (13) is an integral equation which can be inverted (by methods such as those outlined in ref. 8). Inverting, integrating once with respect to x, and expressing $\alpha_0(x)$ and $a_0(x)$ by means of equations (2) and (3), respectively, one finds

$$S_f'(x)=-\frac{1}{2\pi}\int_0^{2\pi}S_w'(x,\theta)d\theta+\frac{\sqrt{(l_0-x)(L_0'+x)}}{2\pi^2}\int_{l_0}^{L_0}dx_1\int_0^{2\pi}d\theta\frac{S_w'(x_1,\theta)}{(x_1-x)\sqrt{(L_0'+x_1)(x_1-l_0)}} \quad (14)$$

which gives the optimum fuselage area distribution under the conditions and assumptions posed.

The wave drag of the combination represented by equation (14) can be expressed either in the terms defined in equation (8) or (11). Let us first consider the form given by equation (8). If the expression for the drag of an nth order multipole distribution is integrated once by parts, there results since $a_n^{(n+1)}(-L_0')=a_n^{(n+1)}(L_0)=0$

$$\frac{D_n}{q}=\frac{\beta^{2n}}{4\pi U_\infty^2}\int_{-L_0'}^{L_0}a_n^{(n)}(x_1)dx_1\int_{-L_0'}^{L_0}\frac{a_n^{(n+1)}(x_2)dx_2}{x_1-x_2}$$

Using this expression, one can show that equations (8) and (12) yield

$$\frac{D_{wb}}{q}=\frac{1}{2\pi U_\infty^2}\int_{-L_0'}^{L_0}a_0(x_1)dx_1\int_{-L_0'}^{l_0}\frac{\alpha_0'(x_2)dx_2}{x_1-x_2}=\frac{1}{2\pi U_\infty^2}\int_{-L_0'}^{l_0}\alpha_0(x_1)dx_1\int_{-L_0'}^{L_0}\frac{a_0'(x_2)dx_2}{x_1-x_2}$$

so that, by equation (13)

$$\frac{D_{wb}}{q}=-\frac{1}{2\pi U_\infty^2}\int_{-L_0'}^{l_0}\alpha_0(x_1)dx_1\int_{-L_0'}^{l_0}\frac{\alpha_0'(x_2)dx_2}{x_1-x_2}=-\frac{D_b}{q}$$

Hence, for any combination satisfying equation (14), once again

$$D=D_w-D_b$$

On the other hand, D_{re}, the increase in drag caused by shortening the fuselage, can also be obtained. Integrating equation (12) by parts, one has (note $D_{re}=2D_0$)

$$\frac{D_{re}}{q}=\frac{1}{2\pi U_\infty^2}\int_{-L_0'}^{L_0}[a_0(x_1)+\alpha_0(x_1)]dx_1\int_{-L_0'}^{L_0}\frac{[a_0'(x_2)+\alpha_0'(x_2)]dx_2}{x_1-x_2}$$

Combined with equation (13), this becomes

$$\frac{D_{re}}{q}=\frac{1}{2\pi U_\infty^2}\int_{l_0}^{L_0}a_0(x_1)dx_1\int_{-L_0'}^{L_0}\frac{a_0'(x_2)+\alpha_0'(x_2)}{x_1-x_2}dx_2$$

The derivative of equation (14) with respect to x gives

$$a_0'(x)+\alpha_0'(x)=\frac{-1}{\pi\sqrt{(l_0-x)(L_0'+x)}}\int_{l_0}^{L_0}\frac{a_0'(x_1)\sqrt{(L_0'+x_1)(x_1-l_0)}}{x-x_1}dx_1;\qquad -L_0'\leq x\leq l_0$$

so

$$\frac{D_{re}}{q}=\frac{1}{2\pi U_\infty^2}\int_{l_0}^{L_0}a_0(x_1)dx_1\left[\int_{l_0}^{L_0}\frac{a_0'(x_2)dx_2}{x_1-x_2}+\frac{1}{\pi}\int_{-L_0'}^{l_0}\frac{dx_2}{(x_1-x_2)\sqrt{(L_0'+x_2)(l_0-x_2)}}\int_{l_0}^{L_0}\frac{a_0'(x_3)\sqrt{(L_0'+x_3)(x_3-l_0)}}{x_2-x_3}dx_3\right]$$

which reduces to

$$\frac{D_{re}}{q}=\frac{1}{2\pi U_\infty^2}\int_{l_0}^{L_0}a_0(x_1)dx_1\int_{l_0}^{L_0}\frac{a_0'(x_2)}{x_1-x_2}\sqrt{\frac{(L_0'+x_2)(x_2-l_0)}{(L_0'+x_1)(x_1-l_0)}}dx_2 \quad (15a)$$

or, alternately,

$$\frac{D_{re}}{q}=\frac{-1}{2\pi U_\infty^2}\int_{l_0}^{L_0}\int_{l_0}^{L_0}a_0'(x_1)a_0'(x_2)\ln\frac{|x_1-x_2|(l_0+L_0')}{[\sqrt{(x_1+L_0')(x_2-l_0)}+\sqrt{(x_2+L_0')(x_1-l_0)}]^2}dx_1dx_2 \quad (15b)$$

CONSTRAINED FUSELAGE AREAS

Another class of problems is that in which the magnitude of the fuselage area is fixed at various points. Suppose, for example, that a fuselage shaped according to equation (4) had in some region a cross-sectional area too small to be

[4] It is necessary, for equation (6) to be valid, that $\alpha_0(-L_0')$ and $\alpha_0(l_0)$ be zero. This implies that $\alpha_0(x)$ must be continuous and if the body shape is given by equation (2), this, in turn means that the streamwise gradient of body cross-sectional area must be continuous. It was pointed out in reference 4 that $a_0(-L_0')$ and $a_0(L_0)$ will both be zero if the wing has no blunt edges along which the normal component of the freestream Mach number is unity or greater.

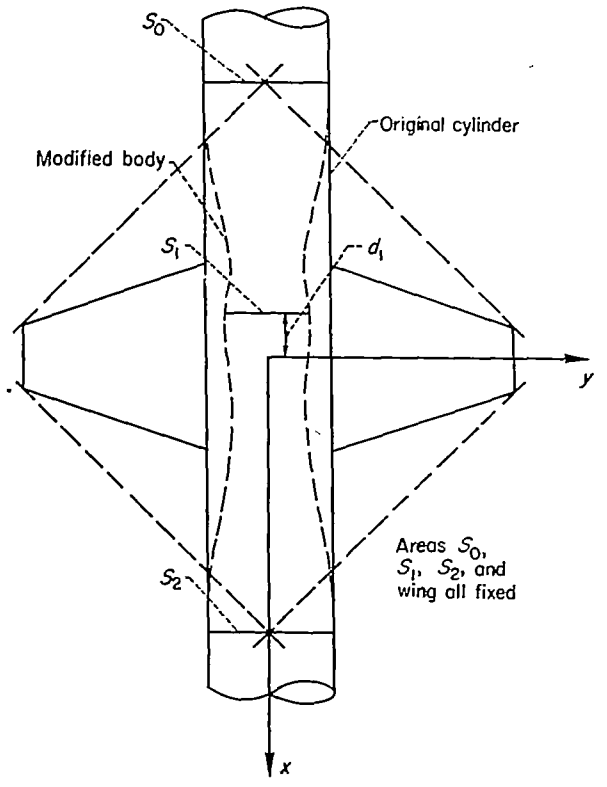

FIGURE 4.—Wing mounted on fuselage restrained at three sections.

acceptable for some practical purpose. The question is, then, what is the best shape for given values of minimum fuselage cross-section area at given planes and what is the penalty in wave drag caused by the added constraints? Before considering the general case of an arbitrary number of restraints, let us first consider the simple problem:

(ii) Given a wing, what (under the various assumptions given above) is the area distribution of the adjoining fuselage which has a prescribed area at three given stations (the initial, the final, and an intermediate station $x=d_1$, see fig. 4) and yields a minimum wave drag for the combination?

As before, let $a_0(x)$ represent the wing equivalent source distribution. Then the drag caused by the restraints can be written

$$\frac{D_{re}}{q}=\frac{1}{2\pi U_\infty^2}\int_{-L_0}^{L_0}[a_0(x_1)+U_\infty S_f'(x_1)]dx_1\int_{-L_0}^{L_0}\frac{a_0'(x_2)+U_\infty S_f''(x_2)}{x_1-x_2}dx_2 \tag{16}$$

where $S_f(x)$ is the unknown fuselage area to be optimized. For simplicity, replace the unknown $S_f(x)$ by $\sigma(x)$ where

$$\left.\begin{aligned}\sigma(x)&=\int_{-L_0}^{x}\frac{a_0(\xi)}{U_\infty}d\xi+S_f(x)=\frac{1}{2\pi}\int_0^{2\pi}S_w(x,\theta)d\theta+S_f(x)\\ \sigma(-L_0)&=S_0\\ \sigma(L_0)&=S_2\end{aligned}\right\} \tag{17}$$

Let

$$\left.\begin{aligned}\sigma_0(x)&=\sigma(x); \quad -L_0\leq x\leq d_1\\ \sigma_1(x)&=\sigma(x); \quad d_1\leq x\leq L_0\end{aligned}\right\} \tag{18}$$

and the restraints on the fuselage area give the relations

$$\int_{-L_0}^{d_1}\sigma_0'(x)dx=\left[S_1-S_0+\frac{1}{2\pi}\int_0^{2\pi}S_w(d_1,\theta)d\theta\right]=J_0 \tag{19a}$$

$$\int_{d_1}^{L_0}\sigma_1'(x)dx=\left[S_2-S_1-\frac{1}{2\pi}\int_0^{2\pi}S_w(d_1,\theta)d\theta\right]=J_1-J_0 \tag{19b}$$

where J_0 and J_1 are constants fixed by the given constraints. Notice

$$J_1=(S_2-S_0) \tag{19c}$$

so the constant J_1 is a measure of the difference between the initial and final areas.

Using the usual variational techniques, we can write, for the quantity to be minimized,

$$\frac{D_{re}}{q}+\frac{\rho_\infty\lambda_0}{4\pi}\int_{-L_0}^{d_1}\sigma_0'(x)dx+\frac{\rho_\infty\lambda_1}{4\pi}\int_{d_1}^{L_0}\sigma_1'(x)dx$$

or

$$\frac{\rho_\infty}{4\pi}\left\{\int_{-L_0}^{d_1}\sigma_0'(x_1)dx_1\left[\int_{-L_0}^{d_1}\frac{\sigma_0''(x_2)dx_2}{x_1-x_2}+\int_{d_1}^{L_0}\frac{\sigma_1''(x_2)dx_2}{x_1-x_2}+\lambda_0\right]+\right.$$
$$\left.\int_{d_1}^{L_0}\sigma_1'(x_1)dx_1\left[\int_{-L_0}^{d_1}\frac{\sigma_0''(x_2)dx_2}{x_1-x_2}+\int_{d_1}^{L_0}\frac{\sigma_1''(x_2)dx_2}{x_1-x_2}+\lambda_1\right]\right\}$$

By taking the variation and satisfying the conditions at the end points, one obtains the two simultaneous integral equations

$$\left.\begin{aligned}\int_{-L_0}^{d_1}\frac{\sigma_0''(x_2)dx_2}{x_1-x_2}+\int_{d_1}^{L_0}\frac{\sigma_1''(x_2)dx_2}{x_1-x_2}&=-\frac{\lambda_0}{2}; \quad -L_0<x_1<d_1\\ \int_{-L_0}^{d_1}\frac{\sigma_0''(x_2)dx_2}{x_1-x_2}+\int_{d_1}^{L_0}\frac{\sigma_1''(x_2)dx_2}{x_1-x_2}&=-\frac{\lambda_1}{2}; \quad d_1<x_1<L_0\end{aligned}\right\} \tag{20}$$

The set of equations (20) is identical to that analyzed by Adams (ref. 9) for bodies of revolution with fixed areas at the initial, final, and an intermediate section. In the interest of subsequent generalization, however, we will consider its solution in the following way: First write the equations (20) in the equivalent form

$$\int_{-L_0}^{L_0}\frac{\sigma''(x_2)dx_2}{x_1-x_2}=\begin{cases}-\frac{\lambda_0}{2}; & -L_0<x_1<d_1\\ -\frac{\lambda_1}{2}; & d_1<x_1<L_0\end{cases} \tag{21}$$

One can show that

$$\sigma''(x_2)=\frac{A+Bx_2}{\sqrt{L_0^2-x_2^2}}-C_1\cosh^{-1}\frac{L_0^2-d_1x_2}{L_0|x_2-d_1|} \tag{22}$$

is the solution to the integral equation (where A, B, and C_1 are constants) since

$$\int_{-L_0}^{L_0}\frac{\sigma''(x_2)dx_2}{x_1-x_2}=\begin{cases}-\pi\left[B-C_1\cos^{-1}\left(\frac{d_1}{L_0}\right)\right]; & -L_0<x_1<d_1\\ -\pi\left[B+C_1\cos^{-1}\left(\frac{-d_1}{L_0}\right)\right]; & d_1<x_1<L_0\end{cases} \tag{23}$$

which satisfies equation (21). The constraints can now be satisfied by means of the equations

$$\sigma'(x)=\int_{-L_0}^{x}\sigma''(x_1)dx_1=A\cos^{-1}\left(\frac{-x}{L_0}\right)-B\sqrt{L_0^2-x^2}+C_1\left[(d_1-x)\cosh^{-1}\frac{L_0^2-d_1x}{L_0|x-d_1|}-\sqrt{L_0^2-d_1^2}\cos^{-1}\left(\frac{-x}{L_0}\right)\right] \tag{24}$$

and

$$\sigma(x)-S_0=A\left[x\cos^{-1}\left(\frac{-x}{L_0}\right)+\sqrt{L_0^2-x^2}\right]-\frac{B}{2}\left[x\sqrt{L_0^2-x^2}+L_0^2\cos^{-1}\left(\frac{-x}{L_0}\right)\right]-\frac{C_1}{2}\left[(d_1-x)^2\cosh^{-1}\frac{L_0^2-d_1x}{L_0|x-d_1|}-\sqrt{L_0^2-d_1^2}(d_1-2x)\cos^{-1}\left(\frac{-x}{L_0}\right)+\sqrt{(L_0^2-d_1^2)(L_0^2-x^2)}\right] \tag{25}$$

Since $\sigma'(-L_0)=\sigma(L_0)=0$

$$A=C_1\sqrt{L_0^2-d_1^2}$$

and

$$J_0=-\frac{B}{2}\left[d_1\sqrt{L_0^2-d_1^2}+L_0^2\cos^{-1}\left(\frac{-d_1}{L_0}\right)\right]+\frac{C_1}{2}\sqrt{L_0^2-d_1^2}\left[d_1\cos^{-1}\left(\frac{-d_1}{L_0}\right)+\sqrt{L_0^2-d_1^2}\right]$$

$$J_1=-\frac{B}{2}L_0^2\pi+\frac{C_1}{2}\pi d_1\sqrt{L_0^2-d_1^2}$$

Solving for C_1 and B, we find

$$B=\frac{2}{\pi[L_0^2-d_1^2]^{3/2}}\left\{\pi d_1J_0-J_1\left[d_1\cos^{-1}\left(\frac{-d_1}{L_0}\right)+\sqrt{L_0^2-d_1^2}\right]\right\}$$

$$C_1=\frac{2}{\pi[L_0^2-d_1^2]^2}\left\{\pi L_0^2J_0-J_1\left[d_1\sqrt{L_0^2-d_1^2}+L_0^2\cos^{-1}\left(\frac{-d_1}{L_0}\right)\right]\right\}$$

From equation (25) the fuselage cross-sectional area can be written

$$S_f(x)=S_0-\frac{1}{2\pi}\int_0^{2\pi}S_w(x,\theta)d\theta+\frac{1}{\pi(L_0^2-d_1^2)^2}\left(\pi J_0\left[(L_0^2-d_1x)\sqrt{(L_0^2-x^2)(L_0^2-d_1^2)}-L_0^2(x-d_1)^2\cosh^{-1}\frac{L_0^2-d_1x}{L_0|x-d_1|}\right]+J_1\left\{(L_0^2-d_1^2)^2\cos^{-1}\left(\frac{-x}{L_0}\right)-\sqrt{(L_0^2-x^2)(L_0^2-d_1^2)}\left[\sqrt{L_0^2-d_1^2}(d_1-x)+(L_0^2-d_1x)\cos^{-1}\left(\frac{-d_1}{L_0}\right)\right]+(x-d_1)^2\left[d_1\sqrt{L_0^2-d_1^2}+L_0^2\cos^{-1}\left(\frac{-d_1}{L_0}\right)\cosh^{-1}\frac{L_0^2-xd_1}{L_0|x-d_1|}\right]\right\}\right) \tag{26}$$

In terms of the wing, body, and interference drag components defined in equation (8), the total wave drag is

$$\frac{D}{q}=\frac{D_w}{q}-\frac{D_b}{q}+(S_0-S_2)B+C_1\left[\pi S_1-S_0\cos^{-1}\left(\frac{d_1}{L_0}\right)-S_2\cos^{-1}\left(\frac{-d_1}{L_0}\right)\right] \tag{27a}$$

where B and C_1 are given above. The equation for D_{re} is

$$\frac{D_{re}}{q}=\frac{1}{\pi(L_0^2-d_1^2)}\left(\pi^2L_0^2J_0^2-2\pi J_0J_1\left[d_1\sqrt{L_0^2-d_1^2}+L_0^2\cos^{-1}\left(\frac{-d_1}{L_0}\right)\right]+J_1^2\left\{L_0^2-d_1^2+2d_1\sqrt{L_0^2-d_1^2}\cos^{-1}\left(\frac{-d_1}{L_0}\right)+L_0^2\left[\cos^{-1}\left(\frac{-d_1}{L_0}\right)\right]^2\right\}\right) \tag{27b}$$

If the additional specification is made that the initial and final areas are the same, the solution simplifies considerably, since, for such cases, $J_1=0$ and equations (26) and (27) reduce to

$$S_f(x)=S_0-\frac{1}{2\pi}\int_0^{2\pi}S_w(x,\theta)\,d\theta+\frac{1}{(L_0^2-d_1^2)^2}\left[S_1-S_0+\frac{1}{2\pi}\int_0^{2\pi}S_w(d_1,\theta)\,d\theta\right]\left[(L_0^2-d_1x)\sqrt{(L_0^2-x^2)(L_0^2-d_1^2)}-L_0^2(x-d_1)^2\cosh^{-1}\frac{L_0^2-d_1x}{L_0|x-d_1|}\right] \tag{28}$$

and

$$\frac{D}{q}=\frac{D_w}{q}-\frac{D_b}{q}+\frac{2\pi L_0^2}{(L_0^2-d_1^2)^2}(S_1-S_0)\left[S_1-S_0+\frac{1}{2\pi}\int_0^{2\pi}S_w(d_1,\theta)d\theta\right] \tag{29a}$$

$$\frac{D_{re}}{q}=\frac{\pi L_0^2}{(L_0^2-d_1^2)^2}\left[S_1-S_0+\frac{1}{2\pi}\int_0^{2\pi}S_w(d_1,\theta)\,d\theta\right]^2 \tag{29b}$$

Often the exact statement of the restraint is that $S(x)$ shall *not be less* than S_1 at $x=d_1$. In such cases care must be used in applying equations (26) and (27) or (28) and (29), since they are only valid when the fuselage cross-sectional area at d_1 is exactly S_1. If such is the case, equations (26) and (28) give the optimum body shape only if $J_0\geq 0$, that is, only if

$$S_1\geq S_0-\frac{1}{2\pi}\int_0^{2\pi}S_w(d_1,\theta)\,d\theta$$

Otherwise the optimum variation of area is given by equation (4).

Next let us generalize the analysis leading to equations (26) and (27) by considering the following problem:

(iii) Given a wing, what is the area distribution of the adjoining fuselage which has prescribed areas at $n+1$ stations (including the initial and final ones fixed by the Mach forecone and aftercone enveloping the wing, see fig. 5) and yields a minimum wave drag for the combination?

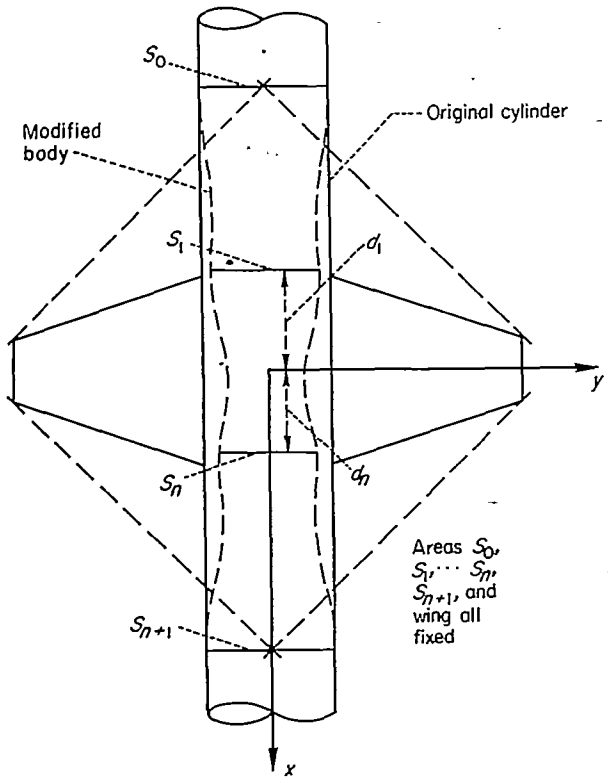

FIGURE 5.—Wing mounted on fuselage restrained at $n+2$ sections.

By analogy with equation (22), the integral equation for $\sigma''(x)$ (where $\sigma(x)$ is defined by eq. (17)) that must be satisfied for a minimum wave drag can be written at once in the form

$$\int_{-L_0}^{L_0} \frac{\sigma''(x_2)\,dx_2}{x_1-x_2}=\lambda_i;\ d_i<x_1<d_{i+1}, i=0,1,\ldots,n \tag{30}$$

where $d_0=-L_0$ and $d_{n+1}=L_0$. The quantity

$$\sigma''(x_2)=\frac{A+Bx_2}{\sqrt{L_0^2-x_2^2}}-\sum_1^n C_i \cosh^{-1}\frac{L_0^2-x_2d_i}{L_0|x_2-d_i|} \tag{31}$$

is a solution to equation (30) since it yields

$$\int_{-L_0}^{L_0}\frac{\sigma''(x_2)dx_2}{x_1-x_2}=-\pi\left[B+\sum_1^{\nu-1}C_i\cos^{-1}\left(\frac{-d_i}{L_0}\right)-\sum_\nu^n C_i\cos^{-1}\left(\frac{d_i}{L_0}\right)\right];$$
$$d_{\nu-1}<x_1<d_\nu,\ \nu=1,2,\ldots,n+1 \tag{32}$$

in which

$$\sum_{n+1}^n C_i\cos^{-1}\left(\frac{d_i}{L_0}\right)=0$$

Further, it is apparent from equations (24) and (25) that, with the conditions $\sigma'(-L_0)=\sigma'(L_0)=0$

$$\sigma'(x)=-B\sqrt{L_0^2-x^2}+\sum_1^n C_i(d_i-x)\cosh^{-1}\frac{L_0^2-xd_i}{L_0|x-d_i|} \tag{33}$$

and

$$S_f(x)=S_0-\frac{1}{2\pi}\int_0^{2\pi}S_w(x,\theta)d\theta-\frac{B}{2}\left[x\sqrt{L_0^2-x^2}+L_0^2\cos^{-1}\left(\frac{-x}{L_0}\right)\right]-\frac{1}{2}\sum_{i=1}^n C_i\left\{(d_i-x)^2\cosh^{-1}\frac{L_0^2-xd_i}{L_0|x-d_i|}-\sqrt{L_0^2-d_i^2}\left[d_i\cos^{-1}\left(\frac{-x}{L_0}\right)+\sqrt{L_0^2-x^2}\right]\right\} \tag{34}$$

The wave drag due to the restraints can be obtained by using equations (32) and (16). Thus

$$\frac{D_{re}}{q}=\frac{1}{2}B(\sigma_0-\sigma_{n+1})+\frac{1}{2}\sum_{i=1}^n C_i\left[\pi\sigma_i-\sigma_0\cos^{-1}\left(\frac{d_i}{L_0}\right)-\sigma_{n+1}\cos^{-1}\left(\frac{-d_i}{L_0}\right)\right] \tag{35a}$$

or in terms of the components defined in equation (8)

$$\frac{D}{q}=\frac{D_w}{q}-\frac{D_b}{q}+B(S_0-S_{n+1})+\sum_{i=1}^n C_i\left[\pi S_i-S_0\cos^{-1}\left(\frac{d_i}{L_0}\right)-S_{n+1}\cos^{-1}\left(\frac{-d_i}{L_0}\right)\right] \tag{35b}$$

where $\sigma_i=\sigma(d_i)$. Notice $\sigma_0=S_0$ and $\sigma_{n+1}=S_{n+1}$, so when $S_0=S_{n+1}$,

$$\frac{D_{re}}{q}=\frac{\pi}{2}\sum_{i=1}^n C_i(\sigma_i-S_0) \tag{35c}$$

or

$$\frac{D}{q}=\frac{D_w}{q}-\frac{D_b}{q}+\pi\sum_{i=1}^n C_i(S_i-S_0) \tag{35d}$$

Finally, using the known values of $S_f(x)$ at d_v, $v=0, 1, \ldots, n+1$, one obtains the $n+1$, simultaneous equations

$$(S_v-S_0)=-\frac{1}{2\pi}\int_0^{2\pi}S_w(d_v,\theta)d\theta-\frac{B}{2}\left[d_v\sqrt{L_0^2-d_v^2}+L_0^2\cos^{-1}\left(\frac{-d_v}{L_0}\right)\right]-\frac{1}{2}\sum_1^n C_i\left\{(d_i-d_v)^2\cosh^{-1}\frac{L_0^2-d_vd_i}{L_0|d_v-d_i|}-\sqrt{L_0^2-d_i^2}\left[d_i\cos^{-1}\left(\frac{-d_v}{L_0}\right)+\sqrt{L_0^2-d_v^2}\right]\right\};\ v=1,2,\ldots,n+1 \tag{36}$$

which determine the $n+1$ constants B, C_1, C_2, . . ., C_n. These, in turn, fix the shape, through equation (34), and the wave drag, through equations (35).

Solutions similar to the above are presented in references 10 and 11, and are used therein to calculate the drag of bodies of revolution having their areas specified at a given number of stations. Such a method has the advantage of giving the lower bound to the drag of bodies whose areas have been measured at a discrete number of places and, further, of giving a value representative of all area variations in the vicinity of the calculated optimum. Reference 10 contains a tabulation of the constants necessary to evaluate the minimum drag of an area distribution fixed at 19 points.

WINGS CENTRALLY MOUNTED ON SLENDER CLOSED BODIES OF REVOLUTION

In the preceding section the interference between the central portion of the airplane and its nose and tail regions was neglected. In this portion we will consider the entire

fuselage, assuming, first, it is a slender closed body and, second, it can be calculated in the presence of the wing, using the same postulates given in the previous section "Basic Theory and Assumptions."

UNLIMITED INDENTATION LENGTH, FIXED VOLUME

Let us first consider the question:

(iv) Given the wing, body length, and total volume of the combination, what is the area distribution of the body which yields a minimum wave drag if the apexes of the Mach forecone and aftercone enclosing the wing lie within the body (see fig. 6) and the specified volume is large enough for the body to be real?

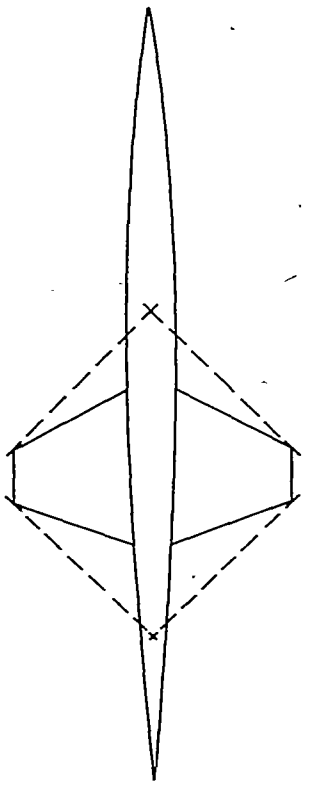

FIGURE 6.—Wing on closed body.

This problem can be solved in a simple manner by means of the following lemma discovered by R. T. Jones, see reference 1.

Designate the closed body which has a minimum wave drag for a fixed volume and length as a Sears-Haack body. Then the total drag of a Sears-Haack body and any other wing or (slender) body entirely within the fore and after Mach cones with apexes at the tail and nose of the Sears-Haack body, respectively, is given by the equation

$$D=D_{SH}\left(1+\frac{2V_1}{V_{SH}}\right)+D_1 \tag{37}$$

where

D_{SH} wave drag of Sears Haack body alone
D_1 wave drag of second body alone
V_{SH} volume of Sears-Haack body
V_1 volume of second body

A proof of this lemma can be obtained by placing the Sears-Haack source distribution and the wing equivalent multipole distributions (or the second body's equivalent multipole distribution) in equation (6). Since only the sources interfere, the drag can be written in the form

$$D=D_{SH}+\frac{q}{\pi U_\infty^2}\int_{-L_0'}^{L_0} a_{0_1}(x_1)dx_1\int_{-l_0}^{l_0}\frac{a_{0_{SH}}'(x_2)dx_2}{x_1-x_2}+D_1 \tag{38}$$

where the interference term has been integrated by parts and $-L_0'$, L_0, and $-l_0$, l_0 form bounds of the arbitrary and Sears-Haack source distributions, a_{0_1} and $a_{0_{SH}}$, respectively. As is well known

$$\frac{D_{SH}}{q}=\frac{8V_{SH}}{\pi l_0^4} \tag{39}$$

and

$$\frac{1}{U_\infty}a_{0_{SH}}'(x)=\frac{8V_{SH}}{\pi l_0^4}\frac{2x^2-l_0^2}{\sqrt{l_0^2-x^2}} \tag{40}$$

Placing equation (40) in (38) and integrating, one finds

$$D=D_{SH}-\frac{8qV_{SH}^2}{\pi l_0^4}\frac{2}{V_{SH}}\int_{-L_0'}^{L_0} x_1\frac{a_{0_1}(x_1)}{U_\infty}dx_1+D_1$$

and since one can easily show

$$V_1=-\frac{1}{U_\infty}\int_{-L_0'}^{L_0} x_1 a_{0_1}(x_1)dx_1$$

equation (37) follows immediately.

Returning now to problem (iv), we see that its solution follows from equation (37) and the solution is, in fact, simply a Sears-Haack body having, at the appropriate place relative to the wing-body juncture, the additional area variation specified by equation (4). This follows, since, if D_1 represents the combined drag of the wing and indentation, then V_1, the combination volume of the wing and indentation, is zero. Hence, the minimum value of D, for a given volume, is obtained when D_{SH} and D_1 are independently minimized. But D_{SH} is already a minimum on a volume basis and D_1 is a minimum for a given wing. Notice the location of the wing along the body is immaterial, provided the required indentation can be accommodated by the fuselage.

LIMITED INDENTATION LENGTH ON SEAR-HAACK BODY, FIXED VOLUME

Consider, next, the more difficult problem

(v) Given a wing and Sears-Haack body of length $2l_0$ (long enough to contain the apexes of the fore and after Mach cones enclosing the wing), what modification of this fuselage within the length $l_1'+l_1$ (and within that length only, see fig. 7) minimizes the total wave drag for a given total volume?

In order to answer this question, it is necessary to consider separately two cases; namely, the one in which $l_1'\geq L_0'$ and $l_1\geq L_0$ (i.e., the portion of the body free for variation contains the apexes of the wing's Mach cone envelope, as shown in fig. 7) and the other in which the preceding conditions are not satisfied.

First consider the combination for which $l_1'\geq L_0'$ and $L_1\geq L_0$. The wave drag of such a combination can always be calculated using equation (37) wherein D_{SH} is the wave drag of the basic Sears-Haack body fixed by the stationary nose and tail portions, D_1 is the combined wave drag of the

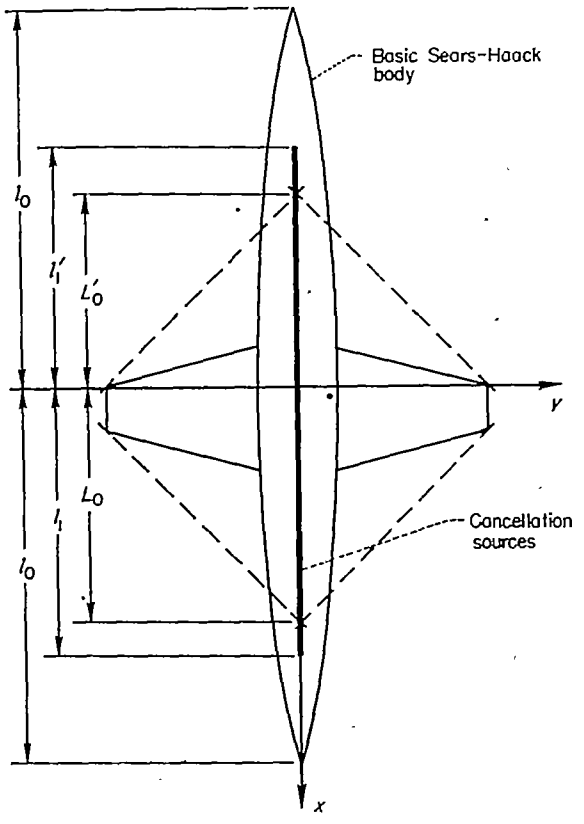

FIGURE 7.—Extent of cancellation sources for wing and Sears-Haack body.

wing and the (as yet unknown) body indentation, and V_1 is the net difference in volume between V_{SH}, the volume of the Sears-Haack body, and the final volume of the complete configuration. Since the basic Sears-Haack body is fixed and the total volume is given, the entire term $D_{SH}[1+(2V_1/V_{SH})]$ is fixed and the solution to the problem is obviously that for which the wing equivalent sources and the source simulating the body indentation combine to form a Sears-Haack distribution in the interval $-l_1' \leq x \leq l_1$.

Using equations (2) and (3) to relate the wing and body source variations to their respective areas, we find the fuselage cross-sectional area can be written for $-l_0 \leq x \leq -l_1'$

$$S_f(x)=\frac{8V_{SH}}{3\pi l_0^4}(l_0^2-x^2)^{3/2} \tag{41a}$$

for $-l_1' \leq x \leq l_1$

$$S_f(x)=\frac{8V_{SH}}{3\pi l_0^4}(l_0^2-x^2)^{3/2}-\frac{1}{2\pi}\int_0^{2\pi} S_w(x,\theta)d\theta+\frac{128V_1}{3\pi(l_1+l_1')^4}[(l_1'+x)(l_1-x)]^{3/2} \tag{41b}$$

and for $l_1 \leq x \leq l_0$

$$S_f(x)=\frac{8V_{SH}}{3\pi l_0^4}(l_0^2-x^2)^{3/2} \tag{41c}$$

The total wave drag of the wing and the fuselage, as given by equations (41) is then

$$\frac{D}{q}=\frac{8V_{SH}^2}{\pi l_0^4}\left(1+\frac{2V_1}{V_{SH}}\right)+\frac{128V_1^2}{\pi(l_1+l_1')^4}+\frac{D_\epsilon}{q} \tag{42}$$

where D_ϵ is defined by equations (5), (6), and (7).

Since, as we have been assuming, βA is small, D_ϵ is negligible, and a comparison between equations (37) and (42) shows that the drag of the combination formed by mounting two wing panels on a Sears-Haack body can be reduced without a change in the total volume and with a modification limited to the interval $-l_1'<x<l_1$ by the difference between the drag of the two panels flying alone and the drag of a Sears-Haack body having a length equal to $l_1'+l_1$, and a volume equal to the volume of the two panels. So long as the points $x=-l_1'$ and $x=l_1$ do not lie off the basic body, and so long as the required indentation can be accommodated, this result is independent of the wing's fore-and-aft position.

If the body modification is limited so that either $l_1'<L_0'$ or $l_1<L_0$ or both, the above results do not apply, since, in such cases, the second body—in the sense defined above—cannot be varied for x between $-l_1'$ and $-L_0'$ or L_0 and l_1 or both, and its drag cannot, therefore, be reduced to that of an equivalent Sears-Haack body. The best modification in this case can be calculated from the results presented in the material immediately following.

LIMITED INDENTATION ON ARBITRARY BODY-FIXED VOLUME

Consider the question

(vi) Given a wing, a body length, and the area distribution of the fore-and-aft portions of a body, what is the variation of area along the intermediate portion of the body which yields a minimum wave drag for a fixed total volume?

Again, as in equation (17), let $\sigma(x)$ represent the sum of the

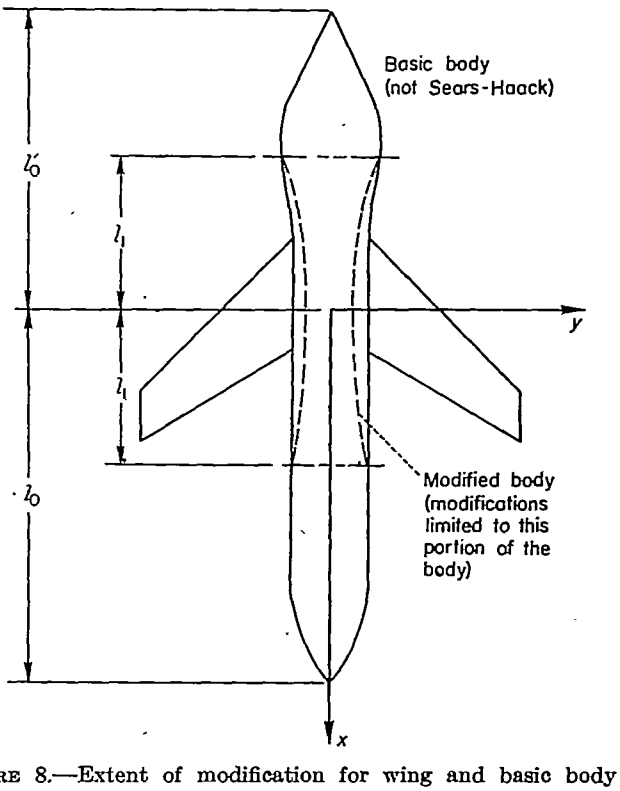

FIGURE 8.—Extent of modification for wing and basic body (not Sears-Haack).

sources representing the basic body and the wing equivalent source distribution,

$$\sigma(x)=S_f(x)+\frac{1}{2\pi}\int_0^{2\pi} S_w(x,\theta)d\theta \tag{43}$$

It is now convenient, however, to let $\sigma(x)$ be a fixed function in the entire interval $-l_0'\leq x\leq l_0$, see figure 8, and let the body modifications, which are to be optimized in the interval $-l_1<x<l_1$ be represented by $\Delta S_f(x)$ which has the end conditions

$$\left.\begin{aligned}\Delta S_f'(-l_1)=\Delta S_f'(l_1)=0\\ \Delta S_f(-l_1)=\Delta S_f(l_1)=0\end{aligned}\right\} \tag{44}$$

The change in volume caused by the body modification, ΔV, is given by

$$\Delta V=-\int_{-l_1}^{l_1} x\Delta S_f'(x)\,dx \tag{45}$$

The usual variational procedure leads directly to the integral equation

$$\int_{-l_1}^{l_1}\frac{\Delta S_f''(x_2)dx_2}{x_1-x_2}=-\int_{-l_0'}^{l_0}\frac{\sigma''(x_2)dx_2}{x_1-x_2}+\lambda_0+\lambda_1x_1;\ -l_1<x_1<l_1 \tag{46}$$

where λ_0 and λ_1 are fixed by the conditions given in equations (44) and (45). Equation (46) is similar in form to equation (13) and its inversion can be obtained by use of methods similar to those for inverting the latter equation. Thus, the solution to equation (46) becomes for $-l_1\leq x\leq l_1$

$$\Delta S_f'(x)=-\sigma'(x)+\frac{\sqrt{l_1^2-x^2}}{\pi}\left\{\int_{-l_0'}^{-l_1}\frac{-\sigma'(x_1)dx_1}{(x_1-x)\sqrt{x_1^2-l_1^2}}+\right.$$
$$\left.\int_{l_1}^{l_0}\frac{\sigma'(x_1)dx_1}{(x_1-x)\sqrt{x_1^2-l_1^2}}+\frac{4x}{l_1^4}[2I_2-l_1^2I_0-2(V+\Delta V)]+\frac{2I_1}{l_1^2}\right\} \tag{47}$$

where

$$I_n=\int_{-l_0'}^{l_1}\frac{x_1^n\sigma'(x_1)dx_1}{\sqrt{x_1^2-l_1^2}}-\int_{l_1}^{l_0}\frac{x_1^n\sigma'(x_1)dx_1}{\sqrt{x_1^2-l_1^2}} \tag{48}$$

and V is the total volume of the wing and unmodified fuselage, that is

$$V=-\int_{-l_0'}^{-l_0} x\sigma'(x)dx \tag{49}$$

Equation (47) integrates to give

$$\Delta S_f(x)=-\sigma(x)+\frac{1}{\pi l_1^2}(I_1x+l_1^2I_0)\sqrt{l_1^2-x^2}-$$
$$\frac{4}{3\pi l_1^4}[2I_2-l_1^2I_0-2(V+\Delta V)](l_1^2-x^2)^{3/2}+H(x) \tag{50}$$

where

$$H(x)=\frac{1}{\pi}\int_{-l_0'}^{-l_1}\sigma'(x_1)\left[\tan^{-1}\frac{x_1x-l_1^2}{\sqrt{(l_1^2-x^2)(x_1^2-l_1^2)}}+\frac{\pi}{2}\right]dx_1-$$
$$\frac{1}{\pi}\int_{l_1}^{l_0}\sigma'(x_1)\left[\tan^{-1}\frac{x_1x-l_1^2}{\sqrt{(l_1^2-x^2)(x_1^2-l_1^2)}}+\frac{\pi}{2}\right]dx_1 \tag{51}$$

If D_σ is the drag of the original wing-body combination and $D_{\Delta S}$ is the drag of a body of revolution having the same normal area distribution as the modification, then

$$\frac{D}{q}=\frac{D_\sigma}{q}-\frac{D_{\Delta S}}{q}+\frac{8\Delta V}{\pi l_1^4}[2(V+\Delta V)+l_1^2I_0-2I_2] \tag{52a}$$

On the other hand D_{re} can be written

$$\frac{D_{re}}{q}=\frac{D^*}{q}+\frac{1}{\pi l_1^2}\left\{\frac{2}{l_1^2}[2I_2-l_1^2I_0-2(V+\Delta V)]^2+I_1^2\right\} \tag{52b}$$

where if

$$G(x_1,x_2)=\frac{1}{x_1-x_2}\sqrt{\frac{x_2^2-l_1^2}{x_1^2-l_1^2}} \tag{53}$$

D^*/q can be expressed as

$$\frac{D^*}{q}=\frac{1}{2\pi}\left[\int_{-l_0'}^{-l_1}dx_1\int_{-l_0'}^{-l_1}dx_2\sigma'(x_1)\sigma''(x_2)G(x_1,x_2)-\right.$$
$$2\int_{-l_0'}^{-l_1}dx_1\int_{l_1}^{l_0}dx_2\sigma'(x_1)\sigma''(x_2)G(x_1,x_2)+$$
$$\left.\int_{l_1}^{l_0}dx_1\int_{l_1}^{l_0}dx_2\sigma'(x_1)\sigma''(x_2)G(x_1,x_2)\right] \tag{54}$$

LIMITED INDENTATION ON ARBITRARY BODY—FIXED DIAMETER

As a final example in this section, consider the questio

(vii) Given a wing, a body length, and the area dis tribution of the fore-and-aft portions of a body, wha is the intermediate variation of fuselage area that ha a given area at some intermediate station $x=d_1$ an yields a minimum wave drag for the combination?

Using the same definition for $\sigma(x)$ as is given in equatio (43), and again designating the area modification as $\Delta S_f(x)$ one can apply the same methods used to develop equation (21) and (46) and write the integral equation for $\Delta S_f(x)$ i the form

$$\int_{-l_1}^{l_1}\frac{\Delta S_f''(x_2)dx_2}{x_1-x_2}=-\int_{-l_0'}^{l_0}\frac{\sigma''(x_2)dx_2}{x_1-x_2}+\begin{cases}\lambda_0, & -l_1<x_1<d_1\\ \lambda_1, & d_1<x_1<l_1\end{cases} \tag{56}$$

where λ_0 and λ_1 are constants whose values depend upon th restraints.

The solution to equation (56) can be written

$$\Delta S_f''(x)=-\sigma''(x)-\frac{1}{\pi\sqrt{l_1^2-x^2}}\left[\int_{-l_0'}^{-l_1}\frac{\sigma''(x_2)}{x-x_2}\sqrt{x_2^2-l_1^2}\,dx_2-\right.$$
$$\left.\int_{l_1}^{l_0}\frac{\sigma''(x_2)}{x-x_2}\sqrt{x_2^2-l_1^2}dx_2-A-Bx\right]-C_1\cosh^{-1}\frac{l_1^2-xd}{l_1|x-d} \tag{57}$$

and the three constants A, B, and C_1 are fixed by the co ditions: (1) continuous slope

$$\int_{-l_1}^{l_1}\Delta S_f''(x)\,dx=0 \tag{58}$$

(2) the body area at $x=l_1$ is unchanged

$$\int_{-l_1}^{l_1}\Delta S_f'(x)\,dx=0 \tag{58}$$

and (3) the body area at d_1 is given

$$\int_{-l_1}^{d_1}\Delta S_f'(x)\,dx=\Delta S_f(d_1) \tag{58}$$

The final solution is

$$\Delta S_f(x)=-\sigma(x)+H(x)-\frac{C_1}{2}(x-d_1)^2\cosh^{-1}\frac{l_1^2-xd_1}{l_1|x-d_1|}+\frac{\sqrt{l_1^2-x^2}}{l_1^2-d_1^2}\left\{\frac{x-d_1}{\pi}(I_0d_1+I_1)+\frac{l_1^2-d_1x}{\sqrt{l_1^2-d_1^2}}\left[\Delta S_f(d_1)+\sigma(d_1)-H(d_1)\right]\right\} \tag{59}$$

where

$$C_1=\frac{2l_1^2}{(l_1^2-d_1^2)^2}\left[\Delta S_f(d_1)+\sigma(d_1)-H(d_1)-\frac{\sqrt{l_1^2-d_1^2}}{\pi l_1^2}(I_1d_1+I_0l_1^2)\right] \tag{60}$$

and I_n and $H(x)$ are defined in equations (48) and (51), respectively.

The drag can be expressed either as

$$\frac{D}{q}=\frac{D_\sigma}{q}-\frac{D_{\Delta S}}{q}+\pi C_1\Delta S_f(d_1) \tag{61a}$$

where D_σ is again the drag of the original unmodified combination and $D_{\Delta S}$ is the drag of the modification alone, or as

$$\frac{D_{re}}{q}=\frac{D^*}{q}+\frac{B^2(l_1^2-d_1^2)}{4\pi}+\frac{1}{4\pi}\left(Bd_1-C_1\pi\sqrt{l_1^2-d_1^2}\right)^2 \tag{61b}$$

where D^* and C_1 are defined by equations (54) and (60), respectively, and B is given by

$$B=\frac{1}{l_1^2}\left(\pi d_1C_1\sqrt{l_1^2-d_1^2}-2I_1\right) \tag{62}$$

AMES AERONAUTICAL LABORATORY
NATIONAL ADVISORY COMMITTEE FOR AERONAUTICS
MOFFETT FIELD, CALIF., *Aug. 4, 1955*

REFERENCES

1. Jones, Robert T.: Theory of Wing-Body Drag at Supersonic Speeds. NACA Rep. 1284, 1956.
2. Baldwin, Barrett S. Jr., and Dickey, Robert R.: Application of Wing-Body Theory to Drag Reduction at Low Supersonic Speeds. NACA RM A54J19, 1955.
3. Nielsen, Jack N.: General Theory of Wave-Drag Reduction for Combinations Employing Quasi-Cylindrical Bodies With an Application to Swept Wing and Body Combinations. NACA TN 3722, 1956.
4. Lomax, Harvard, and Heaslet, Max. A.: A Special Method for Finding Body Distortions That Reduce the Wave Drag of Wing and Body Combinations at Supersonic Speeds. NACA Rep. 1282, 1956.
5. Lomax, Harvard: The Wave Drag of Arbitrary Configurations in Linearized Flow as Determined by Areas and Forces in Oblique Planes. NACA RM A55A18, 1955.
6. Ward, G. N.: Supersonic Flow Past Slender Pointed Bodies. Quart. Jour. Mech. and Appl. Math., vol. II, pt. 1, 1949, pp. 75–97.
7. Hayes, Wallace D.: Linearized Supersonic Flow. Rep. AL-222, North American Aviation, Inc., Los Angeles, Calif., June 18, 1947.
8. Lomax, Harvard, Heaslet, Max. A., and Fuller, Franklyn B.: Integrals and Integral Equations in Linearized Wing Theory. NACA Rep. 1054, 1951.
9. Adams, Mac C.: Determination of Shapes of Boattail Bodies of Revolution for Minimum Wave Drag. NACA TN 2550, 1951.
10. Eminton, E.: On the Minimisation and Numerical Evaluation of Wave Drag. R. A. E. Rep. Aero. 2564, (British) Nov. 1955.
11. Eminton, E., and Lord, W. T.: Note on the Numerical Evaluation of the Wave Drag of Smooth Slender Bodies Using Optimum Area Distributions for Minimum Wave Drag. Jour. Roy. Aero. Soc., vol. 60, no. 541, Jan. 1956, pp. 61–63.