REPORT 1314

SUMMARY OF SCALE-MODEL THRUST-REVERSER INVESTIGATION [1]

By John H. Povolny, Fred W. Steffen, and Jack G. McArdle

SUMMARY

An investigation was undertaken to determine the characteristics of several basic types of thrust reverser. Models of three types, target, tailpipe cascade, and ring cascade, were tested with unheated air. The effects of design variables on reverse-thrust performance, reversed-flow boundaries, and thrust-modulation characteristics were determined.

Values of reverse-thrust ratio as high as 84 percent could be obtained if the gas were turned far enough and permitted to attach to the external fairing. Without reversed-flow attachment and with controlled reversed-flow patterns, all three types of reverser gave reverse-thrust ratios over 40 percent. The ring type with a 7° external fairing gave 41 percent, the target type with a 7° fairing gave 49 percent, and the tailpipe-cascade type with a 0° fairing gave 73 percent. All three types had satisfactory thrust-modulation characteristics and were capable of producing desired reversed-flow patterns. It was, thus, concluded that the selection of a reverser type may be based primarily on installation considerations rather than on performance characteristics.

INTRODUCTION

With the landing speeds of jet aircraft ever increasing, the required landing distances are becoming prohibitively long. Landing speeds are high for two reasons: first, aerodynamic reasons such as high wing loadings and low maximum-lift coefficients, and second, the necessity for making the final approach at a relatively high engine speed in preparation for a possible wave-off.

The effectiveness of reducing the landing run by the application of several braking methods has been computed, and the results are compared in figure 1. The methods consist of the use of wheel brakes alone, wheel brakes plus a drag parachute, and wheel brakes plus 40- and 80-percent thrust reversal. These methods were assumed to be effective at the instant of touchdown, and no braking or thrust spoilage was applied until that time. Thus, figure 1 shows that thrust reversal plus wheel brakes is superior to the other two methods as an after-touchdown braking device, even if only 40-percent reversal is attained.

Thrust reversers and drag parachutes can also effectively reduce the landing roll by reducing the approach speed. The thrust reverser has the advantage of providing the required reduced or reverse thrust (at rated engine conditions) with the assurance that full forward thrust can be regained rapidly if the need arises. A drag parachute can be used to reduce final approach speed by increasing drag, but it must be cut loose in case of a wave-off and will not be available for the next attempted landing.

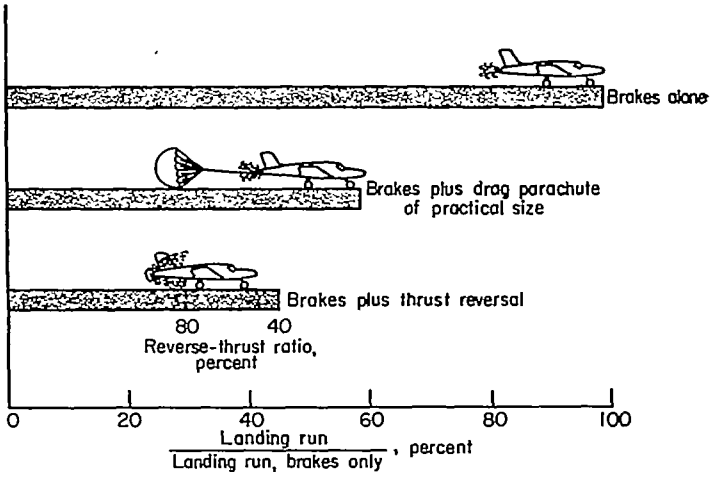

Figure 1.—Landing runs required when applying braking devices after touchdown.

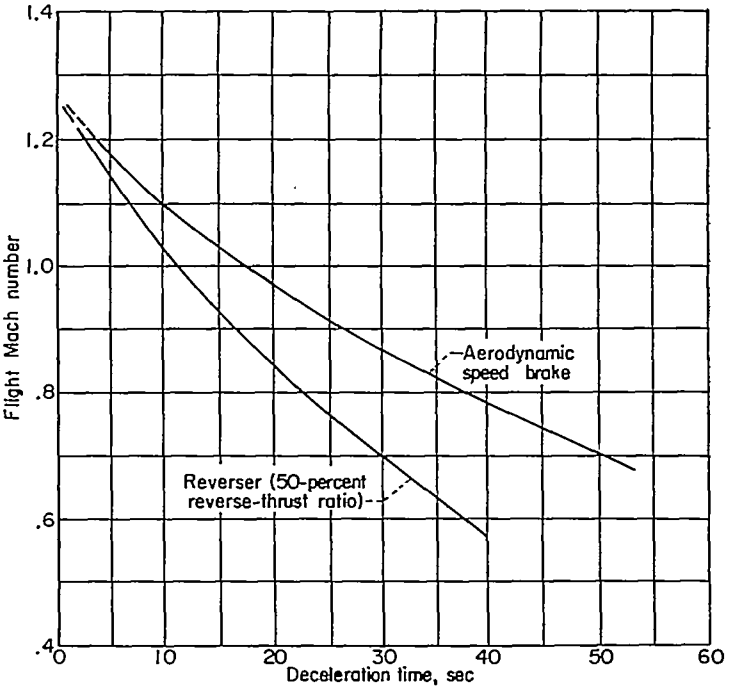

Figure 2.—Comparison of aerodynamic speed brake with thrust reverser used as speed brake. Airplane weight, 20,000 pounds; altitude, 25,000 feet.

In addition to reducing the landing roll on dry runways, the thrust reverser has other functions. For example, it

[1] Supersedes NACA TN 3664, "Summary of Scale-Model Thrust-Reverser Investigation," by John H. Povolny, Fred W. Steffen, and Jack G. McArdle, 1956.

would be far superior to wheel brakes on wet or icy runways. Also, it is conceivable that a thrust reverser can be used as a speed brake. With a reverser used in this manner, the aerodynamic speed brakes could be removed from the airplane to compensate for the weight of the reverser. The effectiveness of a thrust reverser as a speed brake has also been computed and for the case considered is (fig. 2) superior to an aerodynamic speed brake.

Because thrust reversal is a desirable or necessary feature of high-speed or all-weather jet aircraft, a research program on thrust reversal was inaugurated at the NACA Lewis laboratory. (Some preliminary investigations that have been made in this field are reported in ref. 1.) It was the purpose of the NACA program to isolate the more promising types, investigate their potentialities, and obtain their performance, rather than to design a reverser for a specific application. The detailed results of this investigation are reported in references 2 to 5. All this work was done on a small-scale, unheated-air-duct setup equipped with a 4-inch-diameter exhaust nozzle, except some runs which were made on a full-scale installation for comparative purposes.

This report reviews the types of thrust reverser investigated, summarizes their important performance characteristics, and presents proposed operational methods. Three types of reverser were investigated, target, tailpipe cascade, and ring cascade. The effects of design variables on reverse-thrust performance, reversed-flow fields, and thrust-modulation characteristics were determined for each type.

APPARATUS

Except where specifically noted in the text, all the data presented were obtained from thrust-reverser models operated with unheated air and with no external flow. The apparatus used to measure model thrust in both positive and negative directions is shown in figure 3. The air-supply duct was connected to the laboratory air system by flexible bellows and pivoted on a steel frame so that axial forces along the pipe, both forward and reverse, could be freely transmitted to and read from a balanced-pressure-diaphragm, null-type, thrust-measuring cell. A blast deflector attached to the floor of the test cell was placed around the model external fairing to prevent the reversed flow from impinging on the air-supply-duct flanges.

Airflow through the system was measured by means of a standard ASME sharp-edged orifice. Nozzle-inlet total and ambient pressures were measured to determine the nozzle pressure ratio. Wall static-pressure taps and total- and static-pressure rakes were located along the external fairing during some of the runs in order to determine reversed-flow characteristics. A tufted plate was also installed between the nozzle and the target reversers during some runs to determine the reversed-flow turning angle.

PROCEDURE

Forward and reverse jet thrusts were obtained over a range of exhaust-nozzle total- to ambient-pressure ratios from 1.4 to 3.0. The ratio of the reversed jet thrust per pound of airflow of a given configuration at a given pressure

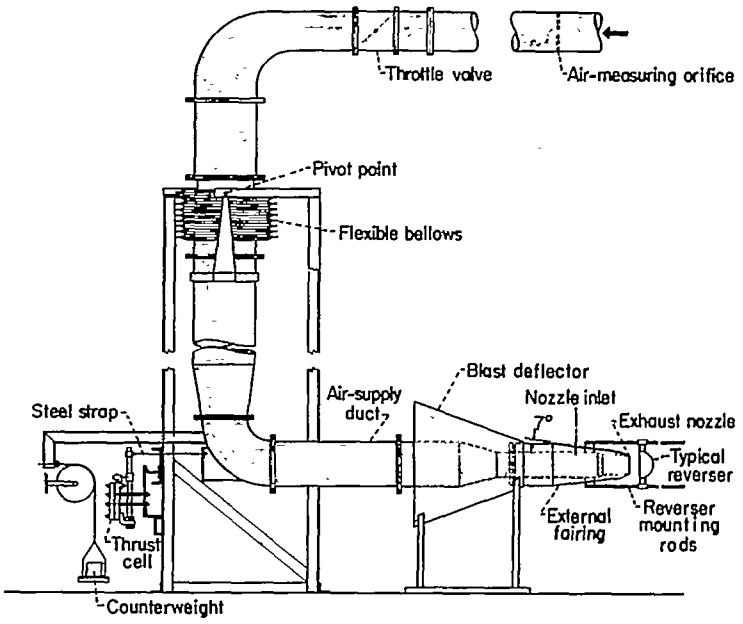

FIGURE 3.—Schematic diagram of setup for thrust-reversal investigation.

ratio to the forward jet thrust per pound of airflow of the nozzle alone at the same pressure ratio was thus obtained and defined as the reverse-thrust ratio. Jet thrust and airflow were corrected for small changes in inlet pressure and temperature.

Pressure ratio was found to have a relatively minor effect on reverse-thrust ratio over the range covered. Because the trends at a pressure ratio of 2.0 are typical of the trends at other pressure ratios, data are generally shown only at that pressure ratio. The pressure ratio was regulated by variation of the inlet pressure.

The Reynolds number of the model tests was in the range of values applicable to full-scale installations. The performance of a full-scale hemispherical reverser attached to a pod-mounted turbojet engine was also determined for comparison with the model tests. The correlation between the model and the full-scale data is shown in figure 4. At a nozzle pressure ratio of 1.4 there is a difference between the two sets of data of about 8 percentage points, whereas at a nozzle pressure ratio of 1.8 this difference decreased to about 4 percentage points. Inasmuch as most engines will operate at a nozzle pressure ratio of at least 2.0, this difference is not considered significant. The discrepancy is probably due to leakage through the joints of the full-scale hemisphere rather than to any aerodynamic or scale effect.

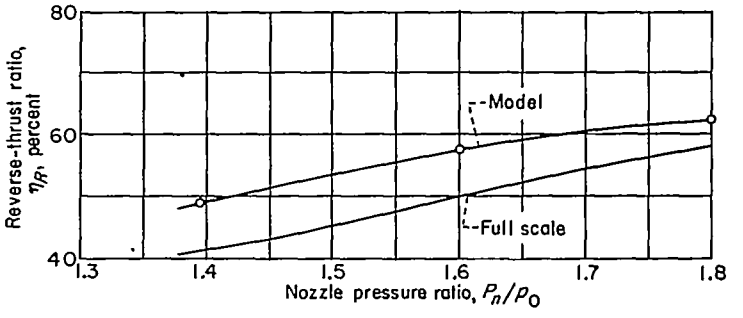

FIGURE 4.—Comparison of quarter-scale unheated-air model with full-scale performance of hemispherical thrust reverser.

RESULTS AND DISCUSSION

All the reverser types investigated were selected on the basis of their potential ability to fulfill several practical requirements. The first of these is that the reverser be "fail-safe." This term is usually considered to mean that in the event of a reverser-actuating-mechanism failure the reverser will return to a forward-thrust position from gas forces alone. Secondly, the reverser should have no effect on engine performance in order that the full thrust of the engine will be available for reversing. Thirdly, the retracted reverser should have low internal drag and suitable external shape. Lastly, the reverser should produce a minimum of 40-percent reverse thrust. It is felt that 40-percent reversal will be sufficient to stop future jet aircraft within the confines of existing airports.

Generally, three basic types of thrust reverser were investigated, target, tailpipe cascade, and ring cascade. These three types provide a selection of reversers that can be located at various positions on the airplane and on airplanes equipped with afterburning or nonafterburning engines. Performance, the effects of design variables on performance, reversed-flow fields, and thrust-modulation characteristics are discussed for each type.

TARGET-TYPE THRUST REVERSERS

Target-type thrust reversers are so designated because the jet is turned by a target positioned behind the exhaust nozzle. Two general configurations of target-type reverser, the hemisphere and the half cylinder, are illustrated in figure 5. The hemisphere can be designed similar to a clamshell nozzle so that the gas forces acting on the reverser segments are very nearly balanced during actuation. This results in low actuation forces. The cylindrical or circular-arc reverser was expected to have desirable jet directional qualities with respect to avoiding control surfaces because of the longer flow path of the gases along the length of the cylinder.

Effect of spacing ratio.—There is a range of spacing ratios (distance between nozzle and target divided by nozzle diameter) for which the reverse-thrust ratio of target-type reversers will generally remain about constant or increase slightly as spacing ratio is reduced. This trend is shown in the basic data plots of reference 2. However, a spacing ratio will eventually be reached at which the mass flow through the exhaust nozzle will be reduced and, in the case of a turbojet-engine installation, the turbine temperature will be increased. It is possible that the spacing ratio can be decreased further without encountering turbine overtemperature if the engine exhaust nozzle is opened. The reverse-thrust ratios obtained with the nozzle so opened and the nozzle-opening ratios required are plotted against spacing ratio in figure 6 for various-sized hemispheres. A curve showing the minimum spacing ratio for fixed-nozzle operation with the various-sized hemispheres is also included.

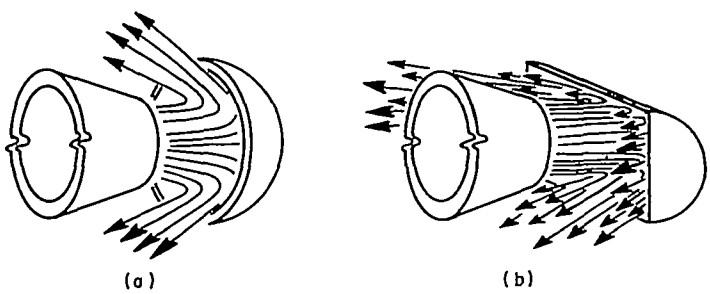

(a) Hemisphere.
(b) Half cylinder (axis normal to jet).
FIGURE 5.—Target-type thrust-reverser configuration.

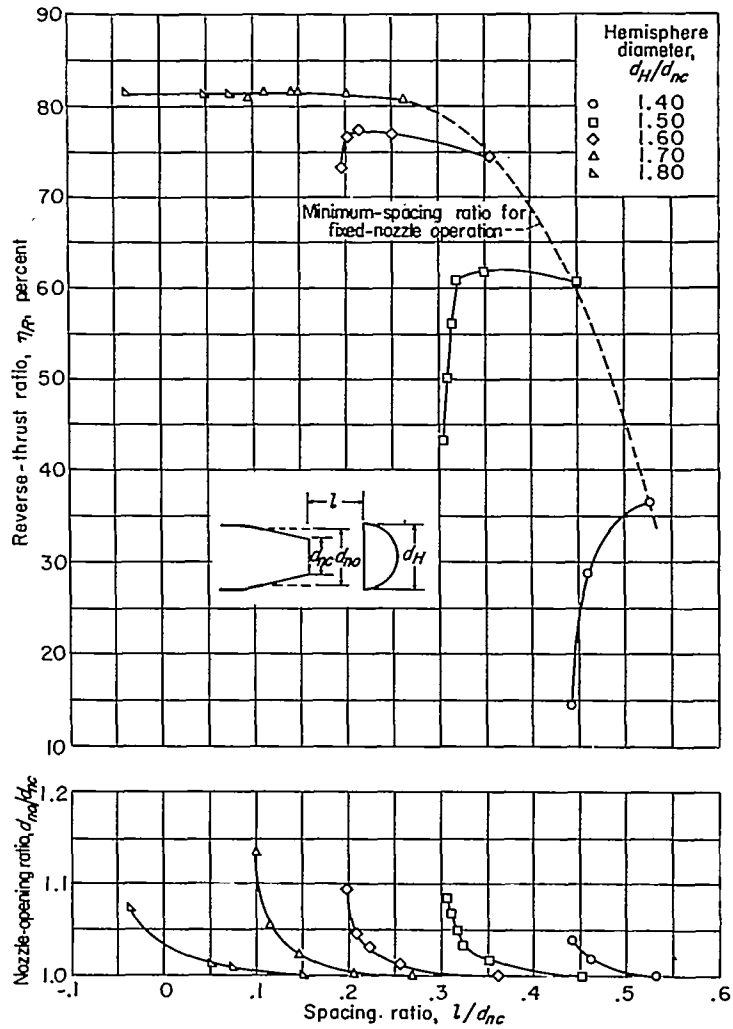

FIGURE 6.—Reverse-thrust ratios obtained with hemispherical target-type thrust reversers at various spacing ratios and the nozzle openings and spacings required to maintain constant turbine temperature. Nozzle pressure ratio, 2.0.

The gains in reverse-thrust ratio that result from closer spacing ratio than can be used with a fixed-area nozzle are small (a maximum of 3 percentage points) and are probably insufficient to justify the installation of a variable-area nozzle for this purpose.

The minimum spacing for a target-type reverser is a function of the cross-sectional or frontal area of the target. The minimum spacing ratios allowing fixed-nozzle operation range from about 0.15 for the largest hemisphere investigated (diam. ratio, 1.8) to about 0.53 for the 1.4-diameter-ratio model. This relation is further illustrated for several hemispherical and cylindrical targets in figure 7, where the minimum spacing ratio is plotted against the frontal-area ratio. The data for the cylinder with a length-to-width ratio of 1.0 and a lip angle of 180° fall on the same (lower)

curve as those for the hemisphere. Modifications to the cylinder resulting in departures from these values of length-to-width ratio and lip angle result in increases in the minimum spacing ratio. This is illustrated by the data for a cylinder with a length-to-width ratio of 2.4 and lip angles of 180° and 146°.

Effect of reverser size.—The effect of the size of the target-type reversers on performance is illustrated in figure 8, which shows reverse-thrust ratio plotted against the frontal-area ratio of the reverser. Data are presented for half cylinders of length-to-width ratios ranging from about 1.0 to 2.5 and also for the hemisphere. These data were all obtained at the minimum spacing ratio required for unrestricted nozzle flow. The length-to-width ratio of the cylinder has only a small effect on performance, and the effect of frontal area ratio is about the same for both the hemisphere and cylinder. Reduction in size or cross-frontal area has only a small effect on reverse-thrust ratio until a value equal to about 2½ times the nozzle area is reached.

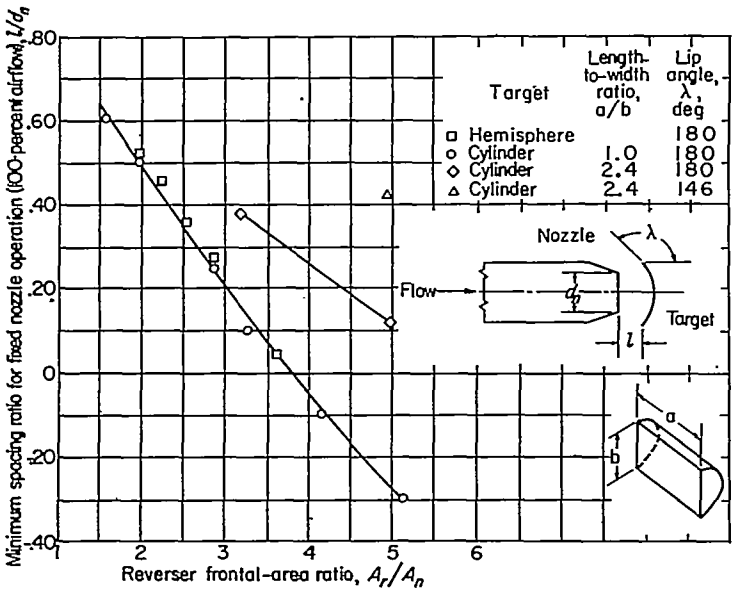

FIGURE 7.—Spacing requirements for target-type thrust reversers. Nozzle pressure ratio, 2.0.

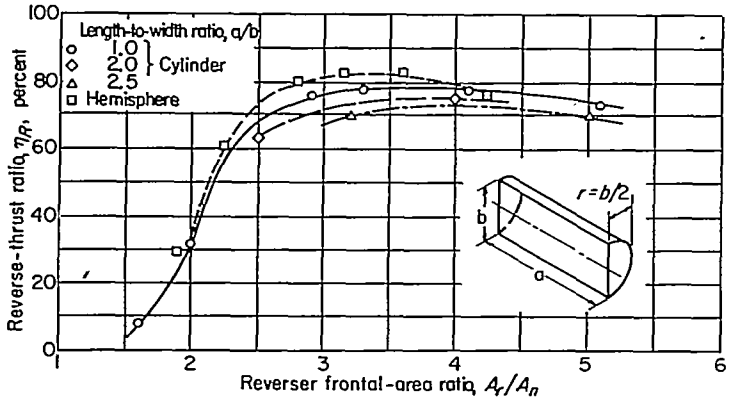

FIGURE 8.—Effect of frontal area on the performance of target-type thrust reverser. Nozzle pressure ratio, 2.0.

Below this value, the fall-off in reversal is quite rapid. At frontal-area ratios between 3 and 4, reverse-thrust ratios as high as 84 percent were obtained.

Effect of shape simplification.—Attempts were made to simplify the shapes of the target-type reversers and thereby reduce the installation and actuating problems. Typical of these was a reduction in the depth of the reverser (by blanking off the rear of the reverser) and the depth of the end plates. The results obtained are illustrated in figure 9, which presents reverse-thrust ratio against reverser depth and end-plate depth for the cylindrical reverser. Depth is presented in terms of percentage of cylinder radius. The data indicate that the depth of either the reverser or end plate could be reduced to 50 percent of full depth without a severe loss in reverse-thrust ratio. Forty-percent reversal was still obtainable with a reverser depth of 14 percent or an end-plate depth of 10 percent. Similar modifications were made to the depth of the hemisphere, and similar results, as shown in figure 10, were obtained.

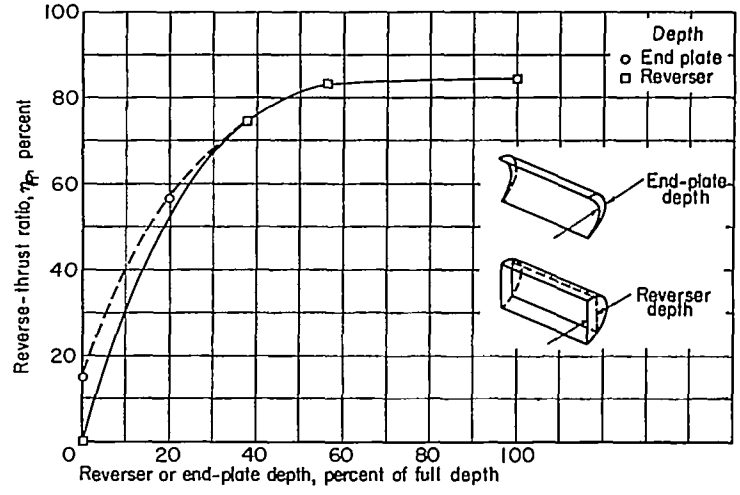

FIGURE 9.—Effect of reverser and end-plate depths on performance of cylindrical thrust reversers. Nozzle pressure ratio, 2.0; reverser frontal-area ratio, 3.17; length-to-width ratio, 1.6; and lip angle, 180°.

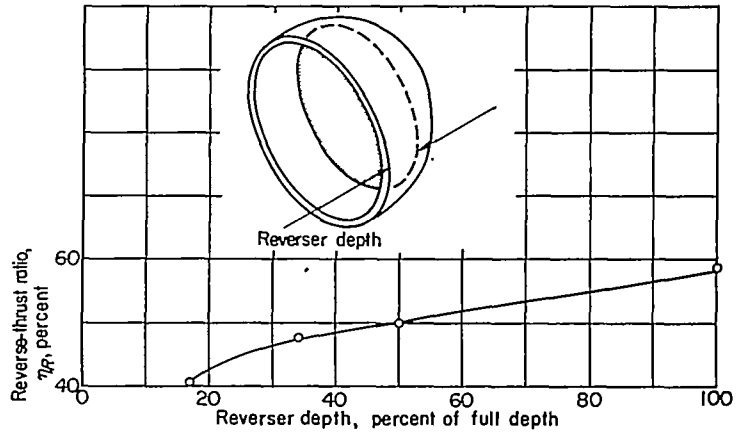

FIGURE 10.—Effect of reverser depth on performance of hemispherical thrust reverser. Nozzle pressure ratio, 2.0; reverser frontal-area ratio, 2.25; and lip angle, 180°.

The variations in reverse-thrust ratio resulting from changes in target lip or end-plate angle are presented in figure 11. Data obtained on both a cylindrical and hemispherical reverser are included as well as the theoretical cosine curve. The lip angle of the cylinder and hemisphere and the end-plate angle of the cylinder are defined by the sketches on the figure. The effects of changing either lip angle or end-plate angle on the performance of the cylinder are about the same, but the slope of the curve defined by these data is less than that for the hemisphere or the theoretical curve. The reason for this is that only part of the gas was affected when one of the cylinder angles was varied, whereas all the gas was affected when the hemisphere lip angle was varied. The real significance of figure 11 is that a high lip or end-plate angle is required to achieve a high thrust reversal, which will, in turn, result in a high gas-turning angle. This high turning angle may introduce other problems, such as jet attachment to the fairing or nacelle and possibly reingestion of the hot gases into the engine inlet.

External-flow fields and jet attachment.—Some information on external-flow fields and jet attachment has been obtained on models in quiescent air by means of tuft and rake measurements. Figure 12 shows typical flow patterns for a hemisphere with a relatively high gas-turning angle and high reversal (about 80 percent) and a hemisphere with a low gas-turning angle and low reversal (about 55 percent). The mean angle of flow for the former was about 170° and for the latter about 150°. As illustrated in the figure, the low-angle flow induced secondary flow instead of attaching to the fairing. The high-angle flow, on the other hand, attached itself to the fairing and remained attached for a considerable distance. Whether or not this is undesirable depends on the application, for in many cases of ground-roll reduction the reverser would be used for short periods only.

The flow is discharged from the hemispherical reverser in a continuous circumferential sheet. In many instances this may cause difficulty because of flow impingement on wings or control surfaces. This impingement could possibly be remedied by blocking the undesired flow regions by means of plates or fairings installed at the reverser, but this will probably result in reverse-thrust reduction. One way of avoiding this impingement without loss of reverse thrust is to use an elongated cylindrical target reverser, which discharges the flow in a lobed pattern. The external-flow fields obtained (4 nozzle diam. upstream) with this type of reverser are shown in figure 13; also shown is the effect of length-to-width ratio on these flow fields. For a length-to-width ratio of 1.0 (a square cylindrical target) the flow is discharged in an approximately square pattern, but for values of length-to-width ratio other than 1 the lobed pattern is obtained. A more distinct separation of the flow into lobes is noted for the case of length-to-width ratio greater than 1. In all the cases illustrated the flow was attached to the fairing; this is consistent with the high values of thrust reversal obtained and noted on figure 13.

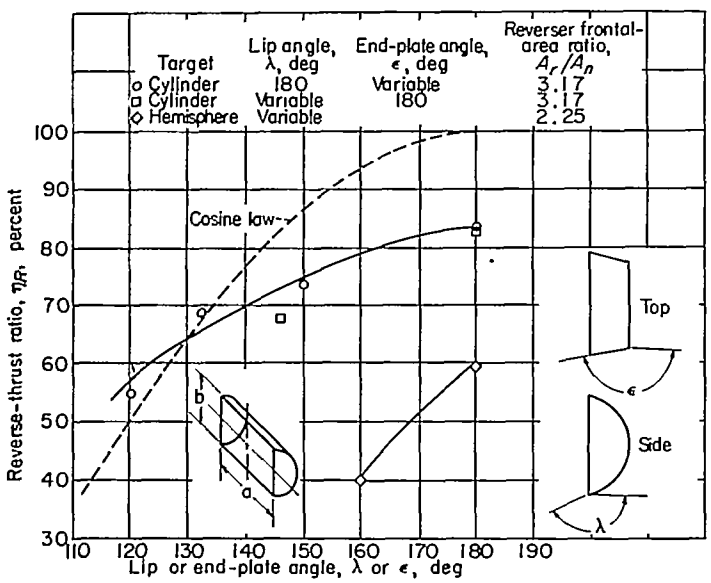

FIGURE 11.—Effect of lip angle or end-plate angle on reverse-thrust ratio of target-type thrust reverser. Nozzle pressure ratio, 2.0; length-to-width ratio of cylindrical reverser, 1.6.

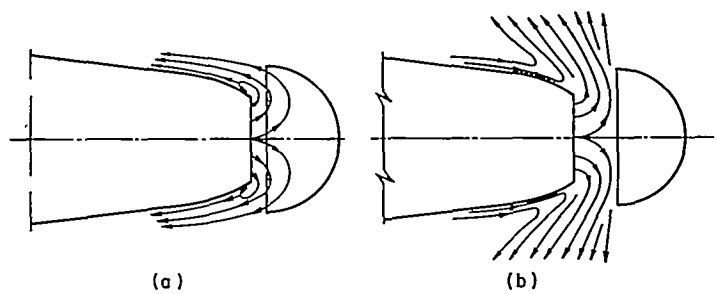

(a) High reverse-thrust ratio (80 percent); high turning angle.
(b) Low reverse-thrust ratio (55 percent); low turning angle.

FIGURE 12.—Relation of flow turning angle and reverse-thrust ratio for hemispherical thrust reverser.

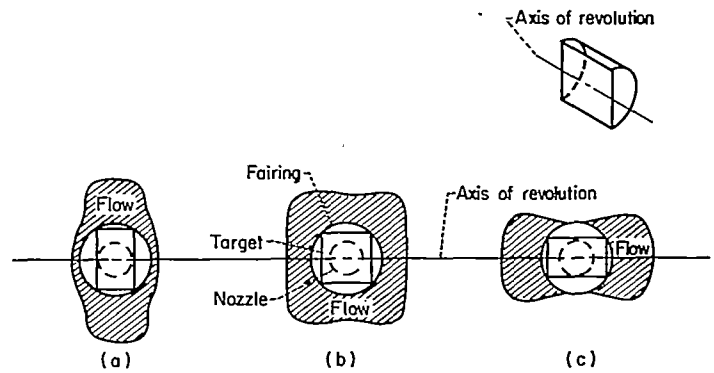

(a) Length-to-width ratio, 0.62; reverse-thrust ratio, 84 percent.
(b) Length-to-width ratio, 1.0; reverse-thrust ratio, 76 percent.
(c) Length-to-width ratio, 1.6; reverse-thrust ratio, 84 percent.

FIGURE 13.—Effect of aspect ratio on reversed-flow boundaries. Nozzle pressure ratio, 2.0; cylindrical thrust reverser with full end plates.

Detachment of the reversed flow from the fairing is possible if the effective gas-turning angle is reduced. Unfortunately, as previously noted, the thrust reversal will also be reduced. An illustration of this situation is presented in figure 14, which shows the variation in reversal and flow patterns obtained with a cylindrical reverser by varying the depth of the end plates. Figure 14(a) shows the attached flow pattern and high reversal (75 percent) obtained with a high gas-turning angle when using full-depth end plates. Figure 14(b) shows the unattached-flow pattern and lower reversal (55 percent) obtained with a reduced gas-turning angle when using end plates with a depth equal to 20 percent of the full depth.

Attempts were made with the target reversers to obtain values of thrust reversal higher than 55 percent without jet attachment to the 7° external fairing used in the previous tests. One of these, which was unsuccessful, consisted in extending the long dimension of the reverser to length-to-width ratios as high as 2½. Another attempt, which permitted an additional 10-percent reversal before encountering jet attachment, consisted in decreasing the angle between the two cylinder halves from 180° to about 120° (fig. 15). As the angle between halves was decreased, a considerable amount of flow escaped through the V-gap at the top and bottom, and it was necessary to install plates to prevent this escape. The installation of the plates, however, caused severe flow instability. Further investigation showed that this instability could be eliminated by installing flow baffles at an angle of 135° at the locations indicated on the figure.

Another angled reverser is shown in figure 16. About 65-percent reversal without attachment was also obtained with this configuration. Flow-instability problems were not encountered, probably because the flow choked at the exit ports in the external fairing.

To recapitulate, if jet attachment must be avoided when using a target reverser with a 7° external fairing, 55-percent thrust reversal can be obtained fairly simply. Higher reversals without attachment are possible, but only at the expense of additional complication.

Effect of hot-gas reingestion.—One of the obvious disadvantages of reversed-flow attachment to the back-end fairing is that it results in overheating of the structure in that region. A more serious aspect, however, would be reingestion of the reversed gases by the engine inlet with consequent overheating of the inlet air. This would not only result in reduced thrust, but could also result in destruction of the engine. Full-scale tests indicated that reingestion can occur when using a high-reversal target device on a nacelle with a high boattail angle while operating under static ground conditions. It was demonstrated that under these conditions increases of 250° F or more in inlet-air temperature are possible. It has also been demonstrated on the full-scale nacelle that the forward velocity of the airplane during ground roll may be sufficient to prevent reingestion. As shown in figure 17, which is a plot of a transient record of engine-inlet temperature against ground speed, an engine-inlet temperature of 200° F was reached only after the airplane had been slowed to 50 miles per hour. It is expected that on a nacelle with a smaller boattail angle this effect would occur at much lower ground-roll speeds, if at all.

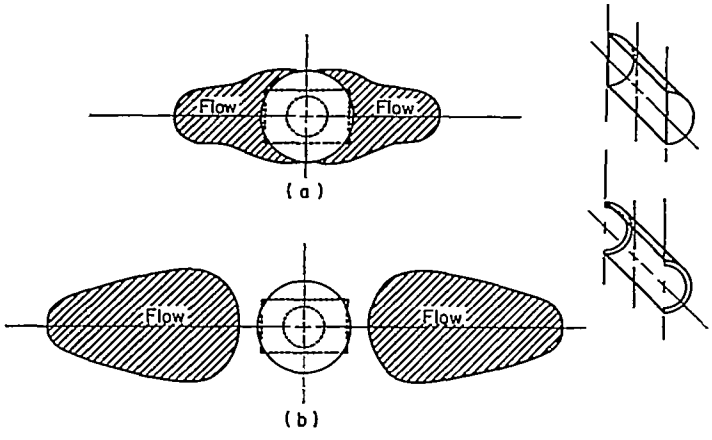

(a) End-plate depth, 100 percent of full depth; reverse-thrust ratio 75 percent.
(b) End-plate depth, 20 percent of full depth; reverse-thrust ratio, 55 percent.

FIGURE 14.—Effect of end-plate depth on reversed-flow boundaries. Nozzle pressure ratio, 2.0; cylindrical thrust reverser.

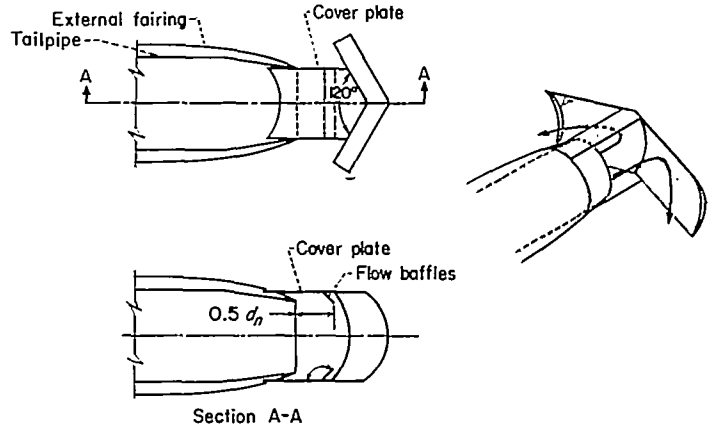

FIGURE 15.—Angled cylindrical thrust reverser with 65-percent reverse-thrust ratio without jet attachment. Flow chokes at nozzle exit.

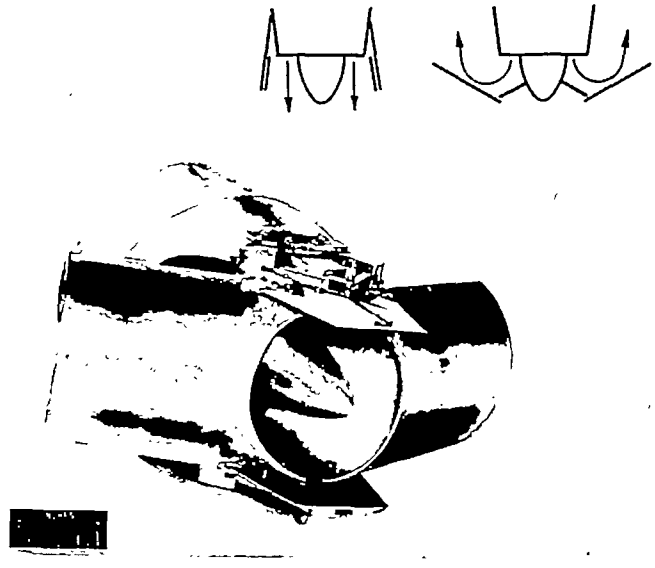

FIGURE 16.—Angled cylindrical reverser. Flow chokes at exit in external fairing.

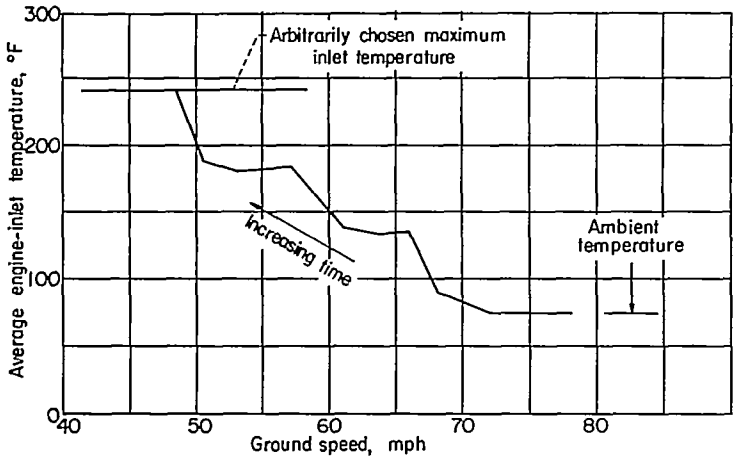

FIGURE 17.—Effect of ground speed on engine-inlet temperature with attached reversed flow.

Thus it has been shown that a target-type reverser can be reduced in size and its shape considerably simplified without reducing the reverse-thrust ratio below 40 percent and without attaching the flow to the external fairing. Shown in figure 18 are two target-type reversers as they might appear when installed on an airplane. Reverser (a) was derived from a hemispherical-type reverser with a depth-reducing plate; whereas, reverser (b) was derived from a cylindrical reverser.

TAILPIPE-CASCADE THRUST REVERSER

The second group of thrust reversers investigated was the tailpipe-cascade type. Figure 19 illustrates a tailpipe-cascade thrust reverser for which scale-model data were obtained. The operation of the tailpipe-cascade reverser requires that the cascade be unblocked and the tailpipe blocked, thus forcing the gas into the cascade.

Typical performance of several of the tailpipe-cascade reversers obtained with the tailpipe completely blocked is illustrated in figure 20. Curves of reverse-thrust ratio against tailpipe pressure ratio are presented for sheet-metal cascades using a "reaction"-type (minimum area at blade exit) blade of 1.65 solidity and an "impulse"-type (minimum

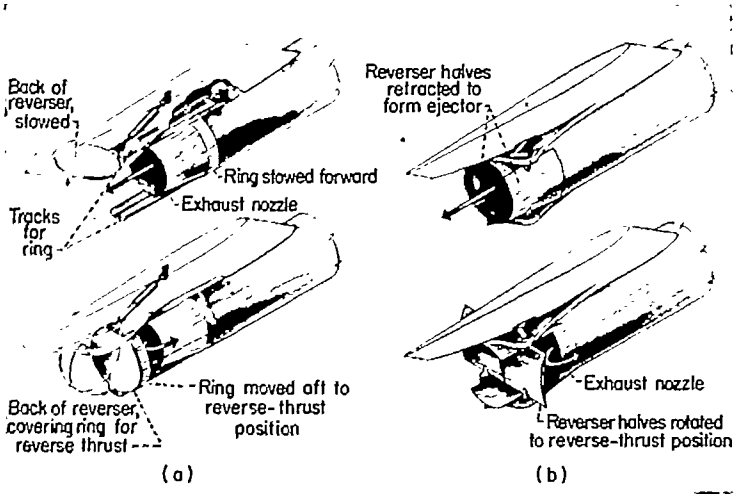

(a) Reverser derived from shallow hemisphere type.
(b) Reverser derived from cylindrical type.

FIGURE 18.—Target-type reversers installed on pod-mounted engine.

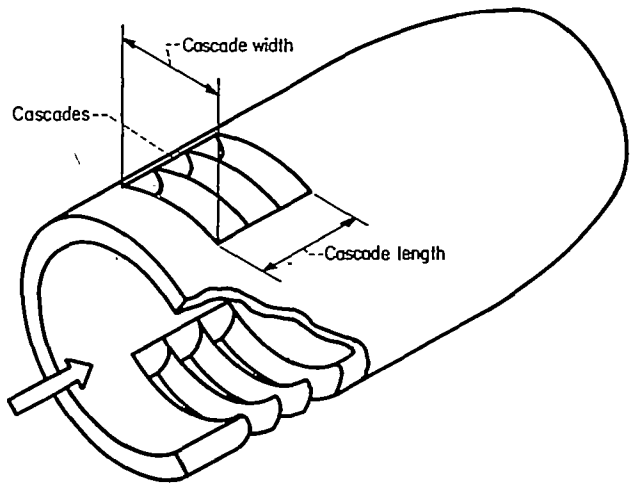

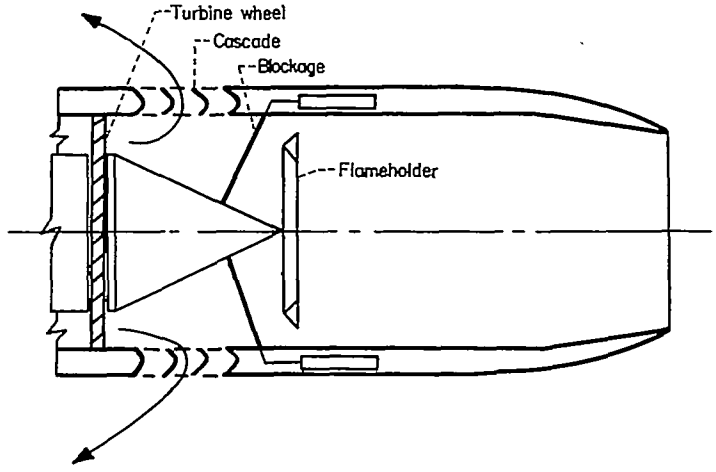

FIGURE 19.—Tailpipe-cascade reverser.

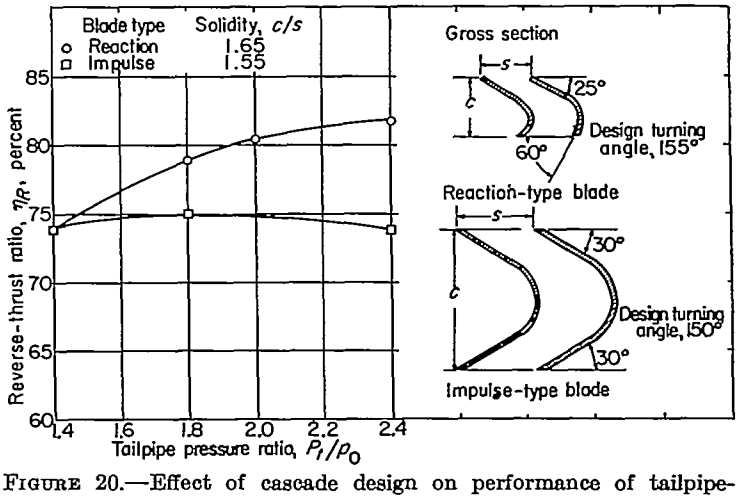

FIGURE 20.—Effect of cascade design on performance of tailpipe-cascade thrust reverser. Tailpipe Mach number, 0.2; tailpipe blockage, 100 percent.

area at blade inlet) blade of 1.5 solidity. Sketches showing cross sections through the blades are also included. The Mach number in the tailpipe just ahead of the cascades was about 0.2 in this case.

The tests with these cascades indicated that high reversal (over 80 percent) and gas-turning angles close to design are obtainable with these simple sheet-metal blades. Modifi-

cation of the blade shape from reaction to impulse type had negligible effect on gas-turning efficiency because the difference between the curves at the higher pressure ratios can be accounted for by the difference in blade exit angle and solidity. Changing the cross section of the blade from that indicated to an airfoil shape with increased thickness likewise had only a small effect on gas-turning efficiency and in no case increased the reversal by more than 5 percent. Relocation of the cascade to a high Mach number region (about 0.50) comparable with that immediately downstream of the turbine resulted in a drop in reversal of up to 5 percentage points. The shape (length-to-width ratio) of the cascade likewise appeared to have negligible effect as long as the cascade was correctly sized to pass the desired gas flow.

Effect of cascade solidity.—The effect of cascade solidity on reverse-thrust ratio is considerable, as shown in figure 21 for two different blade cross sections. Reverse-thrust ratio increases about 10 percentage points as the solidity is increased from 1.11 to 1.55.

For one series of tests the cascades were completely removed, and an external door was used to guide the flow. The results are shown in figure 22. With doors of 0.98 length-diameter ratio set for a 150° turning angle, a reverse-thrust ratio of 55 percent was obtained at a tailpipe pressure ratio of 2.0. This ratio is about 20 percentage points less than that obtained from an impulse cascade reverser with a cascade solidity of 1.55 designed for the same turning angle.

Effect of tailpipe blockage.—The effect of varying the tailpipe blockage on the reverse thrust obtained with a typical cascade reverser is illustrated in figure 23. The cascades were covered as the blockage was decreased so that the effective flow area of the system remained constant. As expected, the reverse thrust decreases as the tailpipe blockage is decreased. A reverse-thrust ratio of 40 percent can be obtained with a blockage of 64 percent. Thus, it is not necessary to block completely the tailpipe to obtain useful values of thrust reversal.

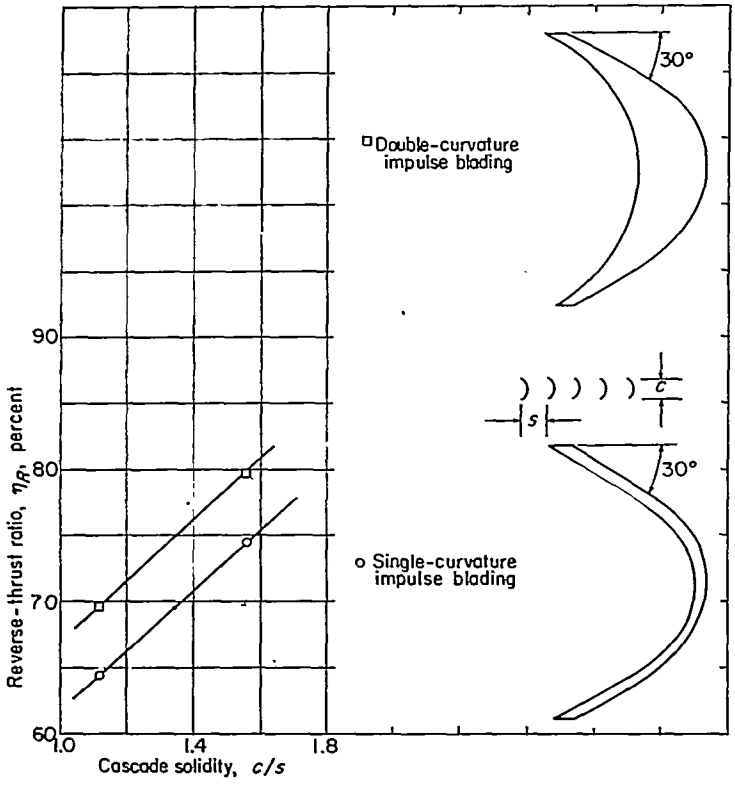

FIGURE 21.—Effect of cascade solidity on performance of tailpipe-cascade thrust reverser. Tailpipe blockage, 100 percent.

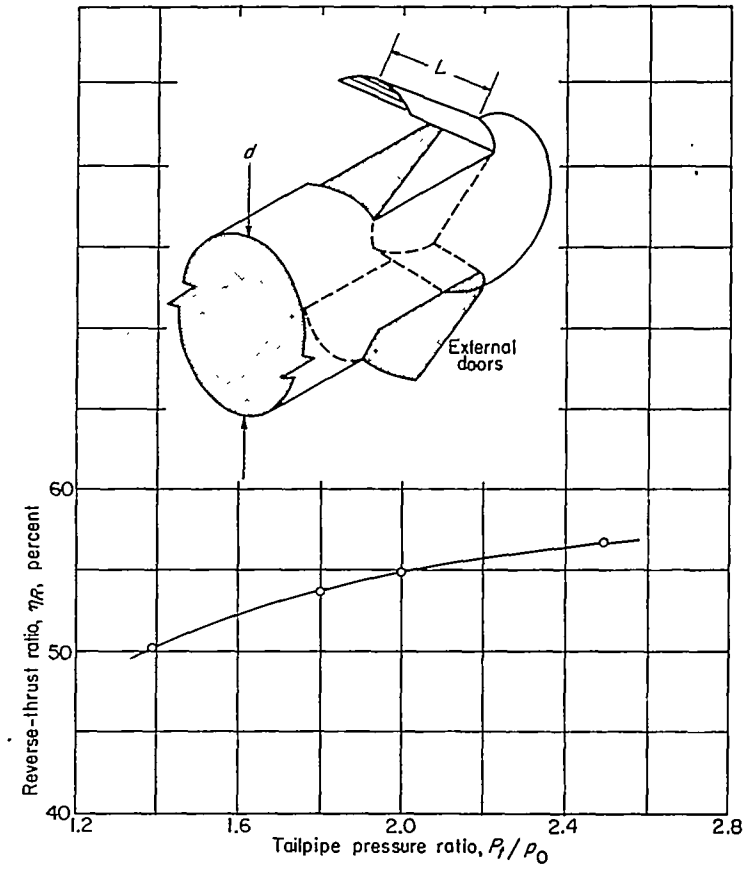

FIGURE 22.—Performance of tailpipe thrust reverser with external guidance doors and no cascade. Blockage, 100 percent; door length-diameter ratio, 0.98; and design turning angle, 150°.

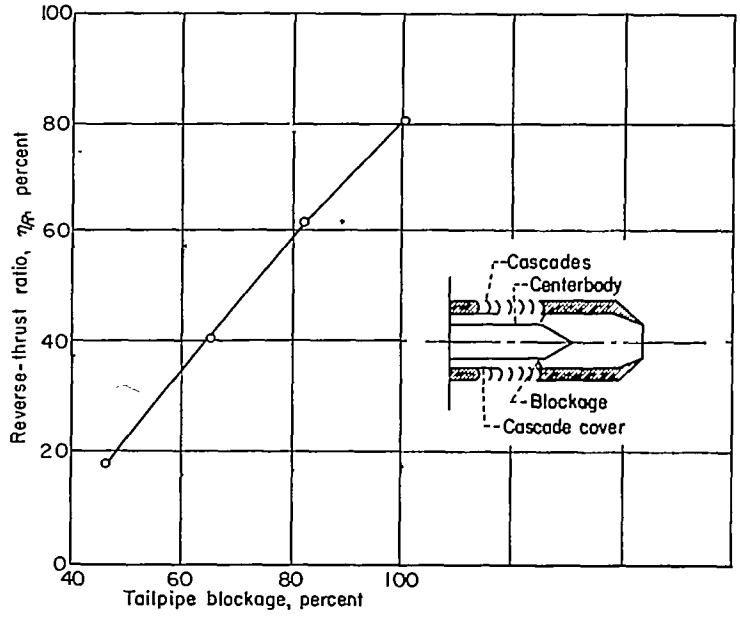

FIGURE 23.—Effect of tailpipe blockage on performance of tailpipe-cascade thrust reverser. Tailpipe pressure ratio, 2.0.

External-flow fields and jet attachment.—As with the target-type reversers, the external-flow fields of the cascade reversers are of considerable interest; and thus, typical external-velocity patterns are presented in figure 24. The profiles at the top of the figure were determined for an impulse-type cascade that produced 73-percent reversal at a pressure ratio of 2.0, and those at the bottom were determined for a reaction-type cascade that produced 81-percent reversal at the same pressure ratio. The essential difference between the two is that, although the design turning angles of the cascades were about the same, the flow from the reaction-type blades was attached to the external fairing, whereas that from the impulse-type blades was not. Although the exact reason for this phenomenon is unknown, it is suspected that the location of the minimum-flow area of the blade row is the principal contributing factor. It will be recalled that the reaction-type cascade has its minimum area at the exit of the blade row, whereas the impulse type has its minimum area at the entrance.

A brief investigation was undertaken to determine if the flow from the reaction-type blades could be made to detach from the external fairing. Several devices and methods, both external and internal, were tried and are shown in figure 25. Increasing the length-to-width ratio of the cascade tended to detach the jet. With a large length-to-width ratio, the width of the reversed jet was less and was more easily separable from the skin by a layer of air at atmospheric pressure. The addition of external doors, either bomb-bay or cowl-flap type that would cover the cascade when the reverser is not in use, helped to prevent flow attachment. Pressure gradients and flow direction were such that the flow attached to the door rather than the external fairing. Thus, the presence of an external-attachment surface integral with the reverser appears to be a general method of preventing attachment of the flow to the fairing. As will be recalled from the previous section on target-type reversers, the angled-type reverser was able to attain higher values of reverse-thrust ratio before attachment occurred than an equivalent straight cylindrical reverser. Parallel-cascade end plates as opposed to radial-cascade end plates also tended to detach the jet. With parallel end plates little diffusion of the radial velocity component occurs, and thus the direction of the resultant velocity remains approximately fixed. Other devices such as external blockage in front of the cascade and a boundary-layer tripper in the flow passage of the first blade had no effect in preventing attachment of the flow.

In summary, a tailpipe-cascade reverser in combination with a 0° external fairing can provide a reverse-thrust ratio of 73 percent without attachment of the reversed flow. Cascade blade design, cascade length-to-width ratio, and external cascade doors have small effect on maximum reverse-thrust ratio but considerable effect on the reverse-thrust ratio at which the reversed flow attached to the fairing.

RING-CASCADE THRUST REVERSER

A ring-cascade thrust reverser for which scale-model data were obtained is illustrated in figure 26. The operation of the ring reverser requires the extension of the rings from

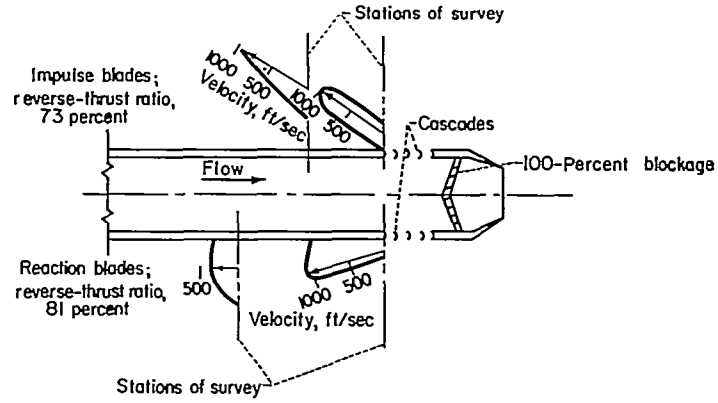

FIGURE 24.—Reversed-flow fields from tailpipe-cascade thrust reverser with impulse and reaction blading. Tailpipe pressure ratio, 2.0.

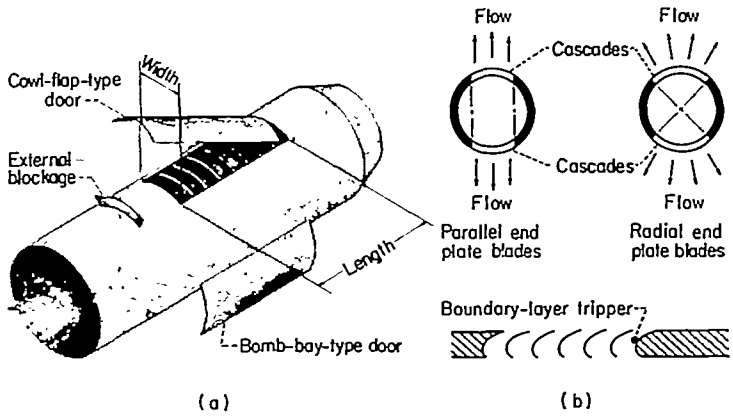

(a) External-flow-detachment devices.
(b) Internal-flow-detachment devices.

FIGURE 25.—Flow-detachment devices for tailpipe-cascade thrust reversers with reaction blading.

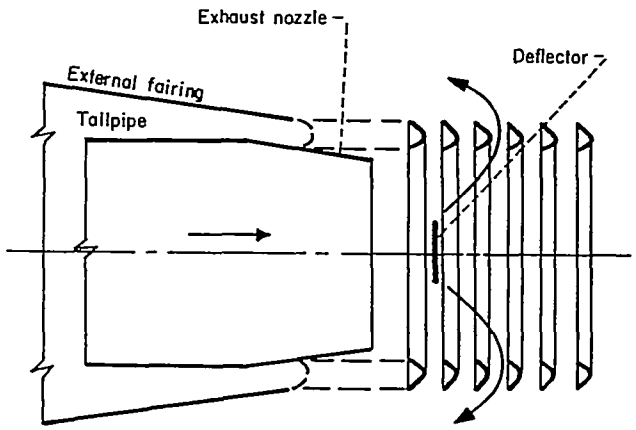

FIGURE 26.—Ring-cascade thrust reverser.

the fairing and the location of a mechanical deflector, as indicated, to deflect the gas into the rings. The deflector can be a bar or a circular disk, depending on the type of ring used. When the gas is deflected, it is all picked up and turned by the rings, providing that there are enough of them and the deflector blockage is sufficient.

The development of the ring-type reverser with mechanical flow deflector initially involved a considerable amount of trial and error. Early attempts using impulse-type (defined earlier for Tailpipe-Cascade Thrust Reverser) rings with a

circular-arc cross section were unsuccessful. Modification of the ring cross section so that it resembled a turbine-nozzle blade in cross section and thus became a reaction-type (discussed previously) ring resulted in considerable improvement in reversal. Figure 27 shows some of the combinations of ring shape and flow deflector that were successful. At the top of figure 27 is a sketch showing the relative positions of the exhaust nozzle, the flow deflector, and the reverser rings. For all the configurations investigated, the inside diameter of the rings was equal to 1.05 exhaust-nozzle diameters, and there was no device on the nozzle for guiding the flow from the nozzle into the rings. As indicated, the single-curvature ring with a 0° entrance angle performed best with a bar-type deflector; whereas, the same ring with a 60° entrance angle gave its best performance with a disk-type deflector. The double-curvature blade investigated also gave optimum performance with a disk deflector. As will be illustrated subsequently, more of these double-curvature blades were required because of the smaller size of the individual blades.

Effect of spacing ratio.—Typical reversal performance obtained with a ring reverser is presented in figure 28 as a function of ring spacing ratio for deflector blockages of 16, 25, and 50 percent of the nozzle area. Ring spacing ratio is defined as the distance between adjacent rings divided by exhaust-nozzle diameter d_n. Data are presented for three ring types, the single-curvature tangential-entry rings, the single-curvature 60°-entry rings, and the double-curvature 60°-entry rings. Optimum deflector shapes for each ring type were used. The sensitivity of the rings to spacing is clearly evident in the figure, there being a very sharp fall-off in reversal as the spacing is varied from the optimum. It will be noted that optimum spacing was different for each ring type. The maximum reversal of 70 percent was obtained with a deflector blockage of 50 percent. Reducing the blockage to 16 percent decreased the maximum reversal 15 to 25 percentage points. The reversal was relatively

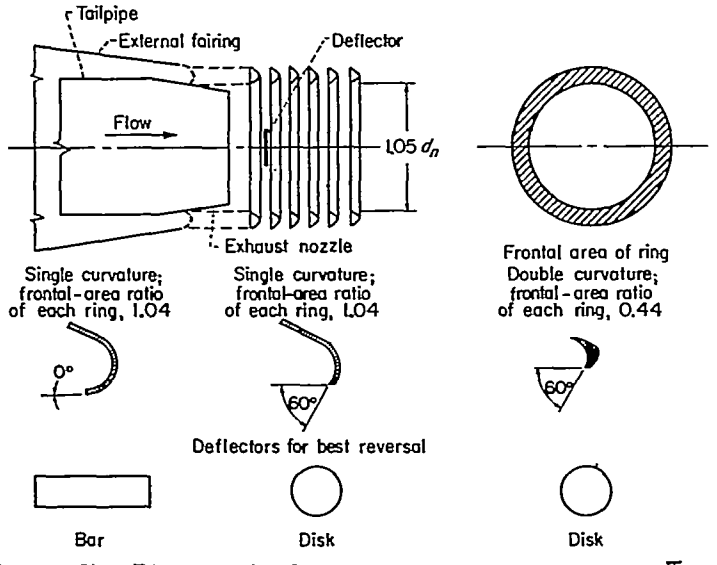

FIGURE 27.—Ring-cascade thrust reverser with optimum ring and deflector combinations.

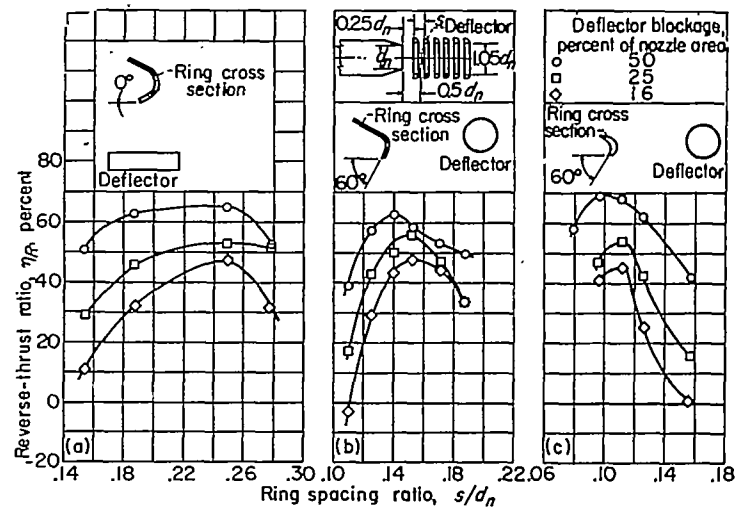

(a) Single-curvature tangential-entry rings; bar deflector; six rings.
(b) Single-curvature 60°-entry rings; disk deflector; six rings.
(c) Double-curvature 60°-entry rings; disk deflector; ten rings.

FIGURE 28.—Effect of ring spacing ratio on performance of ring-cascade thrust reverser. Nozzle pressure ratio, 2.0.

insensitive to first-ring spacing (distance between ring cage and nozzle) within a reasonable range of spacings (0.15 to 0.50 d_n). The optimum spacing of the deflector was found to be close to the minimum distance required for unrestricted nozzle flow, and for the data presented was approximately equal to 0.5 d_n.

Effect of number of rings.—The effect of the number of rings on reverse thrust is illustrated in figure 29. The curve at the left is for the single-curvature large-ring cascade with 60° entrance angle and a deflector blockage of 25 percent. The curve at the right is for the double-curvature small-ring cascade, also with a deflector blockage of 25 percent. It can be seen that increasing the number of the larger blades from two to six resulted in an increase in reverse-thrust ratio from −30 to 60 percent; whereas, increasing the number of smaller blades from four to ten increased the reverse-thrust ratio from −10 to 55 percent.

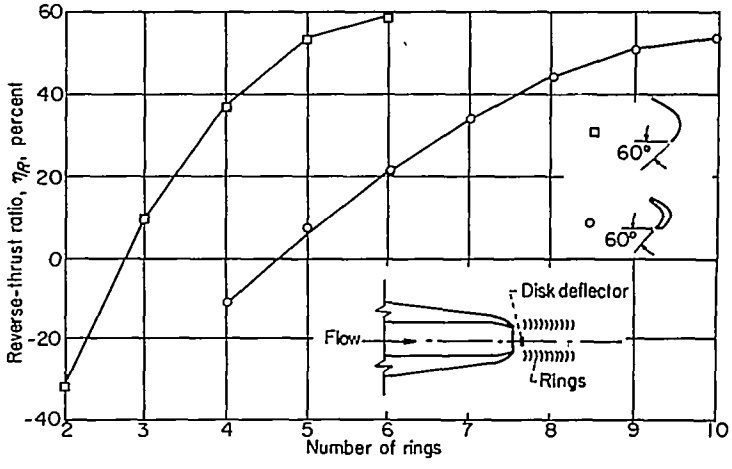

FIGURE 29.—Effect of number of rings on performance of ring-cascade thrust reverser. Nozzle pressure ratio, 2.0; deflector blockage, 25 percent.

Although approximately the same peak performance was obtained in each case, the double-curvature cascade required more blades. As previously mentioned, this is due to the frontal areas of each of the double-curvature blades being considerably less than that of the single-curvature blades (0.44 times the nozzle area compared with 1.04 times the nozzle area).

An attempt was made to eliminate the deflector by using the split rings shown in figure 30. The flow area through these rings decreased along the length of the ring cage. The performance of the split rings is also presented in figure 30. Reverse-thrust ratio is plotted as a function of ring spacing ratio for split rings with various amounts of deflector blockage. With no deflector blockage, forward thrust was merely reduced. Even with blockage the performance of the split rings was inferior to that of the parallel rings with an equal amount of blockage.

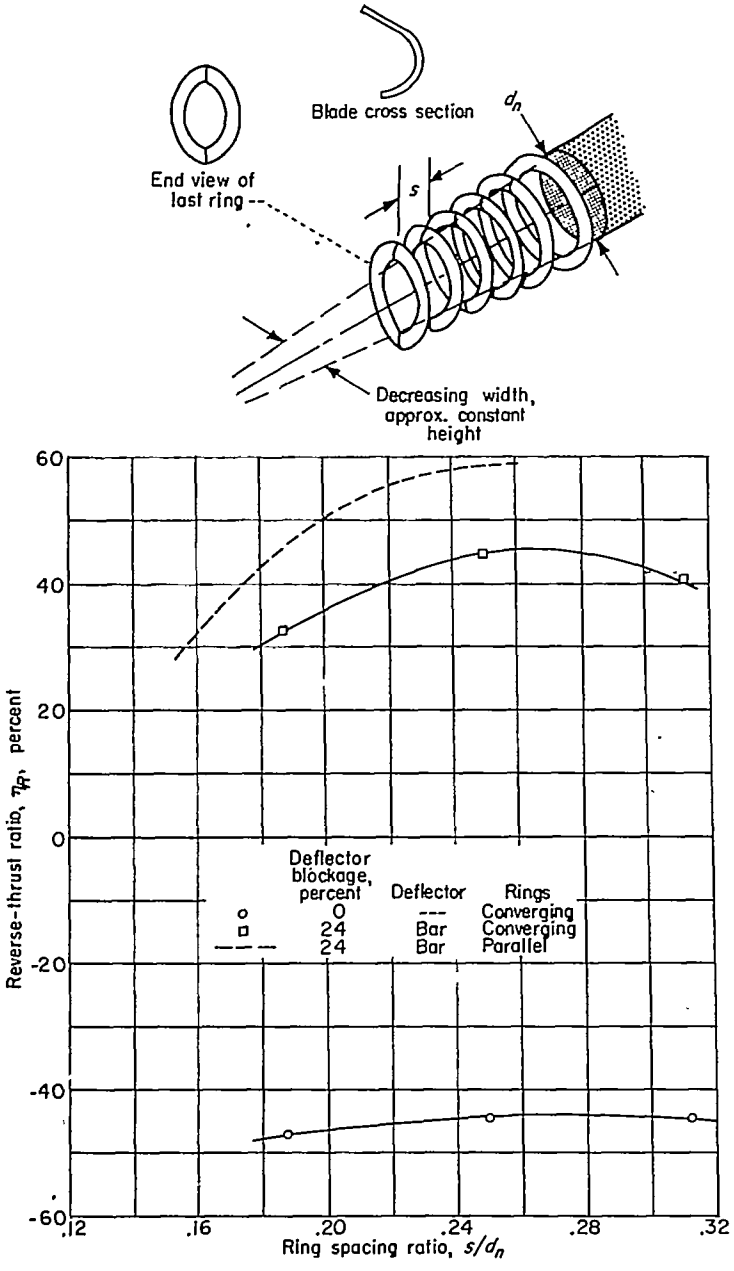

FIGURE 30.—Performance of split-ring-cascade thrust reverser.

External-flow fields and jet attachment.—As with the hemispherical target-type reversers, the ring reversers discharge the reversed gas in a circumferential sheet. This sheet, of course, may be undesirable for the same reason that it was for the target reversers. Attempts were therefore made to interrupt the flow and provide an essentially two-lobed pattern. The results of these attempts are illustrated in figure 31, which shows some of the flow patterns measured at a station 4 nozzle diameters upstream of the nozzle exit. Included for each sketch are the thrust reversal obtained, the type of deflector used, and the blockage of the deflector in terms of the nozzle area. It should be noted that in each case, the reversed flow is attached to the external fairing.

A two-lobed pattern was obtained with 90° top and bottom shrouds installed at the outside of the rings (fig. 31(a)). Unfortunately, only 25-percent reversal was obtained with a 50-percent-blockage bar deflector, and thus this arrangement is considered unsatisfactory. This same arrangement with a 50-percent-blockage disk deflector produced only 8-percent thrust reversal, which is typical of the performance obtained with disk deflector plus shrouds. Therefore, it may be concluded that this combination is undesirable. The remaining configurations considered all used bar deflectors.

The flow pattern shown in figure 31(b) was obtained with 90° top and bottom shrouds installed both at the inside and outside of the rings. In addition to producing a well-defined two-lobed pattern, this arrangement also produced higher reversal (42 percent) than the preceding one using a 50-percent-blockage deflector. The reversal with a 25-percent deflector, however, was insignificant. Improvement in the reversal with a 25-percent deflector was obtained by cutting down the shroud angle from 90° to 60°. The flow pattern and reversal obtained are shown in figure 31(c). Although in this case the reversal was increased to

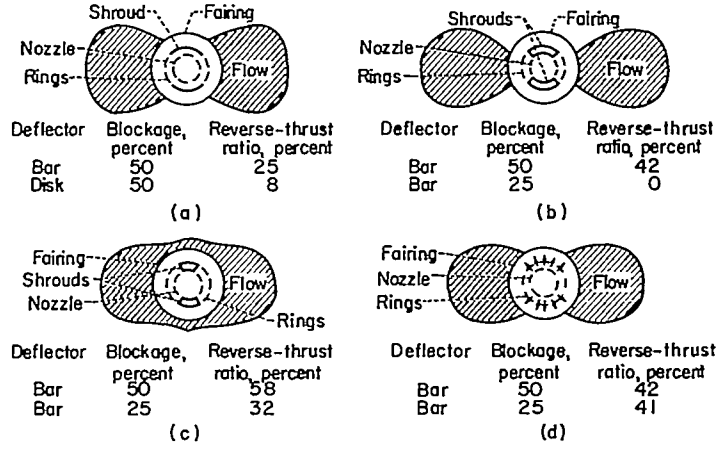

(a) 90° Shrouds outside of rings.
(b) 90° Shrouds outside and inside of rings.
(c) 60° Shrouds outside and inside of rings.
(d) 90° Radial-discharge rings.

FIGURE 31.—Reversed-flow fields from ring-cascade thrust reverser with various types of shrouding. Nozzle pressure ratio, 2.0; external fairing, 7°; six single-curvature rings.

32 percent with the 25-percent deflector and 58 percent with the 50-percent deflector, the flow pattern was somewhat altered so that two distinct lobes were no longer obtained. The reversed flow out of the top and bottom was not excessive, however, and could probably be tolerated in some cases.

Another method of producing a two-lobed reversed-flow pattern that may be satisfactory in some cases consists in providing the rings in the top and bottom quadrants with a 90° exit angle instead of blocking these quadrants with a shroud. The reversed-flow pattern and reversal obtained are shown in figure 31(d). This is the only lobed-flow configuration tested that produced over 40-percent thrust reversal with a 25-percent deflector.

In summary, a ring-cascade reverser can provide a reverse-thrust ratio as high as 69 percent if a circumferential discharge is permitted. Directing the discharge into a two-lobed pattern will decrease the reverse-thrust ratio to about 41 percent. The performance of a ring-cascade reverser is very sensitive to ring shape and spacing.

THRUST MODULATION

Thrust reversers may be classified into one of two categories; an on-off device that provides either full forward or full reverse thrust, or a modulating device that, in addition to these functions, will provide desired intermediate values of thrust.

A modulating-type reverser appears to be much more desirable than an on-off type. With a modulating-type reverser, an airplane could make a landing approach with engines running at full speed and with the required amount of forward or reverse thrust. Upon touchdown only reverser actuation time would elapse before full reverse thrust could be obtained, because the engine would already be at full speed. With a strictly on-off device, however, the engine speed of a standard engine would have to be reduced during final approach. After touchdown a time-consuming engine acceleration would be required before full reverse thrust (or forward thrust in the case of a wave-off) could be obtained.

If modulating the thrust with a reverser does not change the minimum effective-flow area downstream of the turbine, no new engine-control problems are introduced. The mechanical design of some reversers, however, may be such that the effective-flow area is changed during the modulation cycle. If the effective-flow area is increased, engine speed can be maintained if the fuel flow is reduced. Although the thrust output of the engine will be decreased, changes in thrust can still be obtained rapidly because the engine speed will not have been changed.

On the other hand, if the effective-flow area is reduced during the modulation cycle, both the fuel flow and the engine speed must be decreased. Thus, changes in thrust will be accompanied by changes in engine speed, and the response to changes in thrust setting will be slower. Therefore, a reverser should be designed to maintain a constant effective-flow area or, at worst, increase the effective-flow area during the modulation cycle. A reverser should not be so designed that the effective-flow area will be decreased during modulation.

Several reversers have been examined for modulation characteristics, and four of those considered are illustrated in figure 32. A cylindrical target-type reverser for modulating thrust is shown in figure 32(a). In this case the two halves of the cylindrical target have been actuated only part way so that a portion of the exhaust gas is reversed and the remainder is discharged through the opening in the rear.

A tailpipe cascade with the tailpipe blockage and cascade cover so scheduled that the total flow area is kept constant at all times is shown in figure 32(b). During modulation, part of the gas passes through the cascades, and the rest is discharged through the exhaust nozzle.

In figure 32(c) is shown a tailpipe cascade in which the blockage and cascade cover are combined into one unit such that the flow area is increased during modulation (but is the same as the exhaust nozzle when fully actuated). Modulation is obtained the same as before with part of the gas being discharged through the exhaust nozzle and part through the cascade. In this case the modulated thrust obtained will not only be a function of the reverser position but also of the engine on which it is installed.

When a ring reverser is used (fig. 32(d)), with a bar deflector, modulation is obtained by setting the two halves of the bar at various intermediate positions. For full forward thrust, the bar would be folded away and the rings would be drawn forward around the nozzle.

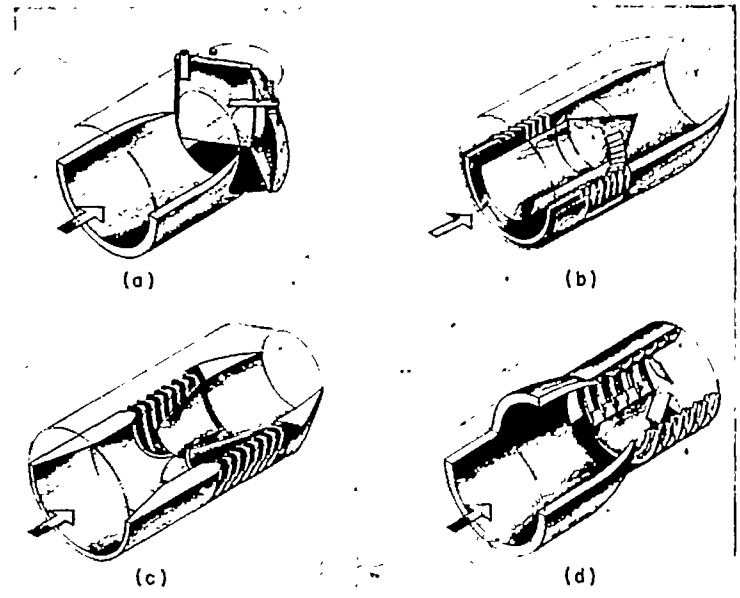

(a) Cylindrical target.
(b) Tailpipe cascade, total flow area constant (tailpipe blockage and cascade cover scheduled).
(c) Tailpipe cascade, total flow area not constant (combined tailpipe blockage and cascade cover).
(d) Ring cascade.

FIGURE 32.—Modulating thrust reversers.

The thrust-modulation characteristics of the four configurations just described are presented in figure 33. The performance is shown as a plot of reverse-thrust ratio against percentage of actuation (the ratio of the reverser position to the final position). The performances of the cylindrical, the cascade with scheduled blockage, and the ring-type reversers are independent of the engine used, but that of the cascade with combined blockage and cascade cover is not. For the latter case the reverser was assumed to be installed on a typical current single-spool turbojet engine. In each case the performance curve is continuous and has sufficient slope that it should not be difficult to set any desired value of thrust. Thus, all these configurations have desirable modulation characteristics. The reduced value of forward thrust of the ring reverser at zero actuation is a result of the rings' picking up a small amount of air and reversing it. Full forward thrust is regained when the rings are retracted.

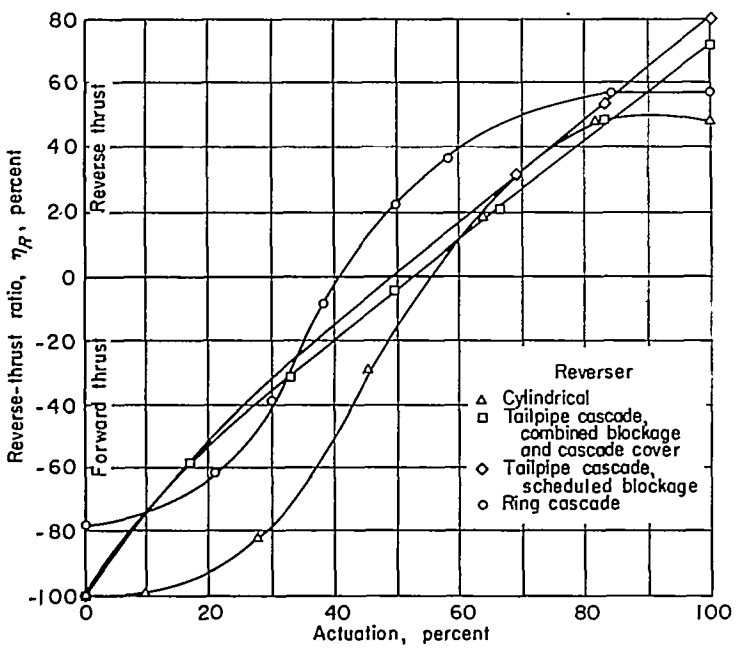

FIGURE 33.—Thrust-modulation characteristics of thrust reversers.

SUMMARY OF RESULTS

Three basic types of thrust reverser were investigated: the target, the tailpipe cascade, and the ring cascade. With a target-type device it was found that a reverse-thrust ratio as high as 84 percent could be achieved if a large enough target were used to turn the gas through a large angle and if the turned gas were allowed to attach to the external fairing. A reverse-thrust ratio of 55 percent could be obtained without reversed-flow attachment to a 7° fairing from a simplified target. Lip and end-plate angles and target frontal area were the most significant geometric variables affecting target-type reverser performance.

A reverse-thrust ratio of 73 percent without attachment to a 0° external fairing was obtained with a tailpipe-cascade reverser. Cascade blade design, cascade length-to-width ratio, and external cascade doors were found to have small effect on reverse-thrust ratio but considerable effect on the reverse-thrust ratio at which the reversed flow attached to the fairing.

A reverse-thrust ratio of 41 percent with controlled attachment to a 7° external fairing could be obtained from a ring-cascade reverser. The performance of a ring-cascade reverser was very sensitive to ring shape and spacing.

Model flow-attachment studies were made in quiescent air. Full-scale tests have indicated that the reingestion characteristics will also depend on airplane speed.

All three types of thrust reverser had satisfactory thrust-modulation characteristics.

Because all three types of thrust reverser can provide over 40-percent reverse-thrust ratio (the amount required to stop future jet aircraft within the confines of existing airports), the selection of a reverser type may be based primarily on installation considerations rather than on performance characteristics.

LEWIS FLIGHT PROPULSION LABORATORY
NATIONAL ADVISORY COMMITTEE FOR AERONAUTICS
CLEVELAND, OHIO, *December 16, 1955*

APPENDIX

SYMBOLS

The following symbols are used in this report:

- A area
- a reverser length, measured parallel to axis of revolution of reverser
- b reverser width, measured perpendicular to axis of revolution of reverser
- c chord
- d diameter
- L length of external door
- l distance between nozzle and target
- P total pressure
- p static pressure
- r radius
- s blade spacing
- ϵ end-plate angle, deg
- η_R reverse-thrust ratio
- λ lip angle, deg

Subscripts:

- H hemisphere
- n nozzle
- nc nozzle closed
- no nozzle open
- r reverser
- t tailpipe
- 0 free stream

REFERENCES

1. Sutter, Joseph: Reverse Thrust for Jet Transports. Paper Presented at meeting SAE, New York (N.Y.), Apr. 12–15, 1954.
2. Steffen, Fred W., McArdle, Jack G., and Coats, James W.: Performance Characteristics of Hemispherical Target-Type Thrust Reversers. NACA RM E55E18, 1955.
3. Steffen, Fred W., and McArdle, Jack G.: Performance Characteristics of Cylindrical Target-Type Thrust Reversers. NACA RM E55I29, 1955.
4. Henzel, James G., Jr., and McArdle, Jack G.: Preliminary Performance Data of Several Tail-Pipe-Cascade-Type Model Thrust Reversers. NACA RM E55F09, 1955.
5. McArdle, Jack G.: Performance Characteristics of Ring-Cascade-Type Thrust Reversers. NACA TN 3838, 1956.