REPORT 1321

THEORETICAL CALCULATION OF THE POWER SPECTRA OF THE ROLLING AND YAWING MOMENTS ON A WING IN RANDOM TURBULENCE [1]

By John M. Eggleston and Franklin W. Diederich

SUMMARY

The correlation functions and power spectra of the rolling and yawing moments on an airplane wing due to the three components of continuous random turbulence are calculated. The rolling moments due to the longitudinal (horizontal) and normal (vertical) components depend on the spanwise distributions of instantaneous gust intensity, which are taken into account by using the inherent properties of symmetry of isotropic turbulence. The results consist of expressions for correlation functions or spectra of the rolling moment in terms of the point correlation functions of the two components of turbulence.

Specific numerical calculations are made for a pair of correlation functions given by simple analytic expressions which fit available experimental data quite well. Calculations are made for four lift distributions. Comparison is made with the results of previous analyses which assumed random turbulence along the flight path and linear variations of gust velocity across the span.

The rolling moment due to lateral (side) gusts, which is small, is expressed in terms of the instantaneous value of the gust near the center line of the fuselage, so that the effect of spanwise variation in gust intensity is ignored. The yawing moments are considered to be proportional to the rolling moments with the constants of proportionality given by simple aerodynamic relations.

INTRODUCTION

The gust velocities acting on an airplane flying through turbulent air are functions of position or time known only in a statistical sense. Consequently, aerodynamic forces and moments produced by the lifting surfaces of the airplane can be known only in a statistical sense. If the statistical characteristics of the turbulence are assumed to be invariant with position along the flight path, flight through turbulent air may be considered to be a stationary random process and the mathematical techniques developed for such processes (see ref. 1, for instance) may then be used in this problem.

This approach has been adopted in many papers on this subject, among them references 2 and 3. Inasmuch as in these papers the motions and forces associated with the longitudinal degrees of freedom were of primary interest, the assumption was made, implicitly, that the gust intensity is uniform along the span at any instant. However, for the problem of analyzing the motions and forces associated with the lateral degrees of freedom, this assumption is inadequate, inasmuch as it implies that the vertical and horizontal gusts produce zero rolling and yawing moments on the wing. This problem has been treated in references 4 and 5 and elsewhere on the basis of the assumption that at any instant the gust intensity varies linearly across the span.

A fundamental method of accounting for the lift on a wing due to random variations of the gust velocities in both the flight-path and the spanwise directions is given in reference 6 for the longitudinal response of an airplane in atmospheric turbulence. The approach is based on the assumption that the turbulence is axisymmetric (according to ref. 7), so that, at any arbitrary time or position in the turbulence, the statistical characteristics of the turbulence encountered by an airplane do not depend on the heading of the airplane. On the basis of this assumption, the variation of gust intensity across the span can be related to the variation of the gust intensity along the flight path.

In the present report the approach of reference 6 is extended to the calculation of the rolling and yawing moments on a wing due directly to vertical gusts, longitudinal gusts (hereinafter referred to as horizontal gusts), and lateral or side gusts. These moments are required as a first step in calculating the motions of a complete airplane in atmospheric turbulence; the moments due to the motions caused by these input moments can be calculated by conventional methods and will not be considered herein.

In the first part of the report, a theoretical analysis is made defining the power spectra of the rolling and yawing moments of a wing in terms of the statistical characteristics of the atmospheric gust velocities. By using an analytical expression to define these characteristics, a numerical solution of the lateral moments is presented in the last part of the report.

SYMBOLS

$a=\beta'\sqrt{1+(k')^2}$	
b	wing span
c	wing chord
$\bar{c}$	wing mean aerodynamic chord
$E(k)$, $K(k)$	complete elliptic integrals of the second and first kind, respectively, of modulus k
f	longitudinal correlation function for isotropic turbulence
F	Fourier transform of f

[1] Supersedes NACA Technical Note 3864 by John M. Eggleston and Franklin W. Diederich, 1956.

g	lateral correlation function for isotropic turbulence
G	Fourier transform of g
h	indicial-response function of time only
h'	indicial-response function of time and displacement
I	Fourier transform of two-dimensional correlation function
$i=\sqrt{-1}$	
k	modulus of elliptic integrals, $\frac{2-\eta}{2+\eta}$
k'	reduced frequency, $\omega L/U$
K_0, K_1	modified Bessel functions of the second kind
$\tilde{K}_0$, $\tilde{K}_1$	incomplete modified Bessel functions of the second kind
l	section lift
L	integral scale of turbulence
M_X	rolling moment
p	rolling velocity
q	dynamic pressure
r	yawing velocity (used only in stability derivatives); linear displacement between any two points
S	wing area
t	time
U	mean forward velocity
$U\tau$	displacement along the flight path
v	component of airplane velocity along positive Y-axis
u_g, v_g, w_g	three components of gust velocity (see fig. 1(a))
X, Y, Z	reference axes (see fig. 1(a))
x	chordwise distance
y	spanwise distance
$\Delta y=y_2-y_1$	
y^*	nondimensional spanwise coordinate, $\frac{y}{b/2}$
α	angle of attack, radians
$\beta'=b/L$	
γ	span influence function
Γ	integral weighting function
$\lambda=U\tau/L$	
η	dummy variable of integration, $y_2^*-y_1^*$
ρ	atmospheric density
τ	dummy variable of time
ω	circular frequency, 2π/Period
C_l	rolling-moment coefficient, $\frac{\text{Rolling moment}}{qSb}$
C_n	yawing-moment coefficient, $\frac{\text{Yawing moment}}{qSb}$
$C_{n_p}=\frac{\partial C_n}{\partial \frac{pb}{2U}}$	
$C_{l_p}=\frac{\partial C_l}{\partial \frac{pb}{2U}}$	
$C_{n_r}=\frac{\partial C_n}{\partial \frac{rb}{2U}}$	
$C_{l_r}=\frac{\partial C_l}{\partial \frac{rb}{2U}}$	
$C_{n_\beta}=\frac{\partial C_n}{\partial \frac{v}{U}}$	
$C_{l_\beta}=\frac{\partial C_l}{\partial \frac{v}{U}}$	
Ψ	correlation function
Φ	power spectral density

Subscripts:

o	trim value
g	gust component

A bar over a quantity denotes the mean value of the quantity. The absolute value of a quantity is denoted by $|\ |$.

THEORETICAL ANALYSIS

PRELIMINARY CONSIDERATIONS

In this section expressions are derived for the power spectra of the rolling and yawing moments of an unswept airplane wing or thin lifting surface of arbitrary plan form due to flight through random atmospheric turbulence. Essentially, the procedure consists of expressing the rolling moment at any arbitrary position along the flight path in terms of the gust velocity at that position, establishing the correlation function between the rolling moments at any two points along the flight path, and transforming this correlation function into an expression for the power spectral density. The power spectrum of the yawing moment is then related to that of the rolling moment through simple aerodynamic relationships.

Assumptions.—The following assumptions are made in the analysis:

(1) The turbulence is homogeneous and isotropic; that is, the statistical characteristics of the turbulence are invariant under a translation or rotation of the space axes (although the results obtained for the vertical component of turbulence require only the somewhat less restricting assumption of axisymmetry).

(2) Time correlations are equivalent to space correlations along the flight path—an assumption usually referred to as Taylor's hypothesis. (See ref. 7.)

(3) The chordwise penetration factor (the indicial-response influence function) for the rolling and yawing moments can be expressed as a product of a function of distance along the flight path (or time) only and distance along the span only.

(4) The wing considered herein is relatively rigid and, as a result of the turbulent velocities, performs small motions about a mean steady flight condition.

The implication of these assumptions and the limitations they impose on the results of the analysis are discussed in a subsequent section of the report.

Coordinate system and gust components.—The system of axes and the local velocity field relative to the lifting surface are shown in figure 1 (a). The velocity at each point in the field is resolved into components lying in the three planes of an orthogonal set of axes, the X-axis of which is tangent at every point to the flight path. Throughout this report these three components are designated as follows: The component alined with the X-axis is referred to as the horizontal gust u_g; the component alined with the Y-axis is referred to as the side gust v_g; and the component alined with the Z-axis is referred to as the vertical gust w_g.

As the wing moves through the local velocity field, the random variations in the horizontal and vertical gust components are defined both in the flight-path direction and in the spanwise direction at every position along the flight path. Random variations of these gust components across the chord are taken into account by indicial-response functions and, hence, need not be considered separately.

The side gust component of the gust velocity field is treated in only a limited manner. Neither the chordwise nor the spanwise variations of v_g are considered along the flight path; rather, v_g is assumed to act on the wing as a point velocity with a variation only along the flight-path direction. Contemporary aircraft exhibit such wide variations in distribution of dihedral across the span that it is doubtful that a generalized analysis could be utilized. The point or centroid analysis should be fairly accurate when the dihedral distribution is predominant over only a small section of the span near the fuselage. Such a distribution is exhibited by an unswept wing with zero geometric dihedral mounted very high or low on a fuselage. For a wing with zero aerodynamic dihedral, this component could be neglected completely.

Definition of gust correlation functions.—In order to define random variations of the gust velocities both along the flight path and across the span of the wing as it moves through the turbulence, it is necessary to define the correlation between any two velocities in the gust field through which the wing passes. The space correlation function of a velocity u is defined in terms of the distance r as

$$\Psi_u(r)=\lim_{X\to\infty}\frac{1}{2X}\int_{-X}^{X}u(r_1)u(r_1+r)dr_1 \tag{1}$$

Von Kármán and Howarth (ref. 8) have shown that, in homogeneous isotropic turbulence, the correlation between two velocity vectors a distance r apart can be defined in terms of two scalar functions $f(r)$ and $g(r)$ and that this relationship is invariant with respect to rotation and reflection of the coordinate axes. These one-dimensional correlation functions relate the paired velocity components obtained by resolving the velocity vector at any two points a distance r apart into two parts: The pair lying along the straight-line path between the points are known as the longitudinal components and the pair normal to the straight-line path are known as the lateral components. These two pairs of components are pictorially shown in figure 1(b). Such velocity components may be measured in wind tunnels downstream of a grid mesh. (See ref. 9.)

In reference 8, it is further shown that these correlation functions are interrelated by the differential equation

$$\frac{r}{2}\frac{df(r)}{dr}+f(r)=g(r) \tag{2}$$

By defining the variable r in the coordinate system of this report and using the correlation tensor of reference 8, a two-dimensional analysis of the turbulence as it affects the wing may be made in terms of $f(r)$ and $g(r)$. The variable in the correlation functions of the horizontal and vertical gust components in the two-dimensional XY-plane of the wing is given simply by

$$r=\sqrt{(\Delta x)^2+(\Delta y)^2}=\sqrt{(U\tau)^2+(\Delta y)^2} \tag{3}$$

The correlation function of the horizontal gust components, as derived from the correlation tensor of reference 8, is defined in terms of x- and y-components of the present analysis by the formula

$$\Psi_{u_g}(\Delta x,\Delta y)=\overline{u_g^2}\left\{\frac{(\Delta x)^2}{(\Delta x)^2+(\Delta y)^2}f\left[\sqrt{(\Delta x)^2+(\Delta y)^2}\right]+\frac{(\Delta y)^2}{(\Delta x)^2+(\Delta y)^2}g\left[\sqrt{(\Delta x)^2+(\Delta y)^2}\right]\right\} \tag{4}$$

The relationship between the components is shown schematically in figure 2 (a).

In a like manner, the correlation function of the vertical gust components affecting the wing, given in terms of the mean-square value of the vertical gust velocity $\overline{w_g^2}$, may be

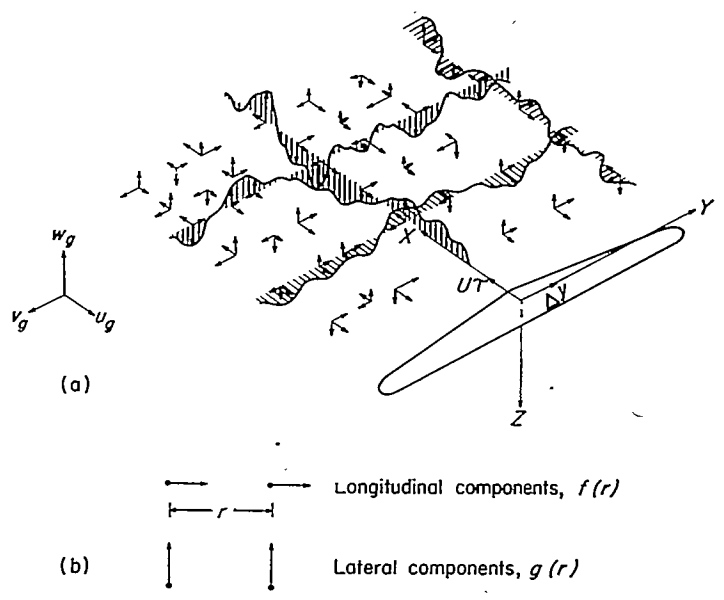

(a) Wing passing through three-dimensional turbulence.
(b) Components of turbulence as a function of distance r.

FIGURE 1.—Sign convention and stability axes of a wing passing through a turbulent velocity field. Arrows denote positive direction, where applicable.

seen to be simply

$$\Psi_{w_g}(\Delta x,\Delta y)=\overline{w_g^2}\,g\left[\sqrt{(\Delta x)^2+(\Delta y)^2}\right] \tag{5}$$

For the case of side gusts acting on a wing, the correlation function would be defined in terms of Δx and Δy if the spanwise correlation were considered. (See fig. 2(b).) Inasmuch as the side gust is considered to act only at a point on the span, Δy is zero, and the correlation function for the side gust in terms of its mean-square value becomes

$$\Psi_{v_g}(\Delta x)=\overline{v_g^2}\,g(\Delta x) \tag{6}$$

Although the mean-square value of each of the three gust components is given separate identity, under the assumption of isotropy

$$\overline{u_g^2}=\overline{v_g^2}=\overline{w_g^2} \tag{7}$$

With the gust-velocity correlation functions thus defined, the forces and moments due to antisymmetric components

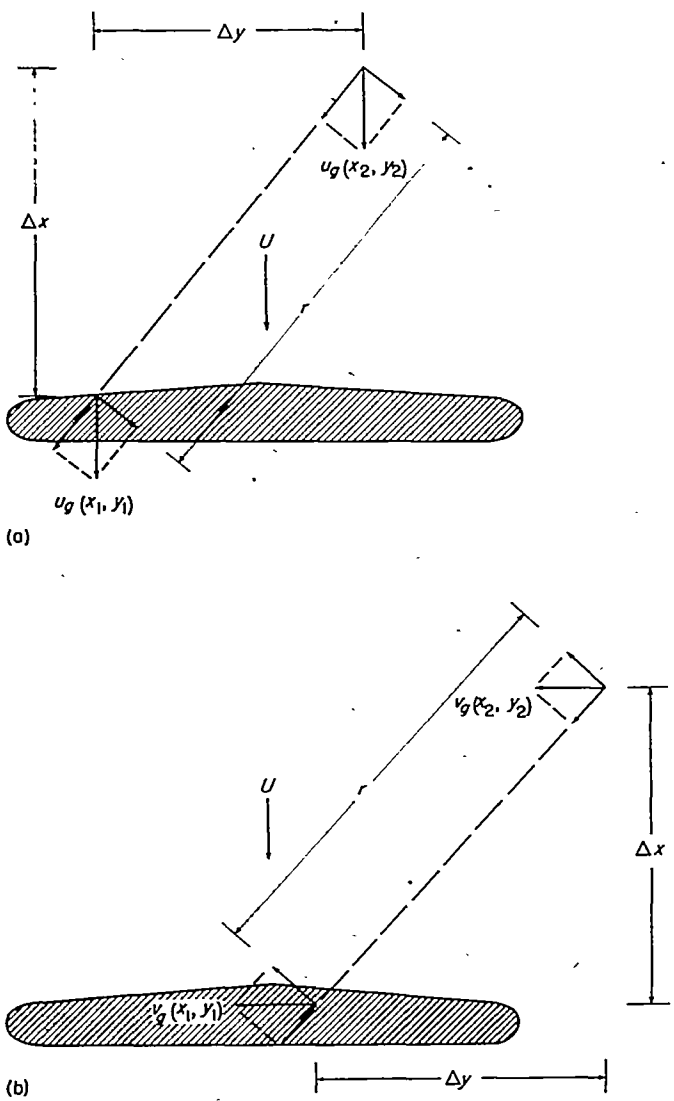

(a). Horizontal gust components.
(b) Side gust components.

FIGURE 2.—Schematic drawing of the relationship between the components of horizontal and side gusts at any two arbitrary points.

of the gust-velocity field acting on a wing passing through that field may be derived in terms of these correlation functions.

ROLLING MOMENT DUE TO GUSTS

Vertical gusts.—The instantaneous wing rolling moment due to vertical gusts can be written in terms of an indicial-response influence function $h'(t,y)$ as

$$M_X(t)=\int_{-\infty}^{\infty}\int_{-b/2}^{b/2}h'(t_1,y)w_g(t-t_1,y)\,dy\,dt_1 \tag{8}$$

According to assumption (3) of the section entitled "Preliminary Considerations" (see also the argument presented in ref. 6), the function $h'(t,y)$ can be expressed in the form

$$h'(t_1,y)=h(t_1)\gamma(y) \tag{9}$$

where $\gamma(y)$ is a steady-state span influence function and $h(t_1)$ contains the unsteady-lift effects. The rolling moment can then also be written as

$$M_X(t)=\int_{-\infty}^{\infty}h(t_1)dt_1\int_{-b/2}^{b/2}\gamma(y)w_g(t-t_1,y)\,dy \tag{10}$$

If the correlation function for the rolling moment is calculated from equation (10) and a power spectrum for the rolling moment is obtained by taking the Fourier transform of the correlation function, the resulting expression may be shown to consist of a product of two functions: One function is the result obtained from quasi-steady considerations alone, and the other is the absolute squared value of the unsteady-lift function for sinusoidal gust penetration such as that given by Sears in reference 10. Consequently, consideration will be confined to an analysis using quasi-steady expressions for the rolling moment; that is, the lag in buildup of lift across the chord of the wing due to the gusts is not included.

In quasi-steady flow, the rolling moment of a wing due to a variable angle-of-attack distribution across the span is given by

$$\begin{aligned}M_X&=qSbC_l\\&=\int_{-b/2}^{b/2}[l(y)]^{\alpha=\alpha_g(y)}y\,dy\end{aligned} \tag{11}$$

where section lift

$$l(y)=c_l(y)qc(y)$$

and local angle of attack due to gusts

$$\alpha_g=w_g/U$$

Now, one theorem of linearized airfoil theory states that the lift (or rolling moment) on a wing due to an arbitrary spanwise angle-of-attack distribution is equal to the integral over the entire wing of the product of the spanwise lift distribution due to a unit constant (or linearly varying) angle of attack and the given arbitrary angle-of-attack distribution. Hence, the rolling moment is also given by

$$qSbC_l=\int_{-b/2}^{b/2}[l(y)]^{\alpha=y}\alpha_g(y)\,dy \tag{12}$$

This theorem is valid not only in steady but also in indicial flow. (See reciprocity theorems of ref. 11.)

When the indicated substitutions are made, the rolling-moment coefficient along the flight path is

$$C_l(x)=\frac{-C_{l_p}}{b^2}\int_{-b/2}^{b/2}\left[\frac{c_l(y)\,c(y)}{-C_{l_p}\bar{c}}\right]^{\alpha=y}\frac{w_g(x,y)}{U}\,dy$$

$$=\frac{-C_{l_p}}{4U}\int_{-1}^{1}\gamma(y^*)w_g(x,y^*)\,dy^* \tag{13}$$

where $y^*=\frac{y}{b/2}$ and the steady-state lift distribution

$$\gamma(y^*)=\left[\frac{c_l(y^*)\,c(y^*)}{-C_{l_p}\bar{c}}\right]^{\alpha=y^*} \tag{14}$$

pertains to a linear antisymmetric angle of attack across the span. It may be seen that, by virtue of its definition, $\gamma(y^*)$ must satisfy the relation

$$\int_0^1\gamma(y^*)\,y^*\,dy^*=2 \tag{15}$$

Horizontal gusts.—In analogy to the analysis of the preceding section, consideration will be confined to the quasi-steady case. When stability axes are used, a change in forward velocity at any spanwise station increases the magnitude but does not change the direction of the lift and drag vectors. Thus, the horizontal-gust contribution to the dynamic pressure is

$$\Delta q(y)=\frac{1}{2}\rho\{[u_g(y)+U]^2-U^2\}$$

$$=\frac{1}{2}\rho(u_g^2+2Uu_g)$$

$$=2q_o\frac{u_g(y)}{U}$$

under the assumption that $u_g\ll U$. When this linearized approximation is used, the lift on each section is proportional to the local angle of attack:

$$\frac{l(u_g)}{l(w_g)}=2\alpha_o\frac{u_g}{w_g}$$

The rolling-moment coefficient due to horizontal-gust velocities is thereby defined as

$$C_l(x)=\frac{-C_{l_p}\alpha_o}{2U}\int_{-1}^{1}\gamma(y^*)u_g(x,y^*)\,dy^* \tag{16}$$

where now

$$\gamma(y^*)\equiv\left[\frac{c_l(y^*)\,c(y^*)}{-C_{l_p}\bar{c}}\right]^{2\alpha_o\frac{u}{U}=y^*} \tag{17}$$

The only difference in evaluating $\gamma(y^*)$ for horizontal and vertical gusts lies in the definition of the parameter having a variation of y^* across the span; for the vertical gust, that parameter is taken as the additional angle of attack and, for the horizontal gust, that parameter is $2\alpha_o\frac{u}{U}$. The condition that

$$\int_0^1\gamma(y^*)y^*\,dy^*\equiv 2$$

remains unchanged.

ANTISYMMETRIC SPAN INFLUENCE FUNCTION $\gamma(y^*)$

The antisymmetric span influence function $\gamma(y^*)$ is defined over the span so that any given distribution of $\gamma(y^*)$ will produce a unit rolling moment. These distributions refer to the span loading due to a linear angle of attack $\alpha=y^*$ for the vertical gust or a linear leading-edge velocity $2\alpha_o\frac{u}{U}=y^*$ for the horizontal gust. Four basic variations of $\gamma(y^*)$ have been considered with the proper constants so that equation (15) is satisfied. The equations for the $\gamma(y^*)$ variations considered are given in table I and plots of these variations are shown in figure 3(a). The names given to the four distributions obtained by rolling the wing refer to the distributions which would be produced by a uniform angle of attack.

CORRELATION FUNCTION OF THE ROLLING MOMENT

Vertical gusts.—The autocorrelation function of the rolling moments due to vertical gusts at any two stations along the path of the wing is defined as

$$\Psi_{C_l}(x_2-x_1)=\lim_{X\to\infty}\frac{1}{2X}\int_{-X}^{X}C_l(x_2)\,C_l(x_1)\,dx_1 \tag{18}$$

With the substitution of the expressions for $C_l(x_2)$ and $C_l(x_1)$ as given by equation (13), the correlation function of equation (18) becomes

$$\Psi_{C_l}(x_2-x_1)=\lim_{X\to\infty}\frac{1}{2X}\int_{-X}^{X}\frac{C_{l_p}^2}{16U^2}\int_{-1}^{1}\gamma(y_1^*)\,w_g(x_1,y_1^*)\,dy_1^*\int_{-1}^{1}\gamma(y_2^*)\,w_g(x_2,y_2^*)\,dy_2^*\,dx_1$$

$$=\frac{C_{l_p}^2}{16U^2}\int_{-1}^{1}\int_{-1}^{1}\gamma(y_1^*)\gamma(y_2^*)\lim_{X\to\infty}\frac{1}{2X}\int_{-X}^{X}w_g(x_1,y_1^*)\,w_g(x_2,y_2^*)\,dx_1\,dy_1^*\,dy_2^*$$

$$=\frac{C_{l_p}^2}{16U^2}\int_{-1}^{1}\int_{-1}^{1}\gamma(y_1^*)\gamma(y_2^*)\Psi_{w_g}(x_2-x_1,y_2^*-y_1^*)\,dy_1^*\,dy_2^* \tag{19}$$

where it is assumed that the functions are convergent under either order of integration. An expression is thus obtained for the correlation function of rolling moment in terms of the correlation function of vertical-gust velocity. In equation (19),

$$\Psi_{w_g}(x_2-x_1,y_2^*-y_1^*)=\lim_{X\to\infty}\frac{1}{2X}\int_{-X}^{X}w_g(x_1,y_1^*)\,w_g(x_2,y_2^*)\,dx_1$$

is the same as the two-dimensional correlation function defined earlier as equation (5) with $x_2-x_1=\Delta x$ and

$$y_2^*-y_1^*=\Delta y^*=\frac{\Delta y}{b/2}.$$

By the proper substitution of variables, the double integrals of equation (19) may be separated into the single integral of the product of the integrated weighting functions of $\gamma(y^*)$ and the correlation function Ψ_{w_g}. Thus, with the substitution of

$$x_2-x_1=U\tau$$

$$y_2^*-y_1^*=\eta$$

equation (19) becomes

$$\Psi_{C_l}(U\tau)=\frac{C_{l_p}^2}{8U^2}\int_0^2\Gamma(\eta)\,\Psi_{w_g}(U\tau,\eta)\,d\eta \tag{20}$$

where

$$\Gamma(\eta)=\int_1^{1-\eta}\gamma(y_1^*)\,\gamma(y_1^*+\eta)\,dy_1^* \tag{21}$$

and

$$\Psi_{w_g}(U\tau,\eta)=\overline{w_g^2}\,g\left[\sqrt{(U\tau)^2+\left(\frac{b\eta}{2}\right)^2}\right] \tag{22}$$

Equation (22) may be recognized as being equivalent to equation (5).

Horizontal gusts.—In an identical manner, the autocorrelation function of rolling coefficient due to horizontal gusts at any two stations along the path of the wing is derived by use of equations (16) and (18):

$$\Psi_{C_l}(x_2-x_1)=\lim_{X\to\infty}\frac{1}{2X}\int_{-X}^{X}C_l(x_2)\,C_l(x_1)\,dx_1$$

$$=\frac{\alpha_o^2C_{l_p}^2}{4U^2}\int_{-1}^{1}\int_{-1}^{1}\gamma(y_1^*)\,\gamma(y_2^*)\,\Psi_{u_g}(x_2-x_1,y_2^*-y_1^*)\,dy_1^*dy_2^*$$

With the same change of variables as in the preceding section,

$$\Psi_{C_l}(U\tau)=\frac{\alpha_o^2C_{l_p}^2}{2U^2}\int_0^2\Gamma(\eta)\,\Psi_{u_g}(U\tau,\eta)\,d\eta \tag{23}$$

where

$$\Psi_{u_g}(U\tau,\eta)=\overline{u_g^2}\left\{\frac{(U\tau)^2}{(U\tau)^2+\left(\frac{b\eta}{2}\right)^2}f\left[\sqrt{(U\tau)^2+\left(\frac{b\eta}{2}\right)^2}\right]+\frac{\left(\frac{b\eta}{2}\right)^2}{(U\tau)^2+\left(\frac{b\eta}{2}\right)^2}g\left[\sqrt{(U\tau)^2+\left(\frac{b\eta}{2}\right)^2}\right]\right\} \tag{24}$$

and equation (24) is now the equivalent of equation (4). The integral weighting function $\Gamma(\eta)$ is the same for both the horizontal- and the vertical-gust contributions to their rolling-moment correlation functions.

INTEGRAL WEIGHTING FUNCTION $\Gamma(\eta)$

The integral weighting function $\Gamma(\eta)$ as defined by equation (21) has been evaluated for the four distributions of $\gamma(y^*)$ given in table I. These values are listed in table II and plotted against η in figure 3(b). It may be shown that the nature of the function is such that the relationship

$$\int_0^2\Gamma(\eta)\,d\eta\equiv 0 \tag{25}$$

must be satisfied for any variation of Γ which pertains to an antisymmetric variation of $\gamma(y^*)$. In table II the elliptic distribution is given in terms of $K(k)$ and $E(k)$, which are complete elliptic integrals of the first and second kind, respectively, of modulus $k=\frac{2-\eta}{2+\eta}$. The derivation of the elliptic weighting function is included in the appendix of the report.

POWER SPECTRA OF THE ROLLING MOMENT

The power spectrum of the rolling-moment coefficient C_l is defined as the Fourier transform of the autocorrelation

TABLE I

VARIATION OF $\gamma(y^*)$

Distribution	$\gamma(y^*)$
Rectangular	$6y^*$
Elliptic	$\frac{32}{\pi}y^*\sqrt{1-y^{*2}}$
Parabolic	$15y^*(1-y^{*2})$
Triangular	$24y^*(1-\lvert y^*\rvert)$

TABLE II

INTEGRAL WEIGHTING FUNCTION $\Gamma(\eta)$

Distribution	$\Gamma(\eta)$	Limits
Rectangular	$6(4-6\eta+\eta^3)$	$0\leqq\eta\leqq 2$
Elliptic	$\frac{512}{15\pi^2}(2+\eta)\,[4\eta(\eta^2-3\eta-1)K(k)+(4+9\eta^2-\eta^4)E(k)]$	$0\leqq\eta\leqq 2$
Parabolic	$\frac{15}{28}(64-336\eta^2+280\eta^3-42\eta^5+3\eta^7)$	$0\leqq\eta\leqq 2$
Triangular	$\frac{288}{15}(2-10\eta^2+5\eta^3+5\eta^4-3\eta^5)$	$0\leqq\eta\leqq 1$
	$\frac{288}{15}(8-20\eta+10\eta^2+5\eta^3-5\eta^4+\eta^5)$	$1\leqq\eta\leqq 2$

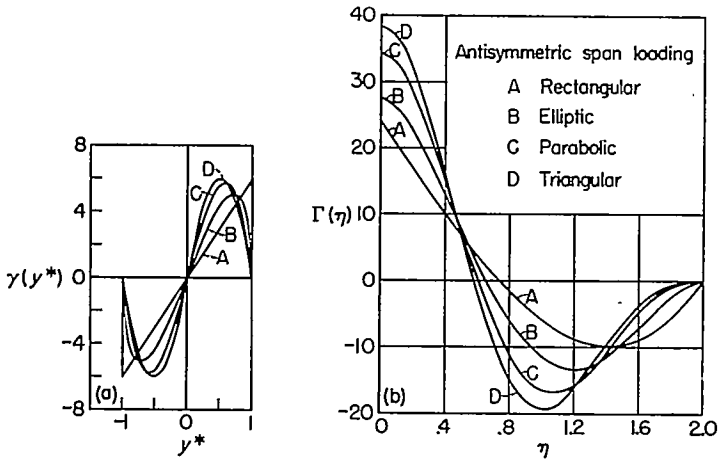

(a) Variation of span influence function.

(b) Variation of integral weighting function.

FIGURE 3.—Variation of span influence function γ and integral weighting function Γ for four types of loading.

function of C_l:

$$\Phi_{C_l}(\omega)=\frac{1}{\pi U}\int_{-\infty}^{\infty}\Psi_{C_l}(U\tau)\,e^{-i\frac{\omega}{U}U\tau}d(U\tau) \tag{26}$$

For the vertical gusts, the power spectrum of the rolling-moment coefficient may be found by substituting the derived relationship for $\Psi_{C_l}(U\tau)$ given by equation (20) into equation (26):

$$\begin{aligned}\Phi_{C_l}(\omega)&=\frac{C_{l_p}^2}{8\pi U^3}\int_{-\infty}^{\infty}e^{-i\frac{\omega}{U}U\tau}\int_0^2\Gamma(\eta)\Psi_{w_g}(U\tau,\eta)\,d\eta\,d(U\tau)\\&=\frac{C_{l_p}^2}{8\pi U^3}\int_0^2\Gamma(\eta)\int_{-\infty}^{\infty}e^{-i\frac{\omega}{U}U\tau}\Psi_{w_g}(U\tau,\eta)\,d(U\tau)\,d\eta\\&=\frac{C_{l_p}^2}{8\pi U^3}\int_0^2\Gamma(\eta)\,I_w\left(\frac{\omega}{U},\eta\right)d\eta\end{aligned} \tag{27}$$

Changing the order of integration here is permissible inasmuch as the integrals of the correlation function of w_g are convergent in both $U\tau$ and η. The integral I_w is defined as

$$I_w\left(\frac{\omega}{U},\eta\right)=\int_{-\infty}^{\infty}e^{-i\frac{\omega}{U}U\tau}\Psi_{w_g}(U\tau,\eta)\,d(U\tau) \tag{28}$$

Similarly, the power spectrum of rolling-moment coefficient due to the horizontal component of gust is obtained from the substitution of equation (23) for the term $\Psi_{C_l}(U\tau)$ appearing in equation (26):

$$\Phi_{C_l}(\omega)=\frac{\alpha_o^2C_{l_p}^2}{2\pi U^3}\int_0^2\Gamma(\eta)\,I_u\left(\frac{\omega}{U},\eta\right)d\eta \tag{29}$$

where the integral I_u in equation (29) is defined as

$$I_u\left(\frac{\omega}{U},\eta\right)=\int_{-\infty}^{\infty}e^{-i\frac{\omega}{U}U\tau}\Psi_{u_g}(U\tau,\eta)\,d(U\tau) \tag{30}$$

Thus, for two of the three components of turbulent gust velocities, the power spectrum of the rolling-moment coefficient is dependent on the integration of a function of the lifting distribution of the wing times a function which represents the Fourier transform of the correlation function of the vertical and horizontal gust components over the wing span.

As previously stated, these results are based on quasi-steady considerations. Unsteady-lift effects can be taken into account simply by multiplying the power spectral density of the rolling moment due to each gust component by the function $\left|\varphi\left(\frac{\omega c}{2U}\right)\right|^2$, where φ is the Sears function given in reference 10.

APPROXIMATION FOR SIDE GUSTS

As pointed out previously, the side gust is treated here only in an approximate manner; that is, the spanwise effect is neglected. Based on this approximation, the rolling-moment coefficient is defined as

$$C_l(x)=C_{l_\beta}\frac{v_g(\Delta x)}{U} \tag{31}$$

The correlation function is defined by

$$\Psi_{C_l}(U\tau)=\frac{C_{l_\beta}^2\overline{v_g^2}}{U^2}\,g(U\tau) \tag{32}$$

and the power spectrum is defined by

$$\Phi_{C_l}(\omega)=\frac{C_{l_\beta}^2\overline{v_g^2}}{U^2}\,G(\omega) \tag{33}$$

where

$$G(\omega)=\frac{1}{\pi U}\int_{-\infty}^{\infty}e^{-i\frac{\omega}{U}U\tau}g(U\tau)\,d(U\tau) \tag{34}$$

RELATIONS BETWEEN THE YAWING AND THE ROLLING MOMENTS

No attempt is made herein to calculate directly the yawing moment due to atmospheric turbulence. Because of the more complicated nature of the phenomena which give rise to drag, as compared with those which give rise to lift, such an undertaking would be quite difficult. Furthermore, in view of the fact that the yawing moments on the wing due to turbulence are relatively small, a detailed analysis would not generally be warranted. In this section, therefore, an approximate procedure is outlined for obtaining the yawing moments from the rolling moments.

The yawing-moment coefficient due to sideslip can be expressed in the form

$$C_n=C_{n_\beta}(\alpha)\beta$$

where, in this case, α is the sum of the trim angle α_o and the instantaneous mean vertical-gust angle $\frac{\overline{w_g}}{U}$, and where β is

the instantaneous mean side-gust angle $\frac{\overline{v_g}}{U}$, so that

$$C_n=C_{n_\beta}(\alpha_o)\frac{\overline{v_g}}{U}+\left(\frac{\partial C_{n_\beta}}{\partial\alpha}\right)_{\alpha_o}\frac{\overline{w_g}}{U}\frac{\overline{v_g}}{U}$$

where the second term is of higher order and is neglected. Similarly, differences in v_g along the span give rise to higher order terms.

The rolling moment can be expressed in the same form, so that the relationship between the yawing and rolling moments due to side gusts is given by

$$C_n(v_g)=\left(\frac{C_{n_\beta}}{C_{l_\beta}}\right)_{\alpha_o}C_l(v_g) \tag{35}$$

Actually, this contribution to the yawing moment is generally negligible and is included here primarily for the sake of completeness.

For the yawing moments due to vertical and horizontal gusts, similar reasoning may be employed. The yawing moment in these cases arises from the antisymmetric part of the instantaneous angle-of-attack distribution due to turbulence, as does the rolling moment, so that the two moments may be expected to be approximately proportional to each other; that is,

$$C_n(w_g)=\left(\frac{C_{n_p}}{C_{l_p}}\right)_{\alpha_o}C_l(w_g) \tag{36}$$

$$C_n(u_g)=\left(\frac{C_{n_r}}{C_{l_r}}\right)_{\alpha_o}C_l(u_g) \tag{37}$$

In essence, these relations imply that the yawing moment due to a given instantaneous spanwise gust distribution is the same as the yawing moment due to a linear gust distribution which has the same rolling moment. The deviation of the actual distribution from a linear one results in small differences in the vortex field and, thus, in small differences in the induced downwash. These differences lead to a contribution to the yawing moment which is believed to be small and, hence, has been ignored.

In terms of their power spectra, the yawing moments are defined as

$$\left.\begin{aligned}\Phi_{C_n}(\omega)\Big|_{u_g}&=\left(\frac{C_{n_r}}{C_{l_r}}\right)^2_{\alpha_o}\Phi_{C_l}(\omega)\Big|_{u_g}\\ \Phi_{C_n}(\omega)\Big|_{v_g}&=\left(\frac{C_{n_\beta}}{C_{l_\beta}}\right)^2_{\alpha_o}\Phi_{C_l}(\omega)\Big|_{v_g}\\ \Phi_{C_n}(\omega)\Big|_{w_g}&=\left(\frac{C_{n_p}}{C_{l_p}}\right)^2_{\alpha_o}\Phi_{C_l}(\omega)\Big|_{w_g}\end{aligned}\right\} \tag{38}$$

The power spectra of the rolling moments are defined in the preceding sections.

APPLICATION

APPROXIMATIONS TO THE ONE-DIMENSIONAL (POINT) CORRELATION FUNCTIONS

In order to evaluate the effects considered in the preceding part of the report, calculations will now be made by using the results derived therein. These calculations will be based on a simple analytical expression for the longitudinal point correlation function which has been suggested in reference 12 on the basis of measurements in wind tunnels:

$$f(r)=e^{-\frac{|r|}{L}} \tag{39}$$

where L is the longitudinal scale of turbulence defined for any longitudinal correlation function $f(r)$ by

$$L=\int_0^\infty f(r)\,dr \tag{40}$$

The characteristics of clear-air turbulence measured in the atmosphere (ref. 13) may be shown to be reasonably well represented by equation (39), with a value of L of approximately 1,000 to 2,000 feet. There are some theoretical objections to this function—primarily the fact that it has a nonvanishing slope as $r\rightarrow 0$ and, hence, that the associated power spectrum does not decrease rapidly enough for very short wavelengths. These conditions imply that the mean square of the derivative of the gust velocity with respect to the space coordinate is infinite. However, from available measurements on atmospheric turbulence, it appears that equation (39) remains valid to distances which are small compared with the span of the airplane (on the order of several inches), and the behavior of the spectrum at very short wavelengths is relatively unimportant because airplanes cannot respond to them to any appreciable extent. Therefore, in the absence of more reliable information all calculations described in this report are based on equation (39).

The corresponding lateral correlation function related to $f(r)$ by equation (2) is found to be

$$g(r)=\left(1-\frac{|r|}{2L}\right)e^{-\frac{|r|}{L}} \tag{41}$$

A plot of the functions given by equations (39) and (41) is shown in figure 4. Their respective power spectra, denoted

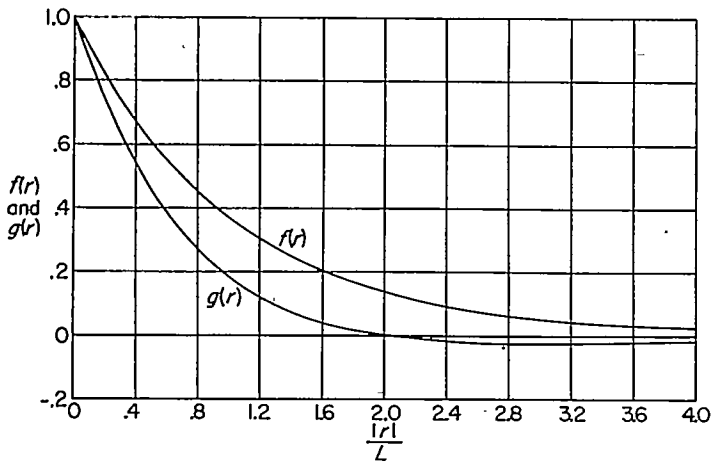

FIGURE 4.—Variation of lateral and longitudinal correlation functions with $|r|/L$.

by $G(k')$ and $F(k')$ where $k'=\frac{\omega L}{U}$, are given by

$$F(k')=\frac{2L}{\pi U}\frac{1}{1+(k')^2} \tag{42}$$

$$G(k')=\frac{L}{\pi U}\frac{1+3(k')^2}{[1+(k')^2]^2} \tag{43}$$

These power spectra are plotted to a logarithmic scale in figure 5, where it may be noted that the asymptotic slope as $k'\rightarrow\infty$ has a value of -2.0.

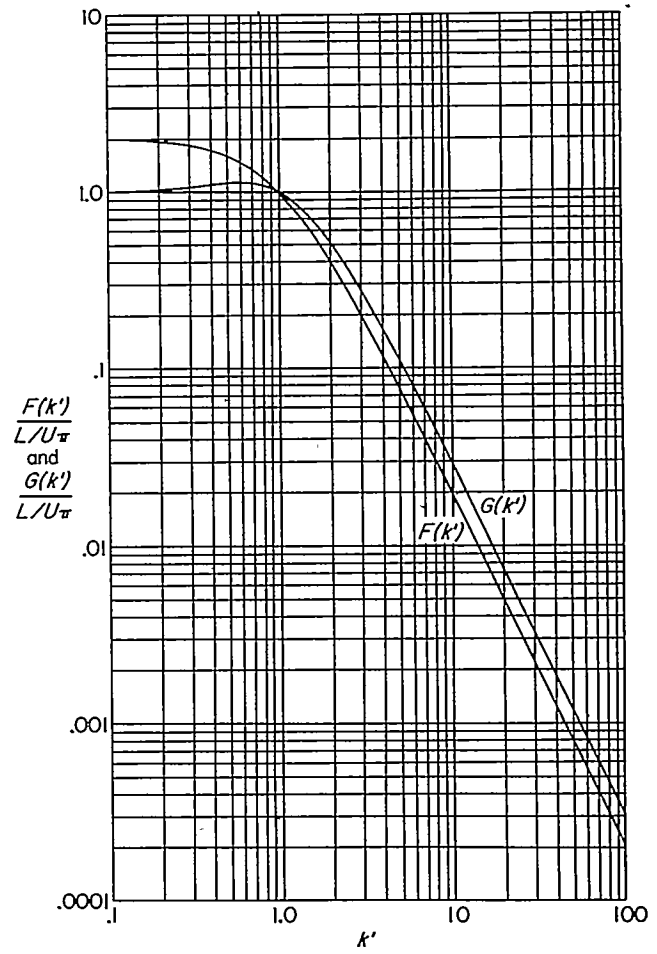

FIGURE 5.—Power spectra of lateral and longitudinal components of isotropic atmospheric turbulence.

CALCULATIONS FOR VERTICAL GUSTS

Rolling-moment correlation function.—When equation (41) is substituted into equation (22) with $r=\sqrt{(U\tau)^2+\left(\frac{b\eta}{2}\right)^2}$, the correlation function defined by equation (22) becomes

$$\Psi_{w_g}(U\tau,\eta)=\overline{w_g^2}\left[1-\frac{1}{2L}\sqrt{(U\tau)^2+\left(\frac{b\eta}{2}\right)^2}\right]e^{-\frac{1}{L}\sqrt{(U\tau)^2+\left(\frac{b\eta}{2}\right)^2}} \tag{44}$$

Inasmuch as the evaluation of the rolling-moment correlation function, as such, is not necessary to the analysis of this report, only limited consideration is given to the calculation of autocorrelation functions. Equation (20) has been evaluated in closed form for the case of the rectangular distribution of the span influence function $\gamma(y^*)$ as given in tables I and II:

$$\begin{aligned}\Psi_{C_l}(U\tau)&=\frac{3\overline{w_g^2}C_{l_p}^2}{4U^2}\int_0^2(4-6\eta^2+\eta^3)\left[1-\frac{1}{2L}\sqrt{(U\tau)^2+\left(\frac{b\eta}{2}\right)^2}\right]e^{-\frac{1}{L}\sqrt{(U\tau)^2+\left(\frac{b\eta}{2}\right)^2}}d\eta\\&=\frac{3\overline{w_g^2}C_{l_p}^2}{\beta'^4U^2}\Big\{4(\lambda^2+6+\beta'^2)\sqrt{\beta'^2+\lambda^2}e^{-\sqrt{\beta'^2+\lambda^2}}+(12\lambda^2-\beta'^2\lambda^2+24+12\beta'^2)e^{-\sqrt{\beta'^2+\lambda^2}}-\\&\quad(4\lambda^3+12\lambda^2-3\beta'^2\lambda^2+24\lambda+24)e^{-\lambda}+\beta'^3\lambda[\tilde{K}_1(\beta',\lambda)-\lambda\tilde{K}_0(\beta',\lambda)]\Big\}\end{aligned} \tag{45}$$

where $\tilde{K}_0$ and $\tilde{K}_1$ are defined in reference 6 as incomplete modified Bessel functions where

$$\tilde{K}_\nu(\beta',\lambda)=\int_0^{\sinh^{-1}\frac{\beta'}{\lambda}} e^{-\lambda\cosh\theta}\cosh\nu\theta d\theta \tag{46}$$

and

$$\beta'=\frac{b}{L} \qquad \lambda=\frac{U\tau}{L}$$

These two parameters represent the ratios of the distances b and $U\tau$ to the integral scale of turbulence L. The parameter β' reflects the size of the wing span relative to the characteristic size of the turbulence and, as such, is one of the more important parameters appearing in all the calculations involving spanwise correlation. It effectively scales the magnitude and shape of the correlation functions and power spectra and, in the limit as $\beta'\rightarrow 0$, the equations for the antisymmetric moments likewise go to zero inasmuch as no rolling or yawing moment will exist when a finite span shrinks to a point.

The parameter λ is a measure of the flight-path distance relative to the characteristic size of the turbulence and, in the limit as $\lambda\rightarrow 0$, the correlation function must reduce to the mean square value of the rolling-moment coefficient; hence,

$$\begin{aligned}\overline{C_l^2}&=\Psi_{C_l}(\lambda=0)\\&=\frac{3\overline{w_g^2}C_{l_p}^{\ 2}}{\beta'^4U^2}[(3\beta'^3+12\beta'^2+24\beta'+24)e^{-\beta'}+\beta'^3-24]\end{aligned} \tag{47}$$

Inasmuch as no adequate tables appear to be available for the functions $\tilde{K}_0$ and $\tilde{K}_1$, a numerical evaluation of equation (45) has not been made. However, an analysis of this correlation function with other approximations for $f(r)$ indicates that the effect of span loading is minor and that a reduction in β' attenuates the correlation function.

Evaluation of $I_w\left(\frac{\omega}{U},\eta\right)$.—For the vertical gust component, the integral definition of $I_w\left(\frac{\omega}{U},\eta\right)$ is given by equation (28) whereas $\Psi_{w_g}(U\tau,\eta)$ is now defined by equation (44). The indicated integration may be performed in closed form as a function of η and the reduced frequency parameter k'. Thus,

$$\begin{aligned}I_w\left(\frac{\omega}{U},\eta\right)&=\overline{w_g^2}\int_{-\infty}^{\infty}e^{-i\frac{\omega}{U}U\tau}\left[1-\frac{1}{2L}\sqrt{(U\tau)^2+\left(\frac{b\eta}{2}\right)^2}\right]e^{-\frac{1}{L}\sqrt{(U\tau)^2+\left(\frac{b\eta}{2}\right)^2}}d(U\tau)\\&=\overline{w_g^2}L\left\{\frac{-\left(\frac{\beta'\eta}{2}\right)^2}{1+(k')^2}K_0\left[\frac{\beta'\eta}{2}\sqrt{1+(k')^2}\right]+\frac{\frac{\beta'\eta}{2}[1+3(k')^2]}{[1+(k')^2]^{3/2}}K_1\left[\frac{\beta'\eta}{2}\sqrt{1+(k')^2}\right]\right\}\end{aligned} \tag{48}$$

where

$$k'=\frac{\omega L}{U}$$

and K_0 and K_1 are modified Bessel functions of the second kind of order 0 and 1, respectively.

A plot of equation (48) is shown in figure 6 as a function of the frequency parameter k', for a range of values of $\beta'\eta/2$ from 0 to 1.0. Although the physical significance of the function I_w is rather obscure, the plots are useful in the subsequent numerical integration of the product of I_w and Γ:

Power spectrum of rolling moment.—In general, the analytical solution of equation (27) for the power spectrum of the rolling-moment coefficient due to vertical gusts, when possible, is a tedious process. Numerical integration by means of either Simpson's rule or some integration process of higher order is generally preferable to integration in closed form. However, the analytical evaluation of equation (27) for the case of a wing with rectangular span loading is given here in order to illustrate some of the characteristics of the equations. After the indicated substitutions are made, equation (27) becomes

$$\Phi_{C_l}(k')=\frac{6\overline{w_g^2}LC_{l_p}^{\ 2}}{8\pi U^3}\int_0^2(4-6\eta+\eta^3)\left[\frac{-\left(\frac{\beta'\eta}{2}\right)^2}{1+(k')^2}K_0+\frac{\frac{\beta'\eta}{2}[1+3(k')^2]}{[1+(k')^2]^{3/2}}K_1\right]d\eta$$

for which the integrated solution is

$$\Phi_{C_l}(k')=\frac{18\overline{w_g^2}LC_{l_p}^{\ 2}}{\pi U^3 a^4[1+(k')^2]^2}\Big(a^3(k')^2\int_0^a K_0(x)dx+\{a^4+16a^2[1-(k')^2]\}K_0(a)+$$
$$\{2a^3[3-(k')^2]+32a[1-(k')^2]\}K_1(a)+2a^2[1-3(k')^2]-32[1-(k')^2]\Big) \tag{49}$$

where $a=\beta'\sqrt{1+(k')^2}$, $k'=\frac{\omega L}{U}$, and $K_0(a)$ and $K_1(a)$ are modified Bessel functions of the second kind[2] of argument a. Equation (49) is plotted in figure 7 (a) as a function of k' for a range of β' between 0.03125 and 1.0.

For small values of frequency ω (and hence k') or scale factor β', equation (49) becomes poorly behaved because the solution takes the form of small differences of high-order terms. The reason for this may be seen by expanding the Bessel functions in their power-series form and grouping like powers of the variable a. The coefficients of the first three terms of the power series a^{-4}, a^{-2}, and a^0 (which are the predominant terms for values of $a<1$) are identically zero. Under these conditions, small computing errors or the lack of significant figures will cause large inaccuracies in the numercial evaluation of the function.

The difficulties just described may be overcome somewhat

[2] Values for the integral of K_0 may be found in several publications, one of which is reference 14, table 2 (Zahlentafel 2). A comprehensive listing of other available mathematical tables including these Bessel functions is given in reference 15.

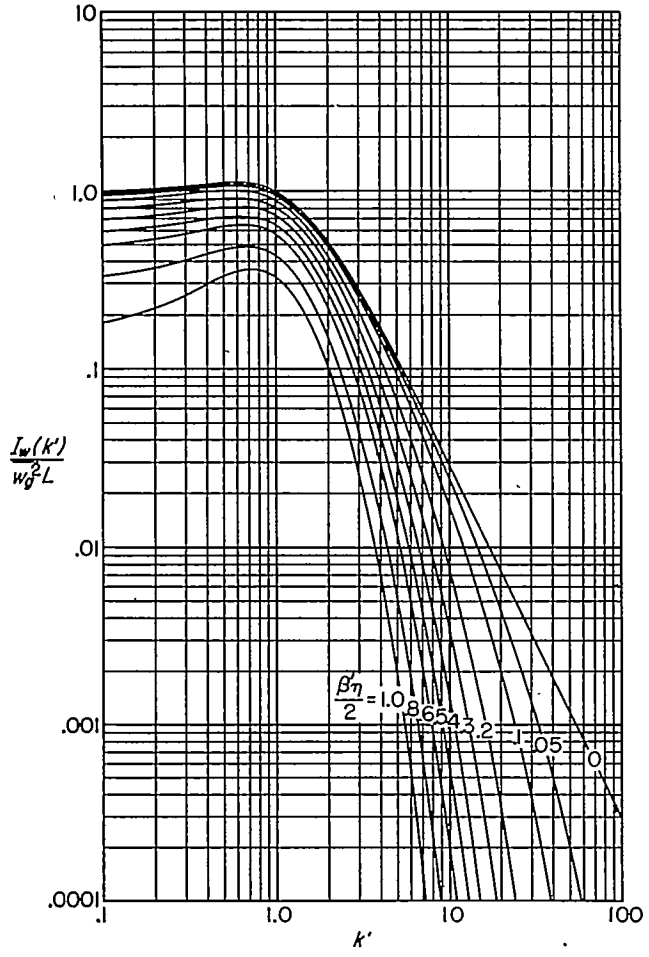

FIGURE 6.—Variation of vertical-gust weighting parameter $\frac{I_w(k')}{\overline{w_g^2}L}$ for a number of values of $\beta'\eta/2$.

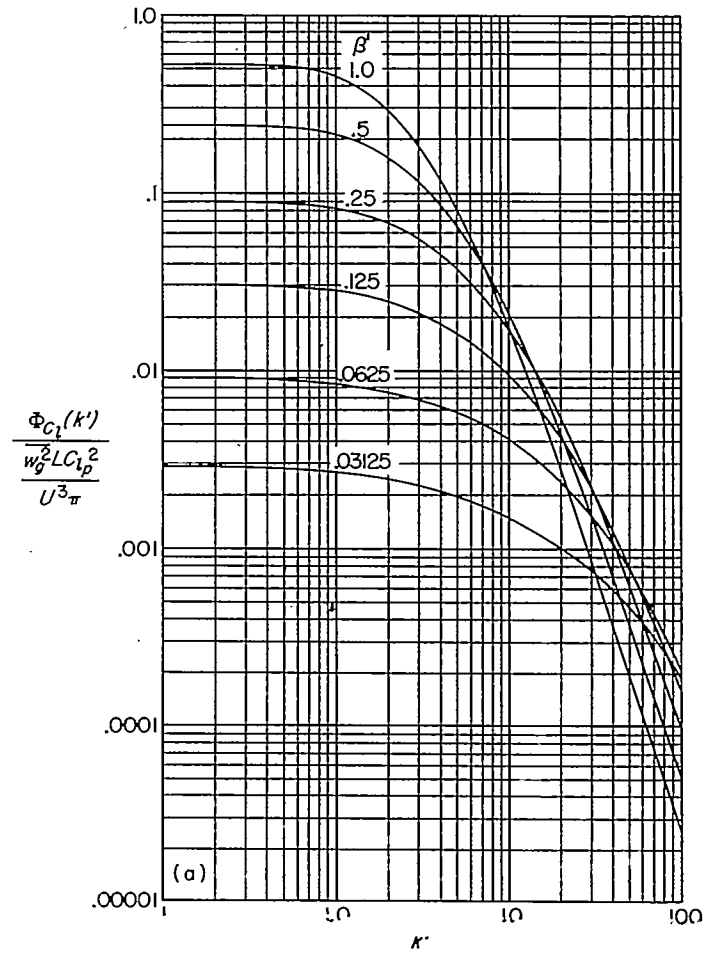

(a) Rectangular span loading.

FIGURE 7.—Power spectra of rolling moment of wing due to vertical gusts.

by evaluating equation (49) for the limiting case of $k'=0$:

$$\Phi_{C_l}(k'=0)=\frac{18\overline{w_g^2}LC_{l_p}^2}{\pi U^3\beta'^4}\left[(\beta'^4+16\beta'^2)K_0(\beta')+(6\beta'^3+32\beta')K_1(\beta')+2\beta'^2-32\right] \tag{50}$$

When the Bessel functions are again expanded in powers of β', only several terms are needed to evaluate the function at small values of β'. As before, the coefficients of all negative orders and the zero order of β' are identically zero.

The physical necessity that, as the span b approaches zero, the expression for the power spectrum of the rolling-moment coefficient must also approach zero is satisfied by equation (49) inasmuch as the lowest order term with a nonzero coefficient appearing in the equation is a^2 (as pointed out above); that is, for $b\rightarrow 0$,

$$\Phi_{C_l}(\omega)\approx(\text{Constant})\ a^2=0$$

In order to compute Φ_{C_l} for the other three types of distribution of wing loading given in tables I and II, a numerical-integration process involving Simpson's three-point rule of integration was employed. The power spectra thus obtained are plotted in figures 7 (b), (c), and (d). This method was also used for the rectangular lift distribution and was found to give good agreement with the analytical results.

It is of interest to note that whereas the power spectra of the vertical gust approach a logarithmic decrement of -2 (see fig. 5), the rolling-moment power spectra shown in figure 7 approach a decrement of -3. At the low-frequency end of the spectrum (long wavelengths) the power appears to approach a constant which is zero only when β', the ratio of span to scale of turbulence, is zero.

Some simplified approaches to the calculation of the rolling power of gusts (for example, ref. 4) lead to the result that the spectrum of the rolling power of the vertical gust appears as the first derivative (slope) of the vertical-gust spectrum. As may be seen from figure 7, such an approximation is justified only in a very small band of frequencies for wings having small values of β'.

CALCULATIONS FOR HORIZONTAL GUSTS

Rolling-moment correlation function.—When the expressions for $f(r)$ and $g(r)$ given by equations (39) and (41) are substituted into equation (24) with $r=\sqrt{(U\tau)^2+\left(\frac{b\eta}{2}\right)^2}$, the one-dimensional correlation function for horizontal gusts becomes

$$\Psi_{u_g}(U\tau,\eta)=\overline{u_g^2}\left[1-\frac{1}{2L}\frac{\left(\frac{b\eta}{2}\right)^2}{\sqrt{(U\tau)^2+\left(\frac{b\eta}{2}\right)^2}}\right]e^{-\frac{1}{L}\sqrt{(U\tau)^2+\left(\frac{b\eta}{2}\right)^2}} \tag{51}$$

The correlation function of rolling moment is obtained by inserting equation (51) into equation (23) and integrating. For a rectangular distribution of $\gamma(y^*)$,

$$\Psi_{C_l}(U\tau)=\frac{3\overline{u_g^2}\alpha_0^2C_{l_p}^2}{U^2}\int_0^2(4-6\eta+\eta^3)\left[1-\frac{1}{2L}\frac{\left(\frac{b\eta}{2}\right)^2}{\sqrt{(U\tau)^2+\left(\frac{b\eta}{2}\right)^2}}\right]e^{-\frac{1}{L}\sqrt{(U\tau)^2+\left(\frac{b\eta}{2}\right)^2}}\,d\eta$$

$$=\frac{24\overline{u_g^2}\alpha_0^2C_{l_p}^2}{U^2\beta'^4}\left\{\frac{\beta'^3}{2}\lambda\tilde{K}_1(\beta',\lambda)+2\left[(\beta'^2+6)\sqrt{\beta'^2+\lambda^2}+3\beta'^2+2\lambda^2+6\right]e^{-\sqrt{\beta'^2+\lambda^2}}-4(\lambda^2+3\lambda+3)e^{-\lambda}\right\} \tag{52}$$

and

$$\overline{C_l^2}=\frac{48\overline{u_g^2}\alpha_0^2C_{l_p}^2}{U^2\beta'^4}\left[(\beta'^3+3\beta'^2+6\beta'+6)e^{-\beta'}-6\right] \tag{53}$$

As in the case of the vertical gust, the correlation function has not been calculated for the other three distributions of $\gamma(y^*)$ for the reasons already given.

Evaluation of $I_u\left(\frac{\omega}{U}, \eta\right)$.—The evaluation of I_u, as defined by equation (30) for the case of the horizontal gust, is given by the expression

$$I_u\left(\frac{\omega}{U}, \eta\right)=\overline{u_g^2}\int_{-\infty}^{\infty} e^{-i\frac{\omega}{U}U\tau}\left[1-\frac{1}{2L}\frac{\left(\frac{b\eta}{2}\right)^2}{\sqrt{(U\tau)^2+\left(\frac{b\eta}{2}\right)^2}}\right]e^{\frac{1}{L}\sqrt{(U\tau)^2+\left(\frac{b\eta}{2}\right)^2}}\,d(U\tau)$$

$$=\overline{u_g^2}L\left\{\frac{2\left(\frac{\beta'\eta}{2}\right)}{\sqrt{1+(k')^2}}K_1\left[\frac{\beta'\eta}{2}\sqrt{1+(k')^2}\right]-\left(\frac{\beta'\eta}{2}\right)^2K_0\left[\frac{\beta'\eta}{2}\sqrt{1+(k')^2}\right]\right\} \tag{54}$$

where $k'=\frac{\omega L}{U}$, and K_0 and K_1 are the modified Bessel functions of the second kind of argument $\frac{\beta'\eta}{2}\sqrt{1+(k')^2}$.

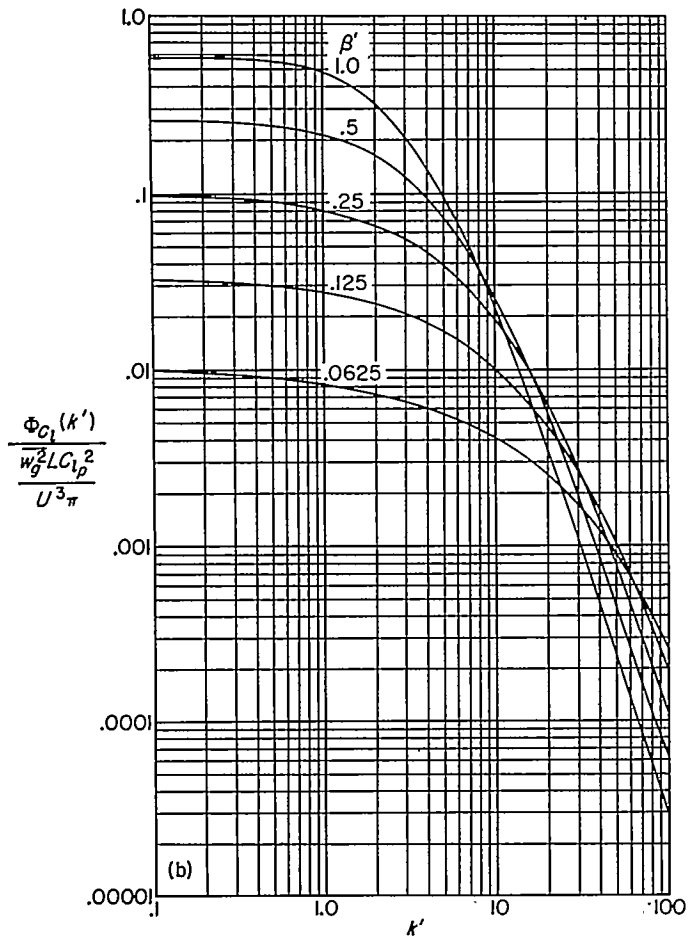

(b) Elliptic span loading.

FIGURE 7.—Continued.

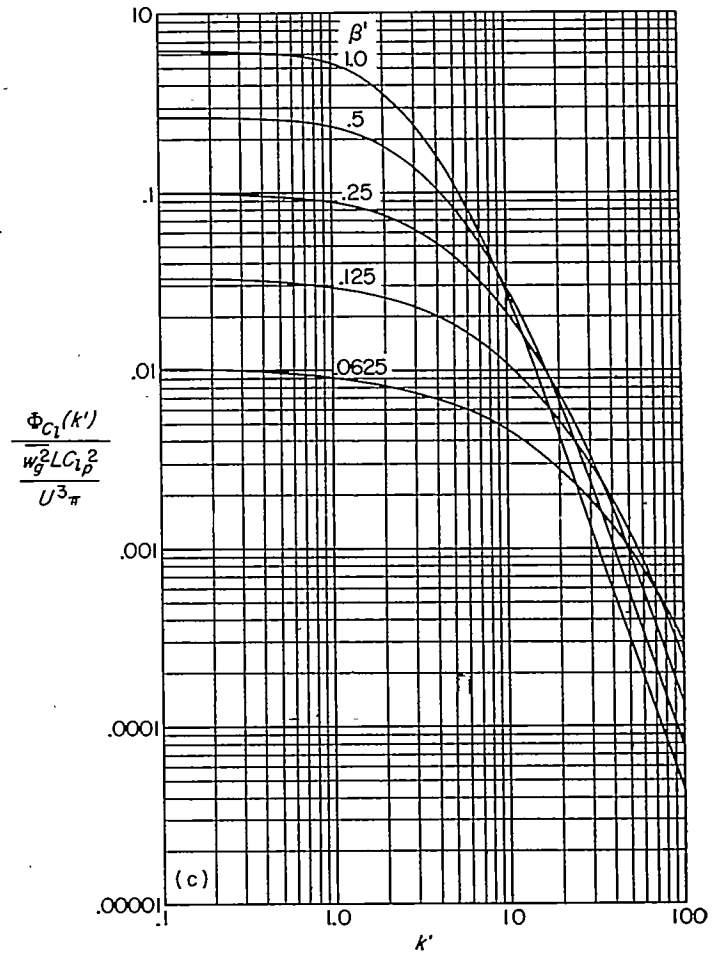

(c) Parabolic span loading.

FIGURE 7.—Continued.

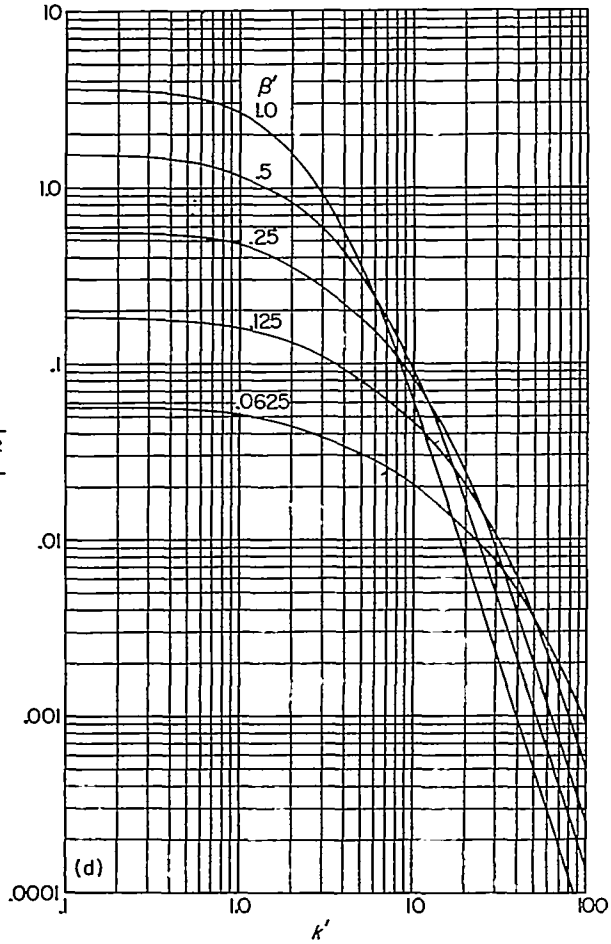

(d) Triangular span loading.

FIGURE 7.—Concluded.

The function given by equation (54) is plotted against k' in figure 8 for values of $\beta'\eta/2$. Values taken from this plot may be used in the numerical integration of the power spectra of the rolling-moment coefficient.

Power spectrum of rolling moment.—The power spectrum of the rolling moment due to the horizontal components of turbulence acting on the wing has been determined by using the expression for I_u obtained in the preceding section and the four distributions of the parameter $\Gamma(\eta)$ given in table II. The integral of equation (29) has been evaluated numerically for all four cases of load distribution, and the resulting variations of the power spectrum with frequency and β' are plotted in figure 9. In addition, the analytical solutions for the cases of rectangular and parabolic distributions are given here and their numerical values were checked against those obtained by the numerical-integration process. By use of equation (54), the solution for the rectangular case is found to be

$$\Phi_{C_l}(k')=\frac{3\overline{u_g^2}L\alpha_o^2C_{l_p}^2}{\pi U^3}\int_0^2(4-6\eta+\eta^3)\left[\frac{2\left(\frac{\beta'\eta}{2}\right)}{\sqrt{1+(k')^2}}K_1-\left(\frac{\beta'\eta}{2}\right)^2K_0\right]d\eta$$

$$=\frac{24\overline{u_g^2}L\alpha_o^2C_{l_p}^2}{\pi U^3a^4[1+(k')^2]}\left[a^3\int_0^a K_0(x)\,dx+a^2(3a^2+32)K_0(a)+16a(a^2+4)K_1(a)-64\right] \tag{55}$$

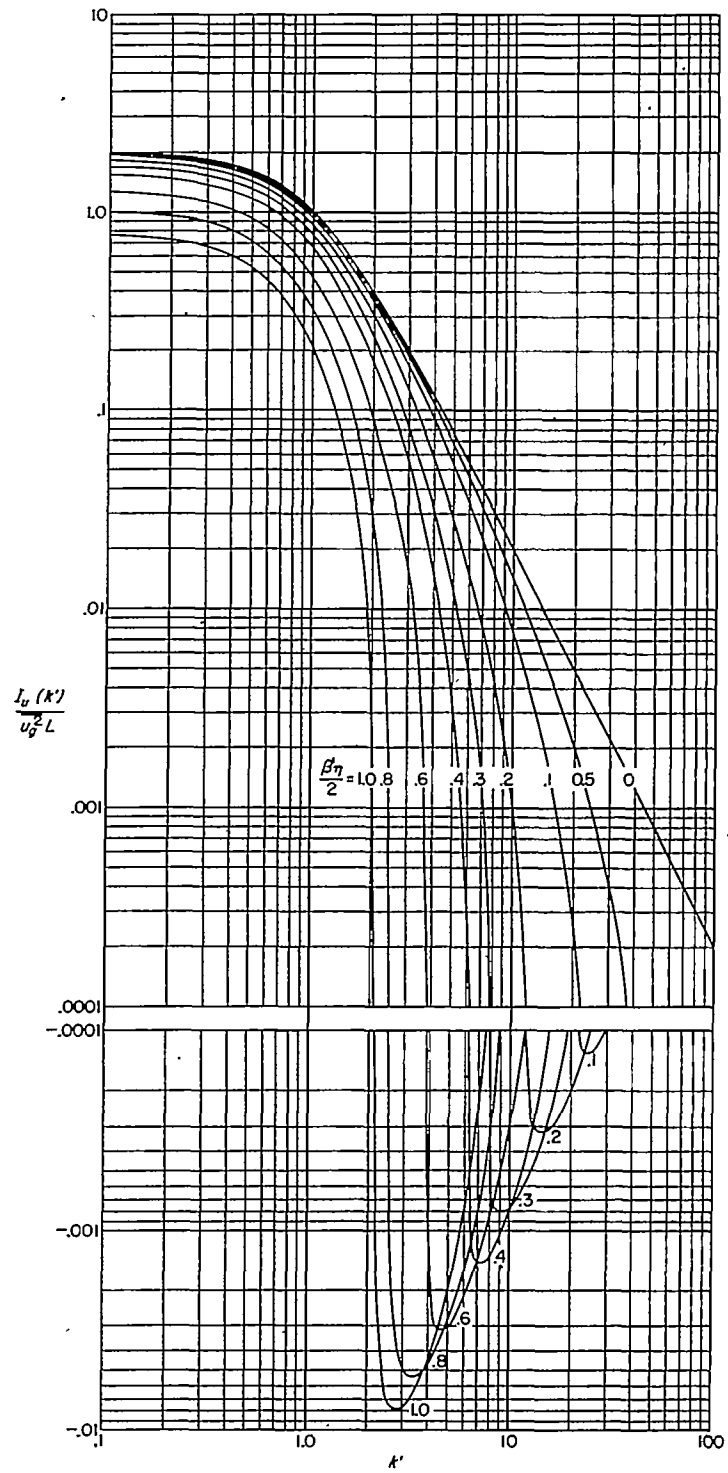

FIGURE 8.—Variation of horizontal-gust weighting parameter $\frac{I_u(k')}{\overline{u_g^2}L}$ for a range of values of $\beta'\eta/2$.

where $a=\beta'\sqrt{1+(k')^2}$ and $k'=\frac{\omega L}{U}$. The analytical solution for the parabolic distribution is given by

$$\Phi_{C_l}(k')=\frac{240\overline{u_g^2}L\alpha_o^2C_{l_p}^2}{7\pi U^3a^8[1+(k')^2]}[(209a^6+25{,}344a^4+331{,}776a^2)K_0(a)+(a^7+3{,}424a^5+133{,}632a^3+663{,}552a)K_1(a)+(a^7+63a^5)\int_0^a K_0(x)\,dx-1{,}120a^4+32{,}256a^2-663{,}552] \tag{56}$$

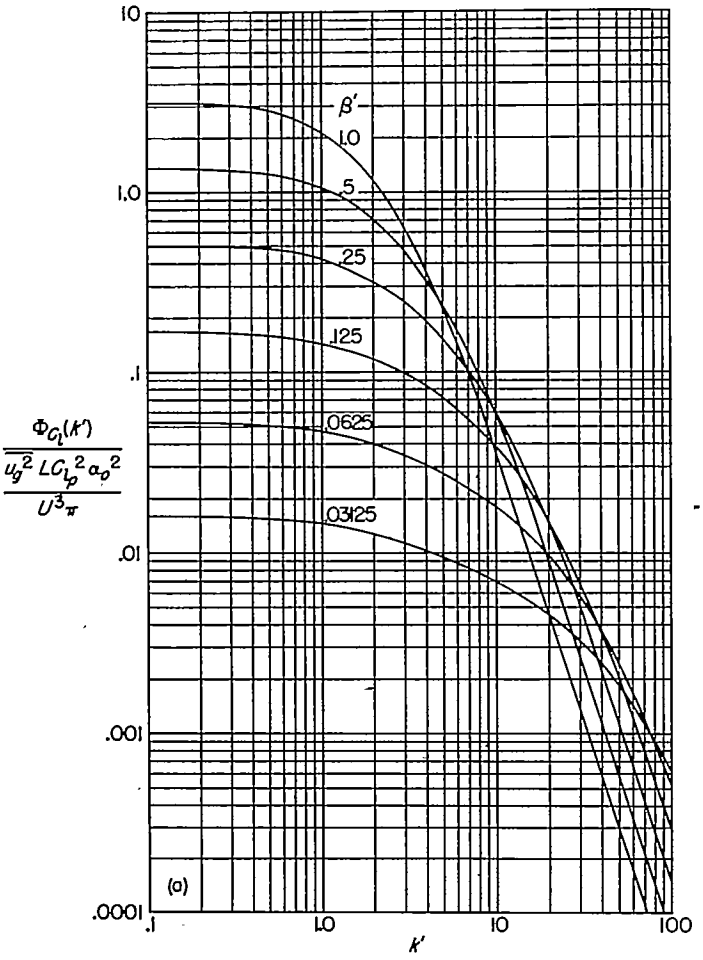

(a) Rectangular span loading.

FIGURE 9.—Power spectra of rolling moment due to horizontal gusts.

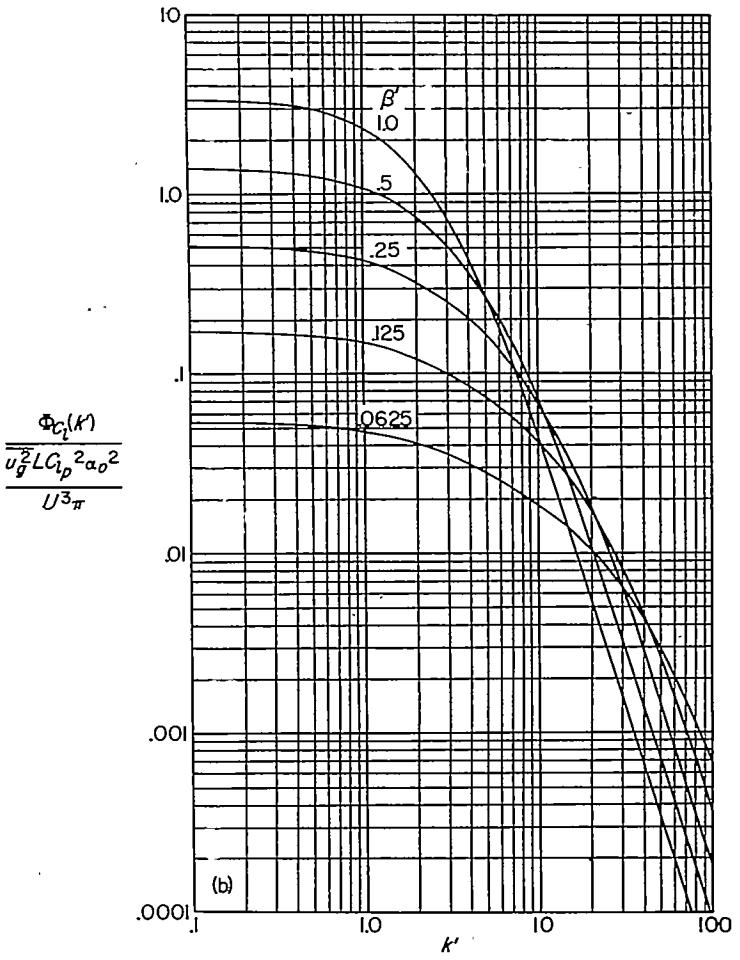

(b) Elliptic span loading.

FIGURE 9.—Continued.

A comparison of the values obtained for equations (55) and (56) and plots of the results obtained by the numerical-integration process indicated no difference, and none is shown in figure 9.

It is significant to observe that very little variation exists in the power spectra of figure 9 for the four span loadings considered. However, as compared with the rolling moment due to vertical gusts (fig. 7), the rolling moment due to horizontal gusts is relatively small for small values of trim angle of attack. Although no exact expression for the ratio of the power spectra of the rolling moments due to u_g and w_g may be given without including β' and γ, it may be seen from figures 7 and 9 that, in general,

$$\frac{\Phi_{C_l}|_{w_g}}{\Phi_{C_l}|_{u_g}} \approx \frac{0.2}{\alpha_o^2} \tag{57}$$

where α_o is given in radians.

CALCULATIONS FOR SIDE GUSTS

For the side gust considered, the correlation function of the rolling-moment coefficient as given by equation (32) becomes

$$\Psi_{C_l}(U\tau) = \frac{C_{l_\beta}^2 \overline{v_g^2}}{U^2}\left(1-\frac{|U\tau|}{2L}\right)e^{-\frac{|U\tau|}{L}} \tag{58}$$

and the variation of this function with $U\tau/L$ is, of course, equal to the variation of equation (41) with r, which is plotted in figure 4.

The power spectrum of the rolling-moment coefficient as given by equation (33) with $G(k')$ given by equation (43) becomes

$$\Phi_{C_l}(k') = \frac{C_{l_\beta}^2 \overline{v_g^2} L}{\pi U^3} \frac{1+3(k')^2}{[1+(k')^2]^2} \tag{59}$$

The variation of the spectrum with frequency $k' = \frac{\omega L}{U}$ is shown as the $G(k')$ curve of figure 5.

DISCUSSION

The purpose of this section is to discuss the implications of the assumptions made in the analysis of this report, the reasons for making these assumptions, and the application of the results.

ASSUMPTIONS CONCERNING THE NATURE OF TURBULENCE

The turbulence was assumed to be homogeneous in order to make the problem stationary in the statistical sense and thus permit the use of the mathematical techniques developed for such problems. In a practical sense, turbulence can be homogeneous only in a limited body of air. The assumption thus implies that the dimension of this body of air along the flight path is large compared with the distance traversed

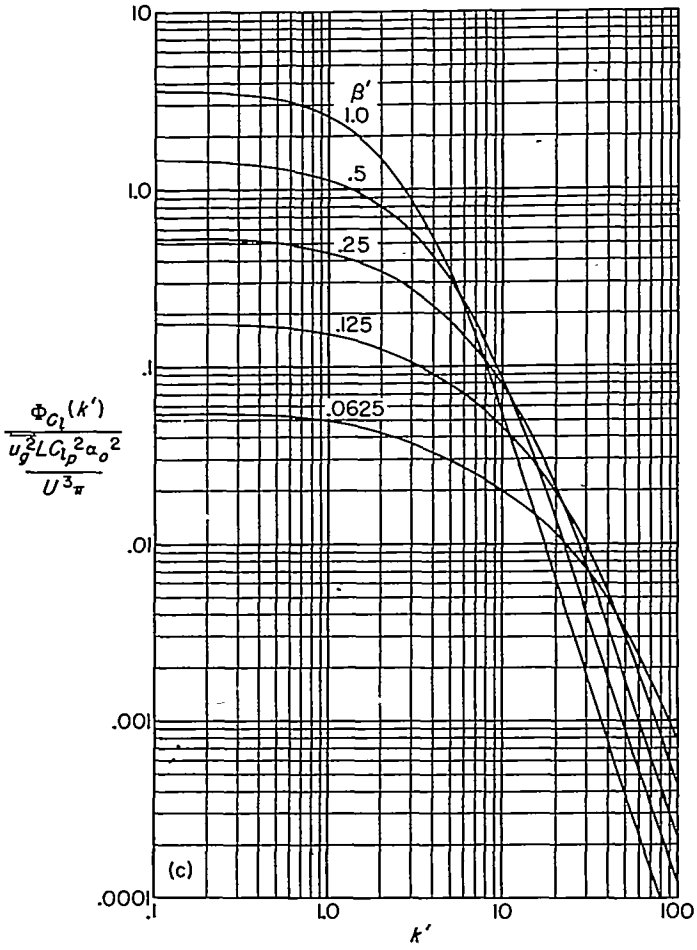

(c) Parabolic span loading.

FIGURE 9.—Continued.

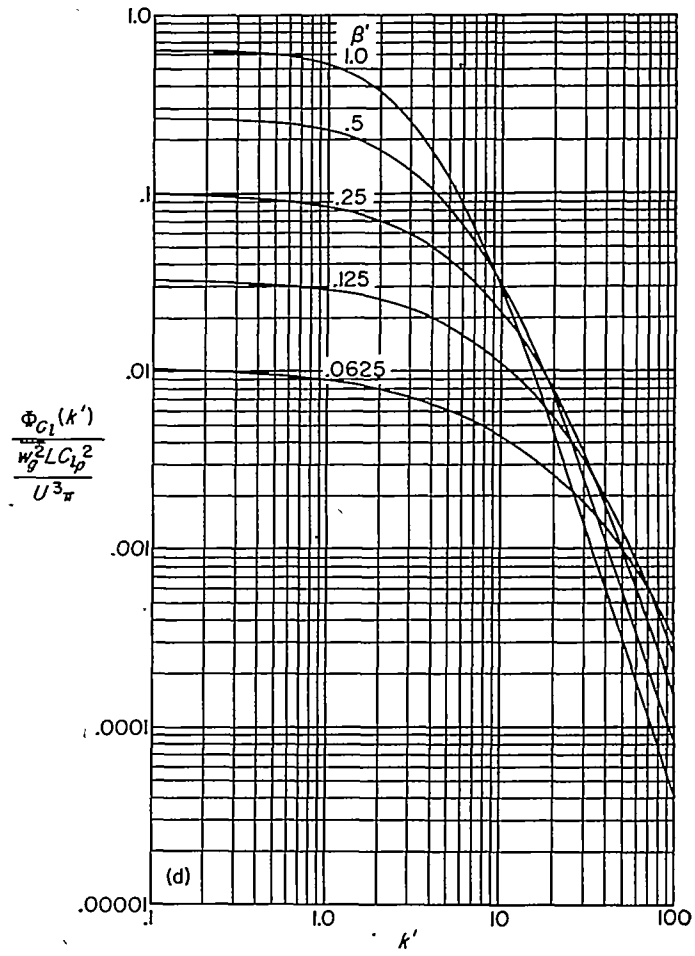

(d) Triangular span loading.

FIGURE 9.—Concluded.

in the reaction time of the airplane. In the case of loads studies this reaction time is of the order of the time to damp to one-half amplitude, but, in the case of motion studies, the reaction time may be much larger. Obviously, the greater the body of air, the greater the reliability with which the loads and motions can be predicted (in a statistical sense) for one run through it. In general, turbulence at very low altitudes, which may be influenced significantly by the configuration of the ground, and the turbulence in thunderstorms may not be sufficiently homogeneous for this type of analysis, but other types of turbulence are likely to be substantially homogeneous over sufficiently large distances.

Isotropy was assumed in order to permit the required two-dimensional correlation functions to be expressed simply in terms of the one-dimensional correlation functions. For sufficiently short wavelengths all turbulence is isotropic (see ref. 7), but for long wavelengths it can be isotropic only if it is homogeneous (both in the plane of the flight path and perpendicular to it). (The condition of axisymmetry is less restrictive inasmuch as it does not specify the variation of the characteristics of the turbulence in the vertical direction.) In practical problems, if the turbulence may be assumed to be homogeneous, the conditions of isotropy are likely to be satisfied sufficiently to permit the use of the approach presented herein for all but very long wavelengths. The wavelength at which this approach ceases to be valid depends on the size of the body of air under consideration, being longer for a large body.

Taylor's hypothesis implies that the variation in gust intensity that prevails along the flight path at any instant will remain substantially the same until the airplane has traversed the given body of air. The required correlation functions for atmospheric turbulence are thus in the nature of space correlation functions (rather than time correlation functions) and have been considered as such. The statistical characteristics of the turbulence are then independent of the speed at which it is traversed. Clearly, the validity of this hypothesis depends on the flying speed of the airplane and it would be expected that, at very low speeds, the hypothesis of Taylor becomes less valid and the results may be less accurate. On the basis of present knowledge, no definite lower limiting speed can be quoted. The effect of finite flying speed on the gust correlation function can be expected to be most pronounced for large distances, where the correlation is weak. Thus, the effect on the various spectra is likely to be small and to occur at the longest wavelengths, where, as previously mentioned, the spectra are somewhat uncertain for other reasons as well.

For practical purposes, the parameter L (the integral scale of turbulence) used herein is a largely fictitious quantity, inasmuch as it is, to a large extent, proportional to the values of the gust spectra for infinite wavelengths. In view of the

uncertainties in the values of the spectra at long wavelengths and the fact that the spectra in this region predominantly define the area under the integral, the parameter L has little physical significance. Therefore, at present, insufficient information is available to give an exact value for L to be used in connection with the numerical results calculated herein. However, on the basis of the measurements such as those of reference 13, a value of 1,000 to 2,000 feet appears to be appropriate for the conditions of the referenced tests. It is desirable to obtain more information concerning the spectra of atmospheric turbulence under a wider range of conditions. More definite values could then be deduced by fitting measured results by means of an analytical expression of the type used here. This expression could be used as a means of obtaining a value of L by extrapolation of the measured results to infinite wavelengths (zero frequency).

ASSUMPTIONS CONCERNING THE AERODYNAMIC FORCES

The fundamental assumption concerning the aerodynamic forces is that they vary linearly with gust intensity. This assumption implies that the ratio of the gust speed to the flying speed must always be fairly small; if the aerodynamic forces and moments tend to vary with gust intensity in a nonlinear manner, as the wing yawing moments do for all angles of attack and the other forces and moments do for high angles of attack, the ratio of gust intensity to flying speed must be very small—about 1/30 or less. However, as previously mentioned, the wing yawing moments due to gusts are likely to be quite small, so that some error in them due to slight deviations from linearity is not likely to affect appreciably the results of an analysis of the lateral motion. Hence, for an airplane flying at small angles of attack and at speeds of about 200 knots or more, in continuous turbulence, the assumption of linearity should be valid; for flight in severe thunderstorms, it is not likely to be valid, and, for flight at high angles of attack, it is likely to be valid only for light turbulence.

The rigidity of the wing, which was mentioned in the list of assumptions, enters only indirectly into the problem considered herein. The results obtained here are valid whether the wing is rigid or not. However, in the case of flexible wings (the term "flexible" being used to describe wings with deformations which give rise to appreciable aerodynamic forces), certain additional information is required. (See ref. 6.) This information may take the form of span influence functions $\gamma(y)$ modified by static aeroelastic effects, or may require certain cross-correlation functions or cross spectra between the gust forces and the dynamic forces, depending on the individual case.

The assumption that the indicial-response influence function $h(t,y)$ can be written as a product of functions of time only and distance along the span only is based on the reasoning of reference 6. This reasoning, in turn, is based on the observation that, according to the available information for the lift distributions due to sinusoidal motions (and, hence, those due to indicial motion), the lift distribution tends to be substantially invariant with frequency (or time) except for an overall factor. Inasmuch as this information is confined to unswept wings, this assumption may not be valid for swept wings.

APPLICATION OF THE RESULTS

In this report the rolling moments and yawing moments have been calculated for a wing due to the u, v, and w components of turbulence. If the turbulence is isotropic, these components are statistically independent at a point. In any practical application, all three components are always present and the wing rolling and yawing moments due to the combined action of the three components must be known. In isotropic turbulence, the cross correlations between u and w and between v and w in the horizontal plane are zero, although u and v have a nonvanishing cross correlation. Thus, the moments due to v and w can be added directly, but, if horizontal-gust effects are to be taken into account, not only the moments due to u calculated herein but also the moments which arise from the cross correlation between u and v should be added to the others. However, there is reason to believe that the horizontal-gust effects on the lateral moments are generally very small, so that neglect of this cross-correlation effect is usually justified.

The rolling and yawing moments due to u_g and w_g considered herein are only those contributed by the wing but, inasmuch as the lateral moments contributed by the fuselage and tail as a consequence of these two components of gusts are generally very small, the results given here may, in general, be used to represent the lateral moments on a complete airplane due to these two gust components.

Similarly, the rolling and yawing moments of a complete airplane due to the v-component of gusts depend not only on the wing contribution considered here but also on the contribution of the vertical tail, which can be calculated in a straightforward manner. For instance, a method of calculating the yawing moments and side force on a fuselage and vertical fin due to side gusts is found in reference 16.

Although the contribution of the horizontal component of gusts to the lateral moments appears to be small compared with the other two components, it should be kept in mind that the effect of this component increases as the square of the trim angle of attack. (See eq. (57).) For conventional airplanes in the landing configuration and for vertically rising airplanes in the transitional stage, the effects of horizontal gusts may well be predominant in calculations of the forces, moments, and motions due to turbulence.

CONCLUDING REMARKS

The correlation functions and power spectra of the rolling and yawing moments on an airplane wing due to the three components of continuous random turbulence have been calculated. The rolling moments due to the longitudinal (horizontal) and normal (vertical) components depend on the spanwise distributions of instantaneous gust intensity, which were taken into account by using the inherent properties of symmetry of isotropic turbulence. The results consist of expressions for the correlation functions and spectra of the rolling moment in terms of the point correlation functions of the two components of turbulence.

Specific numerical calculations were made for a pair of correlation functions given by simple analytic expressions, which fit available experimental data very well. Calculations were made for four lift distributions and the differences in the results calculated for these distributions were small. By comparison with the results calculated herein, the results of previous analyses for which it was assumed that random turbulence along the flight path and variations of turbulence across the span were linear have been shown to be valid only when the ratio of the span to the integral scale of turbulence (about 1,000 to 2,000 feet) is small.

A comparison of the power spectra of the rolling moments due to horizontal gusts and those due to vertical gusts showed that the vertical gusts were predominant at small values of trim angle of attack (or trim lift coefficient); however, the relative effect due to horizontal gusts increased as a function of the square of the trim angle of attack.

The rolling moment due to lateral (side) gusts, which is small, was expressed in terms of the instantaneous value of the gust at representative points on the wing, so that the effect of spanwise variation in gust intensity was ignored. The yawing moments were considered to be proportional to the rolling moments, the constants of proportionality being given by simple aerodynamic relations.

LANGLEY AERONAUTICAL LABORATORY,
NATIONAL ADVISORY COMMITTEE FOR AERONAUTICS,
LANGLEY FIELD, VA., *September 6, 1956.*

APPENDIX

EVALUATION OF THE ELLIPTIC INTEGRAL WEIGHTING FUNCTION

The evaluation of the integral weighting function $\Gamma(\eta)$ involves the integral given by equation (21):

$$\Gamma(\eta)=\int_{-1}^{1-\eta}\gamma(y_1^*)\gamma(y_1^*+\eta)\,dy_1^*$$

For the case of the elliptic distribution of the additional span loading factor,

$$\gamma(y^*)=\frac{32}{\pi}y^*\sqrt{1-y^{*2}}$$

and the integral weighting function to be evaluated becomes

$$\Gamma(\eta)=\left(\frac{32}{\pi}\right)^2\int_{-1}^{1-\eta}(y_1^*)(y_1^*+\eta)\sqrt{1-y_1^{*2}}\sqrt{1-(y_1^*+\eta)^2}\,dy_1^*$$

Under the substitution

$$x=\frac{2y_1^*+\eta}{2-\eta}=\frac{2y_1^*+\eta}{\delta}$$

the integral may be written as

$$\Gamma(\eta)=\left(\frac{32}{\pi}\right)^2\left(\frac{2-\eta}{8}\right)\int_{-1}^{1}(\delta x-\eta)(\delta x+\eta)\sqrt{1-\frac{1}{4}(\delta x-\eta)^2}\sqrt{1-\frac{1}{4}(\delta x+\eta)^2}\,dx$$

Inasmuch as $1-z^2=(1-z)(1+z)$,

$$\begin{aligned}\Gamma(\eta)&=\left(\frac{32}{\pi}\right)^2\left(\frac{2-\eta}{8}\right)\int_{-1}^{1}(\delta^2x^2-\eta^2)\sqrt{\left(1-\frac{1}{2}\delta x+\frac{1}{2}\eta\right)\left(1+\frac{1}{2}\delta x-\frac{1}{2}\eta\right)}\sqrt{\left(1-\frac{1}{2}\delta x-\frac{1}{2}\eta\right)\left(1+\frac{1}{2}\delta x+\frac{1}{2}\eta\right)}\,dx\\
&=\left(\frac{32}{\pi}\right)^2\left(\frac{2-\eta}{8}\right)\int_{-1}^{1}(\delta^2x^2-\eta^2)\sqrt{\left[\left(1+\frac{1}{2}\eta\right)-\frac{1}{2}\delta x\right]\left[\left(1-\frac{1}{2}\eta\right)+\frac{1}{2}\delta x\right]}\sqrt{\left[\left(1-\frac{1}{2}\eta\right)-\frac{1}{2}\delta x\right]\left[\left(1+\frac{1}{2}\eta\right)+\frac{1}{2}\delta x\right]}\,dx\\
&=\left(\frac{32}{\pi}\right)^2\left(\frac{2-\eta}{8}\right)\int_{-1}^{1}(\delta^2x^2-\eta^2)\left(1+\frac{1}{2}\eta\right)\left(1-\frac{1}{2}\eta\right)\sqrt{\left(1-\frac{\delta x}{2+\eta}\right)\left(1+\frac{\delta x}{2-\eta}\right)\left(1-\frac{\delta x}{2-\eta}\right)\left(1+\frac{\delta x}{2+\eta}\right)}\,dx\end{aligned}$$

With the notation $k=\frac{\delta}{2+\eta}=\frac{2-\eta}{2+\eta}$,

$$\begin{aligned}\Gamma(\eta)&=\frac{32}{\pi^2}(2-\eta)^2(2+\eta)\int_{-1}^{1}[(2-\eta)^2x^2-\eta^2]\sqrt{(1-kx)(1+x)(1-x)(1+kx)}\,dx\\
&=\frac{64}{\pi^2}(2-\eta)^2(2+\eta)\int_{0}^{1}[(2-\eta)^2x^2-\eta^2]\sqrt{(1-k^2x^2)(1-x^2)}\,dx\end{aligned}$$

where the integrand may be seen to be an even function of the variable x. Multiplying numerator and denominator by the radical and expanding yields

$$\Gamma(\eta)=\frac{64}{\pi^2}(2-\eta)^2(2+\eta)\left\{k^2(2-\eta)^2\int_0^1\frac{x^6dx}{\sqrt{(1-k^2x^2)(1-x^2)}}-k^2[(2+\eta)^2+(2-\eta)^2+\eta^2]\int_0^1\frac{x^4dx}{\sqrt{(1-k^2x^2)(1-x^2)}}+\right.$$
$$\left.[(2-\eta)^2+\eta^2+\eta^2k^2]\int_0^1\frac{x^2dx}{\sqrt{(1-k^2x^2)(1-x^2)}}-\eta^2\int_0^1\frac{dx}{\sqrt{(1-k^2x^2)(1-x^2)}}\right\}$$

The integrals may be recognized as elliptic integrals in powers of x^{2n} for which the closed-form solutions may be found in reference 17, for example. In terms of the standard elliptic integrals (in Jacobi's notation) of modulus $k=\frac{2-\eta}{2+\eta}$,

$$K(k)=\int_0^1\frac{dx}{\sqrt{(1-x^2)(1-k^2x^2)}}$$

is defined as a complete elliptic integral of the first kind, and

$$E(k)=\int_0^1\sqrt{\frac{1-k^2x^2}{1-x^2}}\,dx$$

is defined as a complete elliptic integral of the second kind. Tables of these integrals may be found in most mathematical handbooks as well as in reference 17. In terms of these integrals, the solution for the integral weighting function is found to be

$$\Gamma(\eta)=\frac{64}{\pi^2}(2-\eta)^2(2+\eta)\left\{\frac{k^2(2-\eta)^2}{15k^6}[(8+3k^2+4k^4)K(k)-(8+7k^2+8k^4)E(k)]-\right.$$
$$\frac{k^2[(2+\eta)^2+(2-\eta)^2+\eta^2]}{3k^4}[(2+k^2)K(k)-2(1+k^2)E(k)]+$$
$$\left.\frac{[(2-\eta)^2+\eta^2+\eta^2k^2]}{k^2}[K(k)-E(k)]-\eta^2K(k)\right\}$$
$$=\frac{512}{15\pi^2}(2+\eta)[4\eta(\eta^3-3\eta-1)K(k)+(4+9\eta^2-\eta^4)E(k)]$$

REFERENCES

1. Wax, Nelson, ed.: Selected Papers on Noise and Stochastic Processes. Dover Publications, Inc., c. 1954.
2. Clementson, Gerhardt C.: An Investigation of the Power Spectral Density of Atmospheric Turbulence. Ph. D. Thesis, M.I.T., 1950.
3. Press, Harry, and Mazelsky, Bernard: A Study of the Application of Power-Spectral Methods of Generalized Harmonic Analysis to Gust Loads on Airplanes. NACA Rep. 1172, 1954. (Supersedes NACA TN 2853.)
4. Decaulne, Paul: Airplane Lateral Response to Statistical Gust Inputs. M. S. Thesis, M.I.T., 1952.
5. Summers, Robert A.: A Statistical Description of Large-Scale Atmospheric Turbulence. Sc. D. Thesis, M.I.T., 1954. (Also Rep. T-55, Instrumentation Lab., M.I.T., May 17, 1954.)
6. Diederich, Franklin Wolfgang: The Response of an Airplane to Random Atmospheric Disturbances. Ph. D. Thesis, C.I.T., 1954. (Also available as NACA TN 3910.)
7. Batchelor, G. K.: The Theory of Homogeneous Turbulence. Cambridge Univ. Press, 1953.
8. Von Kármán, Theodor, and Howarth, Leslie: On the Statistical Theory of Isotropic Turbulence. Proc. Roy. Soc. (London), ser. A, vol. 164, no. 917, Jan. 21, 1938, pp. 192–215.
9. Dryden, Hugh L.: Turbulence Investigations at the National Bureau of Standards. Proc. Fifth Int. Cong. Appl. Mech. (Cambridge, Mass., 1938), John Wiley & Sons, Inc., 1939, pp. 362–368.
10. Sears, William R.: Some Aspects of Non-Stationary Airfoil Theory and Its Practical Application. Jour. Aero. Sci., vol. 8, no. 3, Jan. 1941, pp. 104–108.
11. Heaslet, Max. A., and Spreiter, John R.: Reciprocity Relations in Aerodynamics. NACA Rep. 1119, 1953. (Supersedes NACA TN 2700.)
12. Liepmann, H. W.: On the Application of Statistical Concepts to the Buffeting Problem. Jour. Aero. Sci., vol. 19, no. 12, Dec. 1952, pp. 793–800, 822.
13. Crane, Harold L., and Chilton, Robert G.: Measurements of Atmospheric Turbulence Over a Wide Range of Wavelength for One Meteorological Condition. NACA TN 3702, 1956.
14. Müller, Reinhard: Über die zahlenmässige Beherrschung und Anwendung einiger den Besselschen verwandten Funktionen nebst Bemerkungen zum Gebiet der Besselfunktionen. Z.a.M.M., Bd. 19, Heft 1, Feb. 1939, pp. 36–54.
15. Fletcher, A., Miller, J. C. P., and Rosenhead, L.: An Index of Mathematical Tables. McGraw-Hill Book Co., Inc., 1946.
16. Eggleston, John M.: Calculation of the Forces and Moments on a Slender Fuselage and Vertical Fin Penetrating Lateral Gusts. NACA TN 3805, 1956.
17. Byrd, Paul F., and Friedman, Morris D.: Handbook of Elliptic Integrals for Engineers and Physicists. Lange, Maxwell & Springer, Ltd. (New York), 1954.