NACA RM A57F03

3 1176 00114 7751

C.1

NACA

RESEARCH MEMORANDUM

PRELIMINARY INVESTIGATION OF THE CHARACTERISTICS OF A TWO-DIMENSIONAL WING AND PROPELLER WITH THE PROPELLER PLANE OF ROTATION IN THE WING-CHORD PLANE

By David H. Hickey

Ames Aeronautical Laboratory
Moffett Field, Calif.

LIBRARY COPY

AUG 7 1957

LANGLEY AERONAUTICAL LABORATORY
LIBRARY NACA
LANGLEY FIELD, VIRGINIA

NATIONAL ADVISORY COMMITTEE
FOR AERONAUTICS

WASHINGTON
August 1, 1957

NATIONAL ADVISORY COMMITTEE FOR AERONAUTICS

RESEARCH MEMORANDUM

PRELIMINARY INVESTIGATION OF THE CHARACTERISTICS OF A TWO-DIMENSIONAL WING AND PROPELLER WITH THE PROPELLER PLANE OF ROTATION IN THE WING-CHORD PLANE

By David H. Hickey

SUMMARY

The aerodynamic characteristics of a wing-propeller combination with the propeller rotating in the wing-chord plane of a two-dimensional wing were investigated. The wing had a 4-1/2-foot chord length. Total static lift was measured with and without the wing for a 3-foot-diameter propeller; the effects of a ground plane on the static lift of the wing-propeller combination were measured with a 2-foot-diameter propeller. Lift and pressure distributions at several angles of attack and free-stream airspeeds from 0 to 93 feet per second were obtained with the 3-foot-diameter wing-propeller combination.

Model simplicity and the question of valid wind-tunnel blockage corrections limit the test results to a qualitative evaluation. It was found that static lift was reduced when a ground plane was within two propeller diameters of the wing. Propeller operation in the wing induced large negative pressures on the wing leading edge at low forward speeds. The minimum pressures on the leading edge at maximum lift were significantly lower with the propeller and wing combination than with the plain wing. Propeller operation with wind on was limited by propeller blade breakage, thus indicating that propeller stresses for this type of operation may be prohibitive.

INTRODUCTION

The scheme of producing lift at zero or low forward speeds by means of a direct lifting propeller rotating in the wing-chord plane has been proposed for VTOL or STOL aircraft by several designers. Proposals have been made for the propellers to contribute the major part of the lift, and/or pitch, roll, and yaw control. No known data are available for a configuration of this type; therefore, a preliminary investigation was conducted in the Ames 7- by 10-foot wind tunnel. This report contains the results of this investigation.

NOTATION

c wing chord, in.

C_L lift coefficient, $\frac{\text{lift}}{qS}$

C_T thrust coefficient, $\frac{T}{\rho n^2 D^4}$

D diameter, ft

n rotational speed, rps

P pressure coefficient, $\frac{p_l - p}{q}$

p_l local static pressure, lb/sq ft

p free-stream static pressure, lb/sq ft

q free-stream dynamic pressure, lb/sq ft

S wing area, sq ft

T thrust, lb

x distance from the airfoil leading edge, measured parallel to the chord line, in.

z distance from the airfoil to the ground measured normal to the surface, ft

α angle of attack, deg

β propeller blade angle at 0.75 radius, deg

ρ mass density of air, slugs/cu ft

MODEL AND APPARATUS

In view of the total lack of knowledge about the characteristics of the proposed arrangement it was decided to build a simple type of model and look for trends and unexpected problems rather than to build a complex model and obtain detailed data. The wing chosen was a "through" span model having a 10.5-percent-thick airfoil section and a 4-1/2-foot chord. (Model ordinates are listed in ref. 1.) A 36-1/4-inch-diameter hole was cut in the wing with its center on the 50-percent chord station

of the midspan chord; a filler block was provided to reduce the opening to 24-1/4 inches. For simplicity, the motor driving the propeller was mounted externally with its drive shaft coincident with the axis of the opening in the wing. Both the wing and the motor with its supports were attached to the scale system so that total forces were recorded. Two propellers were tested, a 3-foot-diameter, six-bladed propeller and a 2-foot-diameter, three-bladed propeller. No special effort was made to design entrance and exit shapes for the propeller aperture. Pressure distributions were obtained at three spanwise stations, 1 foot from each tunnel wall and at the model center line fore and aft of the aperture. Sketches of the model setup are shown in figure 1.

TESTS AND METHODS

Static force data were obtained for the 3-foot-diameter propeller without the wing for a range of β from 5° to 20°, and with the wing for $\beta = 10^{\circ}$. Static force data for the 2-foot-diameter propeller were obtained with the wing-propeller combination only; data were obtained through a β range from 10° to 45° and for a range of ground-plane distances for $\beta = 35^{\circ}$.

Limited force and pressure data for the 3-foot-diameter propeller and wing combination were obtained at free-stream airspeeds as high as 93 feet per second, and several angles of attack.

These results are presented without wind-tunnel wall or blockage corrections. It is believed that the correction due to blockage of the test section by the propeller slipstream would be large; however, the magnitude of this correction is unknown.

RESULTS AND DISCUSSION

Although the model and test setup were crude and the magnitude of the wind-tunnel corrections is unknown, it is believed the test data reveal some general trends.

Static Tests

The static thrust coefficients developed by the two propellers are shown in figure 2. The values for the isolated 3-foot propeller are shown through a range of blade angles and the value at 10° blade angle with the propeller and wing combination. The values for the 2-foot propeller are shown through a range of blade angles for the wing-propeller combination. The shroud effect of the wing produces a linear variation of C_T with β to $\beta = 40^{\circ}$ for the 2-foot-diameter propeller and wing

combination. A result of considerable importance is shown in figure 3 where the effect on C_T of distance above the ground is shown. As the distance of the chord plane from the ground becomes less than about 2 diameters, the value of C_T begins to decrease; at about 1 diameter, it apparently begins to decrease very rapidly, since at about 0.4 diameter it has become negative. Pressure distributions showed that this loss in thrust resulted from low pressures on the lower surface of the wing generated by the slipstream flowing between the wing and ground.

Forward Speed Tests

The results of tests made at forward speeds are shown in figure 4. Shown are lift curves for the propeller not turning with the aperture both open and closed, and with the propeller turning at approximately 5000 rpm for two free-stream velocities. First, it should be noted that with the aperture closed, the wing lift-curve slope is close to the theoretical value and the motor and support below the wing cause a 3° shift in the angle for zero lift.

The second important point is that at either q, the propeller produced a lift larger than that measured for the same propeller rpm at static conditions. Although some of this increase may be the direct effect of forward speed on a propeller inclined at 90° to the free stream, figure 5 shows that a portion of this increased lift was induced on the wing. Because of the blockage correction question, induced lift magnitude cannot be absolutely stated; however, the pressure distributions shown in figure 5 indicate that the induced lift can be significant.

The pressure distributions indicate that the induced lift was due to induced angle-of-attack changes. Variation of peak pressure coefficient with angle of attack is shown in figure 6 for the present data and for the plain-wing data of reference 1. More negative pressure peaks were attained by the propeller and wing combination without leading-edge separation, although separation from the wing leading edge occurred at maximum lift.

Propeller Loads

The data for the two configurations are incomplete because of propeller blade breakage. After 1 hour of running time at forward speed, one of the 3-foot-diameter propeller blades failed as a result of fatigue at the threaded root of the blade. Research was resumed with a cut-down 2-foot-diameter, three-bladed propeller. These blades had not been previously used. After about 1/2 hour of running time, at forward speed, the blade roots were die-checked and showed cracks forming in the threaded root. It appears that the propeller for a lift device of this

type must have either (1) an abnormally strong root section, (2) flapping hinges, or (3) vanes to control the propeller inflow angle.

CONCLUSIONS

1. At zero forward speed the thrust of a wing-propeller arrangement of this type is reduced or may even become negative as the ground is approached.

2. Under forward speed conditions, the propeller operation induces large negative pressure peaks on the wing leading edge but also acts to delay air-flow separation.

3. Operation of a propeller in the wing-chord plane of a wing may cause prohibitive propeller blade bending stresses.

Ames Aeronautical Laboratory
National Advisory Committee for Aeronautics
Moffett Field, Calif., June 3, 1957

REFERENCE

1. Dannenberg, Robert E., and Weiberg, James A.: Section Characteristics of a 10.5-Percent-Thick Airfoil With Area Suction as Affected by Chordwise Distribution of Permeability. NACA TN 2847, 1952.

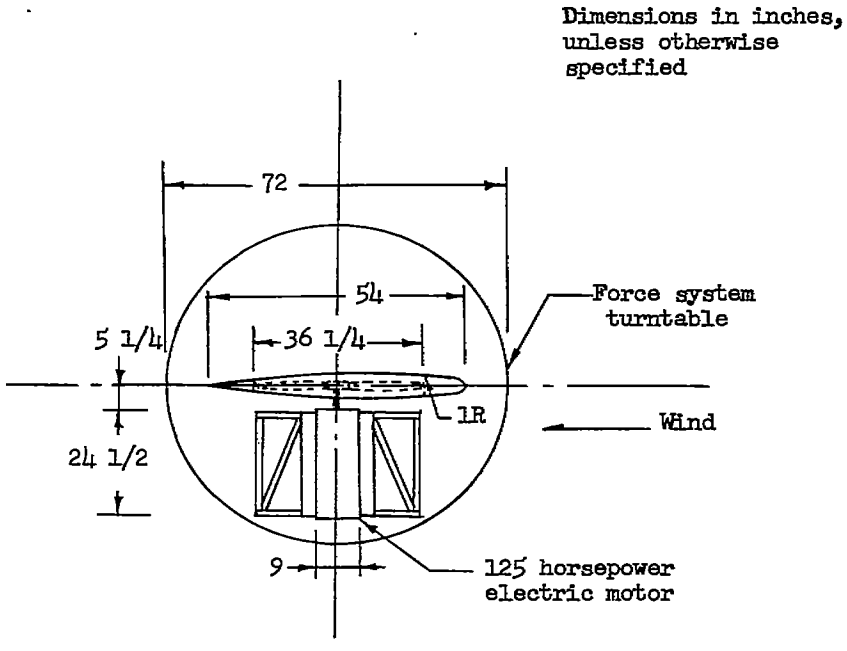

(a) End view.

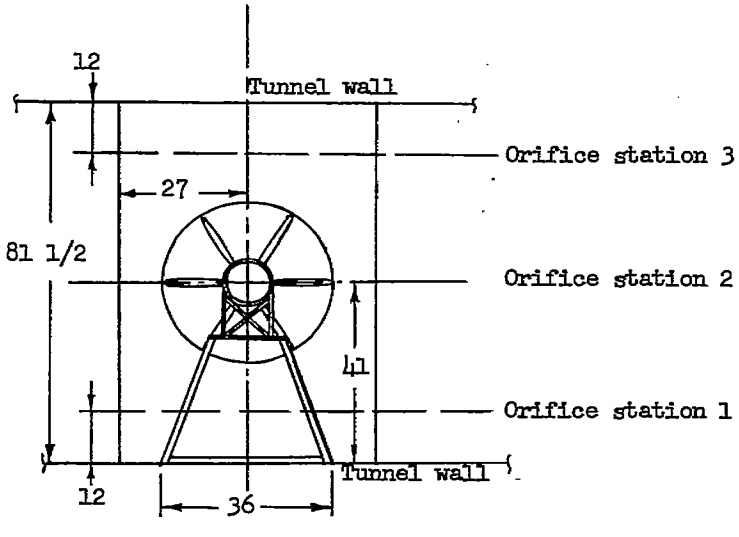

(b) Bottom view.

Figure 1.- Test setup in the 7- by 10-foot wind tunnel.

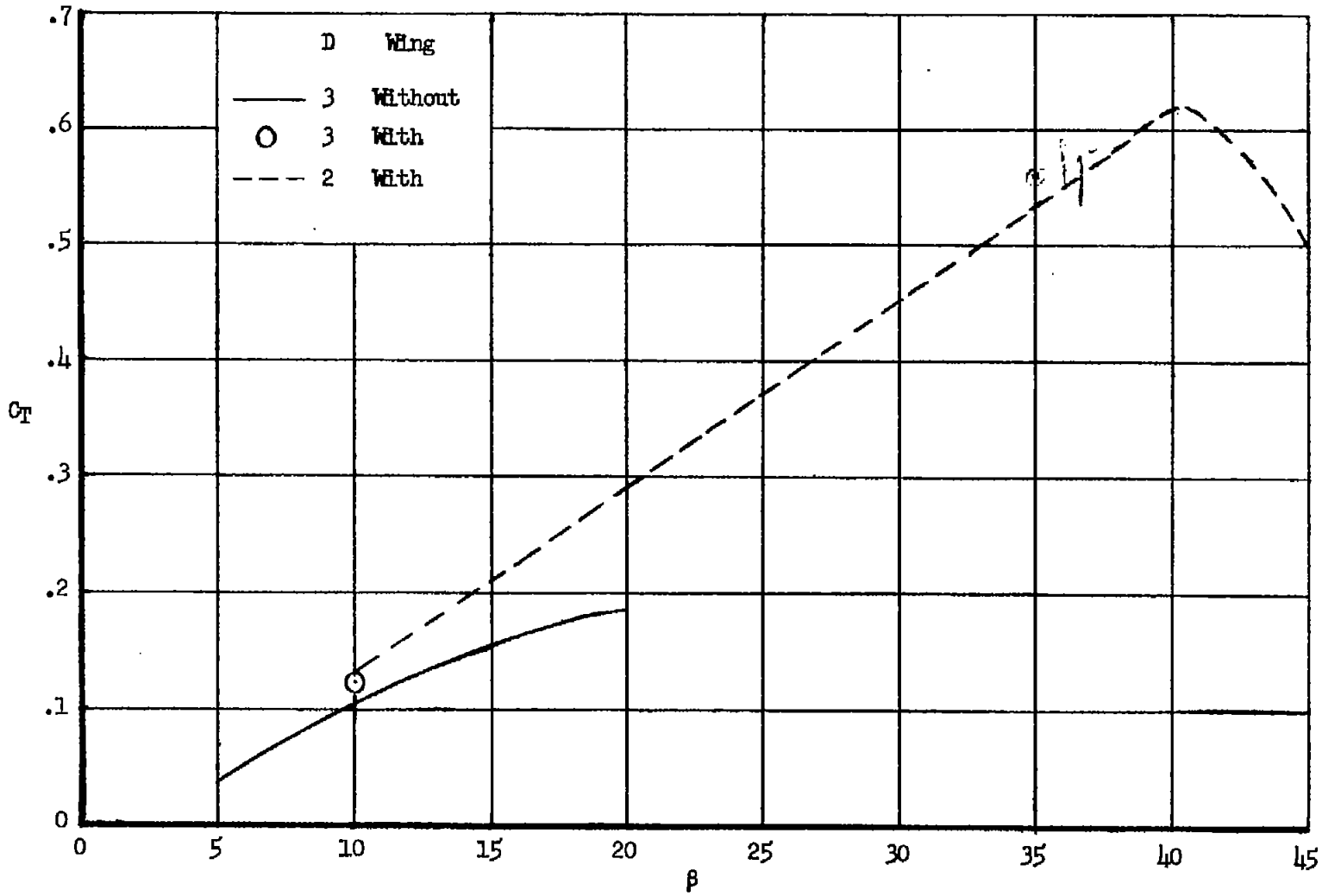

Figure 2.- Static thrust coefficients.

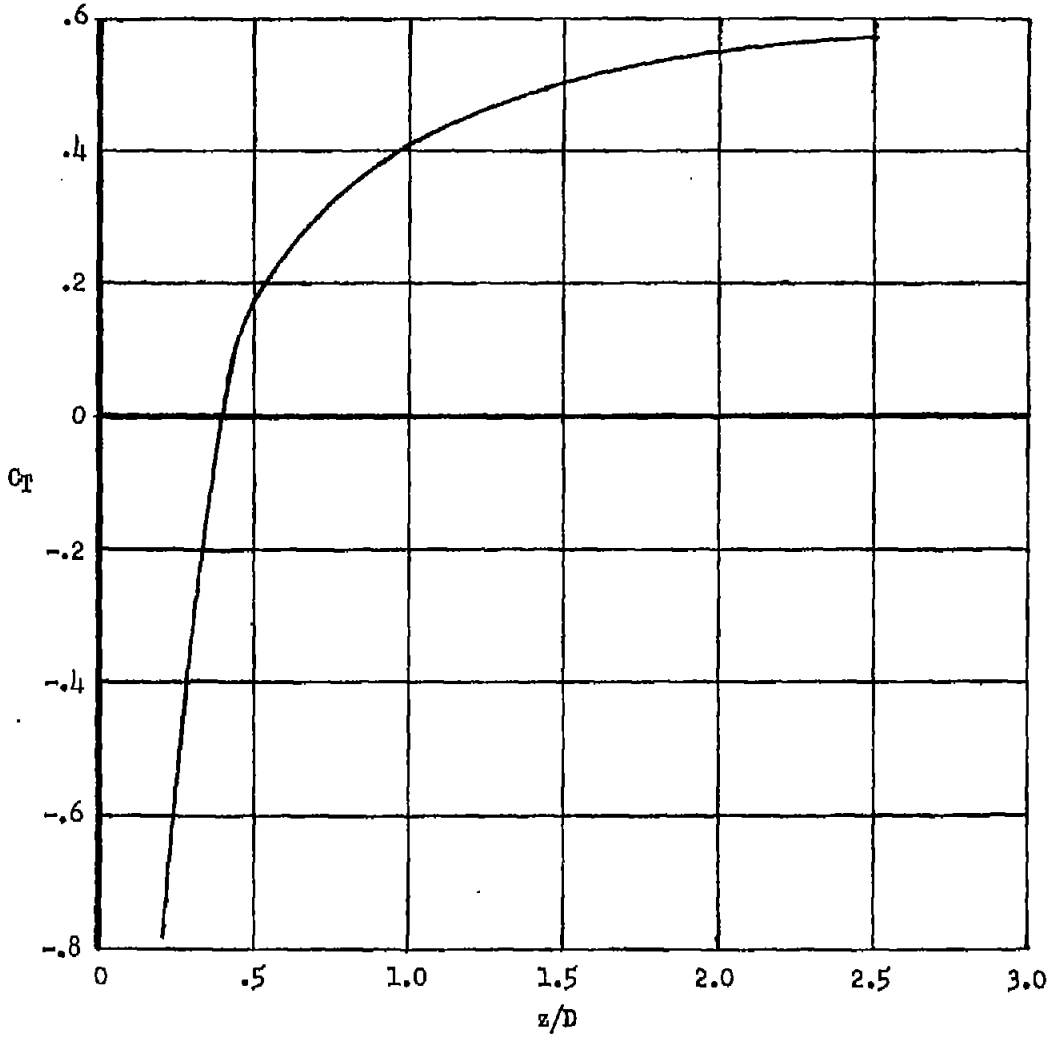

Figure 3.- Static thrust coefficients of the model with a ground plane, 2-foot-diameter propeller with the wing; $\beta = 35^{\circ}$.

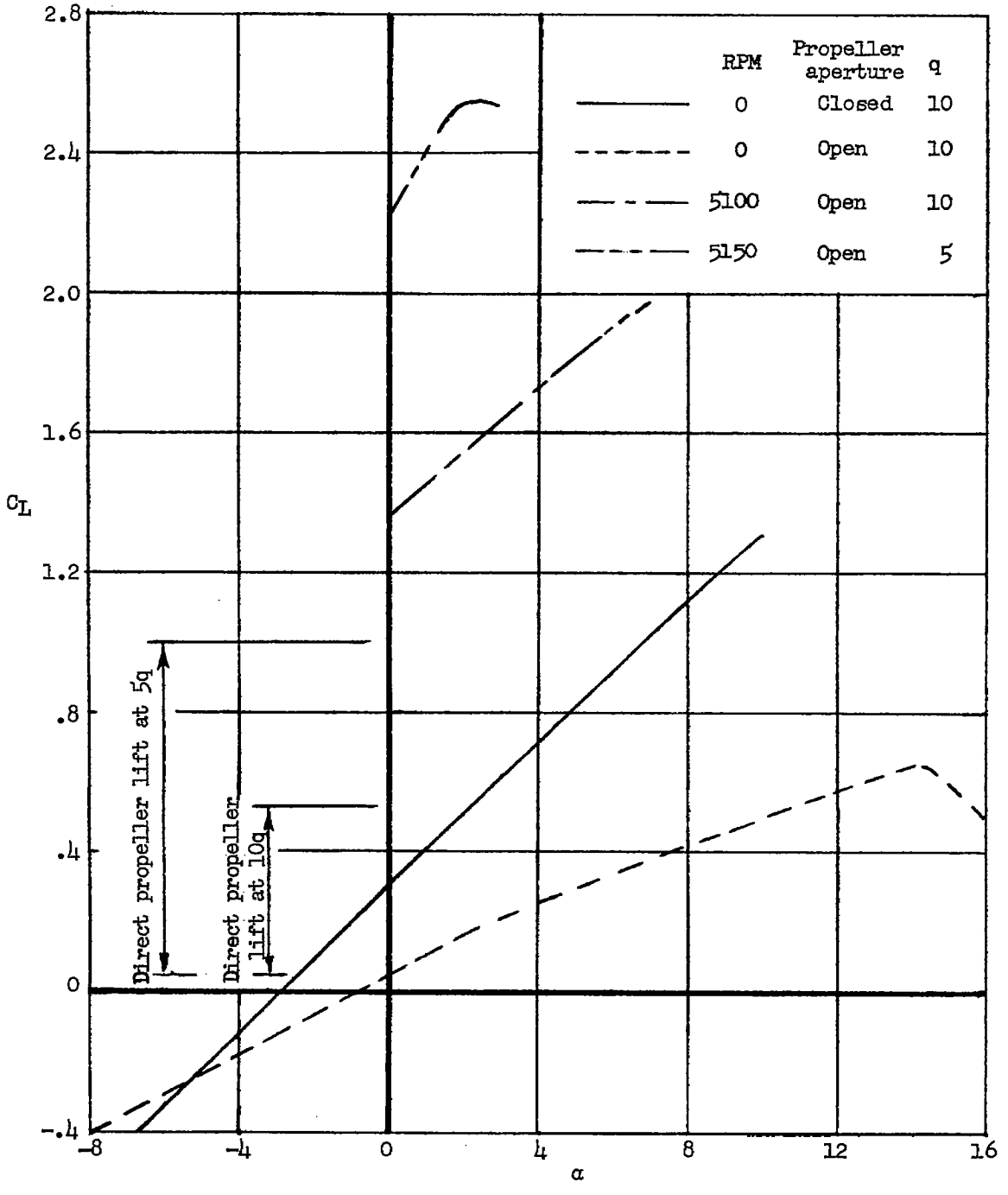

Figure 4.- Characteristics of wing with 3-foot-diameter propeller, with and without power applied to the propeller; $\beta = 10^{\circ}$.

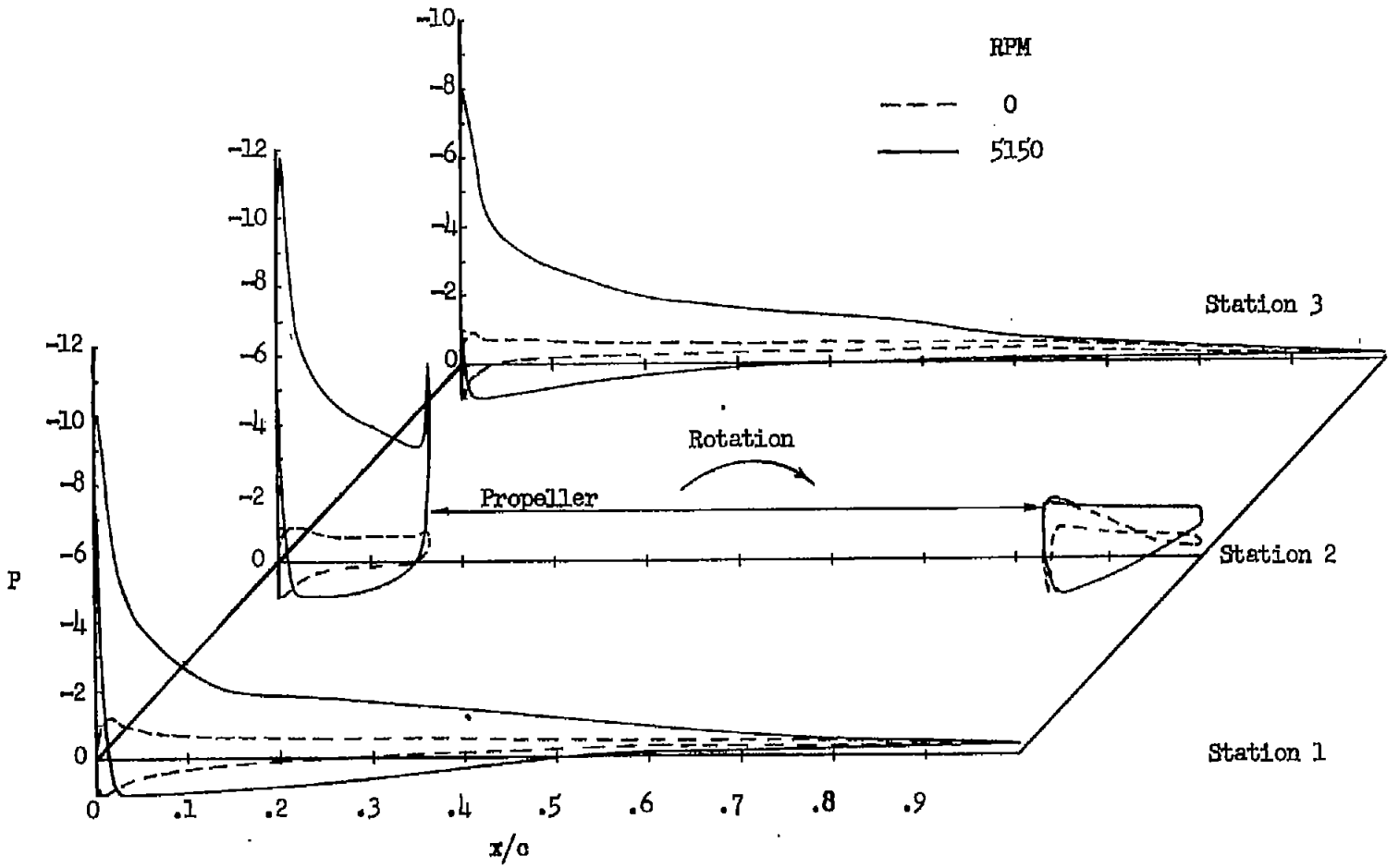

Figure 5.- Static pressure distribution on the wing with the six-bladed, 3-foot-diameter propeller; $\alpha = 0$, $q = 5$ psf.

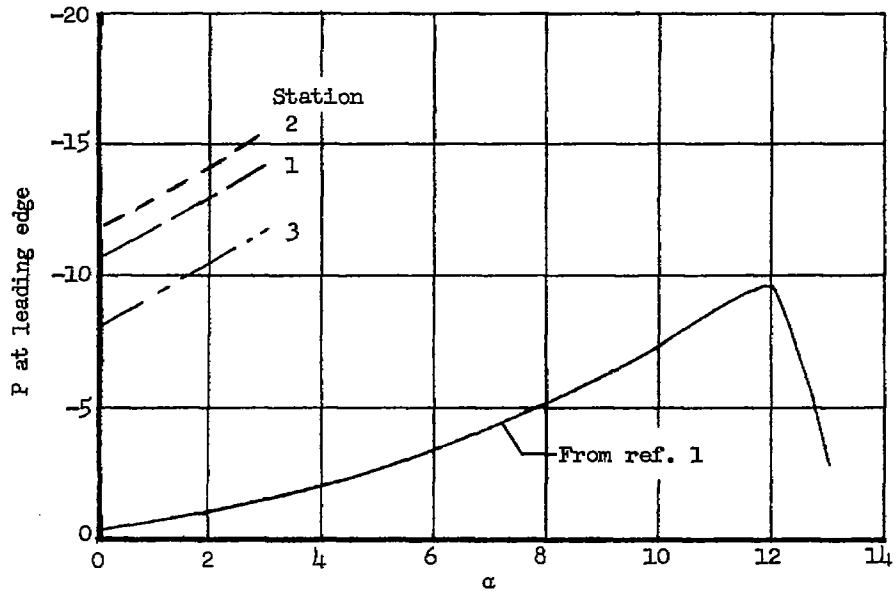

(a) q = 5 psf, rpm = 5150

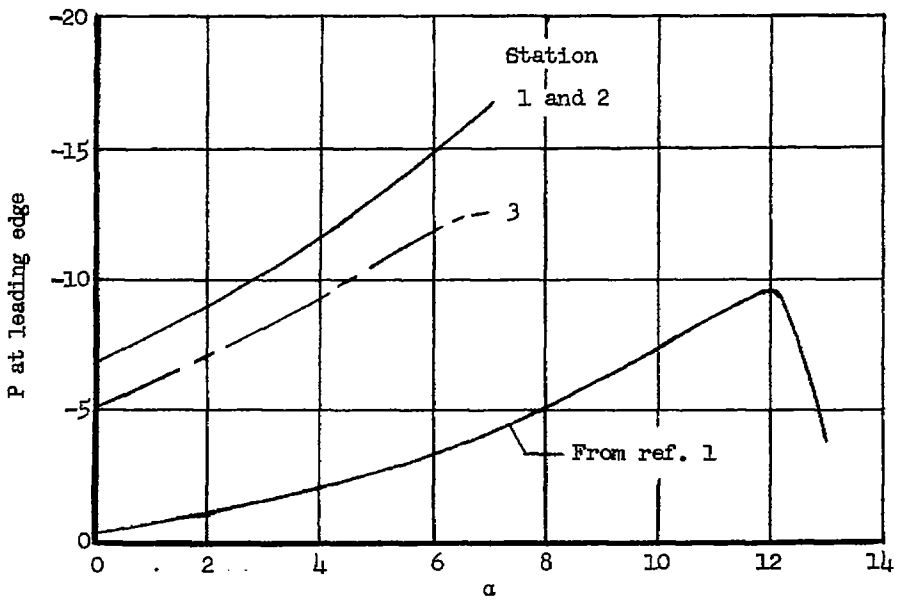

(b) q = 10 psf, rpm = 5100

Figure 6.- Variation of peak pressure coefficient with angle of attack, 3-foot-diameter propeller; $\beta = 10^{\circ}$.