NACA RM E56I11

6973

TECH LIBRARY KAFB, NM
0143768

NACA

RESEARCH MEMORANDUM

A BALANCED-PRESSURE SLIDING SEAL FOR TRANSFER OF PRESSURIZED AIR BETWEEN STATIONARY AND ROTATING PARTS

By Arthur N. Curren and Reeves P. Cochran

Lewis Flight Propulsion Laboratory
Cleveland, Ohio

NATIONAL ADVISORY COMMITTEE
FOR AERONAUTICS
WASHINGTON
January 9, 1957

TECH LIBRARY KAFB, NM
0143768

4193

CB-1

NATIONAL ADVISORY COMMITTEE FOR AERONAUTICS

RESEARCH MEMORANDUM

A BALANCED-PRESSURE SLIDING SEAL FOR TRANSFER OF PRESSURIZED AIR BETWEEN STATIONARY AND ROTATING PARTS

By Arthur N. Curren and Reeves P. Cochran

SUMMARY

A balanced-pressure sliding seal was developed to satisfy the need for a seal capable of transferring high-pressure air from stationary to rotating parts with a minimum of leakage. This seal was designed in connection with experimental investigations of air-cooled turbine rotor blades in turbojet engines where high sliding velocities and high ambient seal operating temperatures are encountered. The seal consists of two stationary concentric carbon-base seal rings sliding on a rotating chromium-plated disk. Blade cooling air passes through the center of the rings and the disk, and pressure-balancing air is introduced into the annular space between the two rings.

The seal was investigated experimentally to determine the amount of cooling-air leakage, the quantity of pressure-balancing air required, the temperatures of the sliding surfaces, and the wear of various seal parts. At sliding velocities up to 10,000 feet per minute and cooling-air pressures up to 38.3 pounds per square inch absolute, no leakage of cooling air occurred. The quantity of balance air required to operate the seal was about one-fourth to one-eighth the quantity of cooling air lost in leakage with the labyrinth seals used in this application under the same operating conditions. External cooling of the sliding surfaces was required to keep the temperatures below the oxidizing temperatures of the carbon-base seal rings. The rate of wear on the seal rings was unmeasurable on the inner ring and about 0.0005 inch per hour on the outer ring.

INTRODUCTION

In the experimental investigation of air-cooled turbine rotor blades in turbojet engines, an effective seal is required for transferring high-pressure cooling air from a stationary source to the rotating turbine wheel. It is essential that such a seal have a negligible or completely predictable leakage rate. Much of the NACA

turbine-cooling research is being conducted on production-model turbojet engines in which the turbine rotors have been modified to accommodate two or four air-cooled blades with the remainder of the blades being standard. In these engines, cooling air is supplied to the turbine rotor by means of an air-induction system built into the tailcone of the engine (ref. 1). For this application, a labyrinth seal has been used, but such a seal permits considerable leakage, and because of occasional unavoidable misalinement of mating parts, this leakage is quite often unpredictable.

4193

Sliding seals, in general, have lower leakage rates than labyrinth seals (ref. 2). However, for a tailcone air-induction system such as described herein, high sliding velocities and ambient operating temperatures would be encountered. To investigate the possible use of a form of the sliding seal for this application, a balanced-pressure sliding seal was developed. This seal was composed of a pressure-balancing chamber and two stationary carbon-base seal rings sliding on a chromium-plated disk. The seal rings were supported flexibly to compensate for angular misalinement, sliding-surface wear, and thermal expansion.

The seal was investigated at conditions anticipated in its intended operation, specifically, cooling-air pressures up to 38.3 pounds per square inch absolute and seal sliding velocities up to about 10,000 feet per minute. The results of this investigation may provide information that will be pertinent in the application of this type of seal to similar sealing problems.

SYMBOLS

p static pressure, lb/sq in. abs

w weight flow, lb/hr

ρ density, lb/cu ft

Suscripts:

am ambient

c cooling air

P pressure-balancing air

sl NACA standard sea-level conditions

CB-1 back 4193

APPARATUS AND INSTRUMENTATION

Balanced-Pressure Sliding Seal

Features of the balanced-pressure sliding-seal construction are shown in a cutaway drawing in figure 1. The seal employs a combination of two basic sealing devices, sliding surfaces and a pressure-balance chamber. The sliding-seal surfaces are two stationary concentric carbon-base rings that slide against a "superfinished" chromium-plated disk. The rings are spring-loaded for mechanical flexibility and to maintain good contact during operation. The disk is the only rotating part of the seal assembly. The pressure-balance chamber is the annular space enclosed by the disk, the seal rings, and the seal housing (fig. 1).

Seal housing. - The seal housing, which contains all the nonrotating parts of the seal, is a welded structure of 18-8 type stainless steel. This material was chosen for its resistance to oxidation at the high temperatures (700° to 1000° F) anticipated in the specific application of the seal to turbojet-engine air-induction systems. The flange on the rear of the housing provides the mounting support for the unit. Cooling air enters the seal through the central tube and passes directly through the unit. Pressure-balancing air enters a plenum chamber at the rear of the seal housing through a radial tube and is ducted to the pressure-balancing chamber after passing through chambers enclosing the support springs. In addition to directing the cooling- and balancing-air flows, the housing also provides support for the seal-ring mounting system.

Seal rings and disk. - The inner seal ring has an inner diameter of 1.25 inches and an outer diameter of 1.75 inches. The outer seal ring has inner and outer diameters of 2.81 and 3.31 inches, respectively. The rings are made of a nonimpregnated carbon-base material. Reference 3 indicates that such a material (identified as C-1 in ref. 3) sliding without lubrication against a superfinished chromium-plated disk was satisfactory from a wear standpoint at temperatures of 500° F and sliding velocities of 10,000 feet per minute. The seal-ring material was predominantly petroleum coke with an intermediate amount (about 20 to 35 percent) of graphite as a binder. The manufacturer's data indicate that the material chosen has a specific gravity of about 1.7, a scleroscope hardness of 75, and average transverse and compressive breaking strengths of 7000 and 14,000 pounds per square inch, respectively. Other materials are available and may be selected for the specific application.

The disk was fabricated of Inconel X, a high-temperature alloy, and the sliding surface was chromium plated to provide a high hardness. The sliding surface was then superfinished to a mirror-like finish of less than 2 microinches root mean square as measured with a profilometer

and within two light bands of deviation from flatness as measured with optical flats. This surface was at least as highly polished as the finest surfaces used on face-type sliding seals in modern turbine engines (ref. 3). The surface of the seal rings that slides against the disk was ground and lapped to a flat finish of about 12 microinches root mean square. Reasonable care was taken to ensure that the sliding surfaces were free of foreign matter which might interfere with good mating contact.

4193

Seal-ring support system. - To maintain good mating contact between the rotating and nonrotating sealing surfaces, a flexible loading system was used to support the seal rings. Figure 1 shows this system in detail. Each of the two seal rings is fixed by means of a ceramic cement to a seat ring fabricated of 18-8 type stainless steel. Each seat ring is independently supported by three spring-loaded plungers which are guided axially by holes in the housing structure. The springs are fabricated from high-carbon tool steel, and the plungers are 18-8 type stainless steel. The plunger tips extend into holes drilled in the seat rings to prevent turning of the rings while in operation. The entire seal-ring support system is held in the seal housing by means of a retainer cap bolted to the housing structure in the space between the two seal rings. The flexible loading system provides for considerable wear and thermal expansion compensation and a limited amount of permissible angular misalinement of disk and seal housing without affecting sealing efficiency. The allowable angular misalinement is a function of the clearance between the seal housing and shoulders on the seat rings. These shoulders (on the inner and outer diam. of the seat rings) provide low-clearance seals to restrict the leakage of air around the seat rings. A compromise must be made for the individual application between leakage rates through this clearance and the amount of misalinement anticipated. For the seal evaluated herein, an allowable angular misalinement of about 7°, which is considered adequate, was specified in the design. Also, an allowable radial misalinement, a function of the disk air passage and inner-seal-ring diameters, of 0.10 inch was established. For a firm sealing contact at assembly, the seal was installed in such a manner that the seal rings were depressed about half their allowable axial travel, or about 1/4 inch.

Balance air, before ultimately reaching the pressure-balance chamber between the two seal rings, first passes through baffled chambers which contain the springs, as shown in figure 1. Consequently, cooling of the springs is accomplished by this air, a feature which may be quite desirable at high-temperature operation.

Engine Installation

The seal was tested in the air-induction system of a turbojet engine modified for experimental investigations of air-cooled turbine

rotor blades. Figure 2 shows the system with the balanced-pressure seal installed. A detailed description of this air-induction system (with a labyrinth seal in place of this seal) is given in reference 1. The stationary parts of the seal were mounted within the inner cone of the tailcone, and the disk was bolted to the hub of the turbine rotor. Cooling air and balance air were ducted to the seal by means of tubes passing through the supporting struts of the tailcone. The cooling air passes through the center of the seal and into a ducting system attached to the rear face of the turbine rotor which transfers the air to the cooled blades. Although the seal was protected from direct contact with the hot exhaust gases at the turbine exit, the temperature in the vicinity of the seal would have been about 700° to 1000° F during engine operation unless some cooling of the space was effected. To keep the temperature level within the inner cone substantially below that of the engine exhaust gases, a scavenge-air system was used. Part of the scavenge air was dumped nondirectionally into the inner cone, and the remainder was directed against the rotating disk to cool the sliding surfaces in this vicinity (see fig. 2).

4193

Air-Supply and Metering Systems

A schematic diagram of the air-supply apparatus used is shown in figure 3. Cooling air and balance air, supplied by a laboratory high-pressure-air supply system, were ducted to the seal through separate lines. The pressure level and flow rates in these lines were independently controlled with appropriate pressure regulators and flow control valves. In addition, each line was equipped with a calibrated rotameter to measure the respective flow rates. Since experience with cooled-turbine air-induction systems has shown that a cooling-air supply pressure below atmospheric sometimes exists, a vacuum system was connected to the balance-air system to provide a pressure balance at this condition. The vacuum system, complete with flow control valve and rotameter, was installed in such a way that either it or the positive pressure system could be placed in operation by the proper manipulation of two shutoff valves. A system for regulating the pressure level and metering the cooling-air-outlet flow rate was installed for use in the nonrotating tests of the seal. No attempt was made to regulate or meter this outlet air flow during rotating tests. (The nature and purpose of the nonrotating and rotating tests are described in the section PROCEDURE.)

Instrumentation

The instrumentation used in this investigation is shown schematically in figure 3. Other than the static-pressure and temperature measurements at each of the four rotameter stations, the instrumentation was restricted to the seal proper. Static-pressure taps used in the

balancing of seal pressures were located on either side of the normal operating position range of the inner seal seat ring shoulder on the outside diameter of the central cooling-air tube (see inset, fig. 3). Pressures and temperatures within the tailcone in the immediate vicinity of the seal were indicated by a pressure tap and thermocouple located on the outside shell of the seal near the seal rings. All the aforementioned thermocouples were iron-constantan.

A chromel-alumel thermocouple was located about 1/32 inch beneath the sliding surface of the disk at the normal operating position of each of the two seal rings to provide an indication of mating-surface temperatures at these points. A rotating thermocouple pickup consisting of a slip-ring and brush system was utilized for transferring the electromotive force generated by the thermocouples to temperature-measuring equipment. 4193

PROCEDURE

Experimental

The experimental tests conducted on the seal determined (1) the leakage of cooling air, (2) the quantity of balance air required, (3) the temperature of the sliding surfaces, and (4) the operating and wear characteristics of the seal. Items (3) and (4) were investigated only under conditions where the disk was rotating. The first two items were investigated with the disk both rotating and nonrotating.

A balance of the indicated pressures in the cooling-air and the pressure-balancing chambers was maintained at all times during the experimental tests. The primary method used to determine whether there was a leakage of cooling air under these balanced-pressure conditions was a "no-flow" test. For the no-flow test, the exit to the cooling-air chamber was closed so that any cooling air leaving the seal escaped in the form of leakage. This testing method permitted a leakage evaluation of the seal with the use of only one flow-metering station (at the seal inlet) and, for this reason, is particularly useful in the testing of rotating seals. A secondary method used to check for leakage of cooling air was a "flow" test in which the cooling-air flows at the inlet and the outlet of the seal were measured and compared. Any difference in flow rates would be leakage into or out of the cooling-air chamber. This latter method could only be used for the nonrotating test.

Nonrotating tests. - During the nonrotating test no relative motion occurred between the disk and the seal rings. These nonrotating tests established a comparison between the cooling-air leakage measurements under flow and no-flow conditions. If good agreement was found to exist in the nonrotating tests between the two measurements for equivalent

values of cooling-air pressure, it could be assumed that no-flow rotating tests would also be a good measure of conditions existing under flow rotating conditions.

4193

The apparatus shown schematically in figure 3 was used for the nonrotating tests. For the no-flow conditions, the shutoff valve on the seal-outlet line was closed. The seal was then subjected to a range of values of cooling-air pressures up to 51 pounds per square inch absolute with corresponding values of balance-air pressures. The maximum pressure levels (51 lb/sq in. abs for the nonrotating case and 38.3 lb/sq in. abs for the rotating case) were limitations imposed by the flow capacity of the rotameter in the balance-air line. The quantity of balance air required to maintain a balanced-pressure condition at various pressure levels was measured. The reading of the rotameter in the cooling-air line was also recorded to determine whether there was leakage of the cooling air under the conditions of indicated balanced pressures.

Several representative check points at various pressure levels were run under flow conditions. For these tests the shut-off valve at the seal outlet was opened, and the airflow rates in the cooling-air lines into and out of the seal were measured for comparison. The airflow rate in the balance-air line was also recorded during the flow tests.

Rotating tests. - During the rotating tests there was relative motion between the disk and the seal rings. The disk was mounted on the turbine rotor, and the remainder of the seal was mounted in the tailcone of a turbojet engine as shown in figure 2. The testing apparatus shown in figure 3 (with the exception of the seal-outlet line) was used for these tests. A blank plate between the disk and the turbine rotor was used to seal off the cooling-air chamber for the rotating no-flow tests.

During the no-flow tests, the engine was operated at several speeds up to and including the rated speed of 11,500 rpm. This highest engine speed resulted in a maximum sliding velocity on the outer diameter of the outer seal ring of about 10,000 feet per minute. Cooling-air and balance-air pressures up to 38.3 pounds per square inch absolute were imposed on the seal. The flow rates of balance air required to maintain balanced-pressure conditions were recorded. The leakage of cooling air at these indicated balanced-pressure conditions was also checked with the cooling-air-inlet rotameter. The temperatures of the disk in the vicinity of the seal rings were recorded at each combination of speed and air pressure values.

At the completion of the rotating no-flow tests, the blank plate was removed from the seal, and the engine was operated over the same speed range as before while cooling air was supplied through the seal to an air-cooled blade in the turbine rotor (see fig. 2). A range of

airflow rates and pressure levels was investigated. This series of rotating flow tests was made to determine if any unexpected operating conditions might exist with air flowing through the seal.

During the rotating tests, the seal was completely disassembled at regular intervals, and physical changes due to operation were noted. Since the mating surfaces of the sliding seal are logically expected to have the highest wear rates, these surfaces were carefully inspected and measured to determine rate of wear. Wear of the shoulders of the seat rings, temperature patterns, and dimensional changes in the springs were also checked. 4193

Whenever necessary during both the rotating and the nonrotating tests, the vacuum system (see fig. 3) was substituted for the positive pressure system on the balance air to maintain balanced-pressure conditions.

Calculation

Since the flow of fluid through an enclosure or a restriction in a flow system is, in general, a function of the pressure differential between the inlet and outlet of the restriction, seal characteristics are frequently evaluated graphically in a plot of leakage weight-flow rate against a pressure differential parameter. For the present investigation, the required flow rate of balance air was calculated and presented in the following manner: The weight-flow rate of the balance air was determined from the reading of the balance-air rotameter, and the pressure differential parameter $\rho_P/\rho_{sl}(p_P - p_{am})$ was calculated as the product of the ratio of balance-air density to standard air density and the pressure difference between the balance-air and the ambient tailcone pressures. For evaluating typical labyrinth seals for comparison with this seal, a similar parameter using cooling-air pressure and density in the labyrinth-seal system in place of balance-air conditions was used.

RESULTS AND DISCUSSION

Operation of Balanced-Pressure Sliding Seal

Leakage of cooling air. - Experimental testing of the balanced-pressure sliding seal showed that leakage from the cooling-air chamber could be completely eliminated over the range of operating conditions investigated. No leakage of cooling air was found to exist at balanced-pressure conditions during the no-flow and flow nonrotating tests and the no-flow rotating tests. Although no leakage measurements could be made during the rotating flow test, it can be assumed from the results of these other tests that the cooling-air leakage was zero for the rotating flow conditions also.

4193

CB-2

Expenditure of pressure-balance air. - The quantities of pressure-balance air required to maintain balanced-pressure conditions for a range of pressure levels (pressure differential parameters) in the nonrotating no-flow tests and for ranges of both pressure levels and sliding velocities in the rotating no-flow tests are shown in figure 4. It can be seen from this figure that the quantity of balance air required increased somewhat with increased sliding velocity. This trend is probably due to the greater vibration frequencies and misalinement disturbances encountered with increased engine speed. Some check measurements made during the nonrotating and the rotating flow tests showed that higher balance-air flow rates were required for these conditions than for the corresponding no-flow conditions. In all cases, however, the rate flows of balance air required were less than 100 pounds per hour for the range investigated.

Figure 5 presents a comparison of the quantity of balance air required to operate this seal and the leakage of cooling air incurred in the operation of typical labyrinth seals in the same application (i.e., 11,500-rpm engine speed in air-induction system illustrated in fig. 2). The curve for the sliding seal on this figure is taken from figure 4. The band of labyrinth-seal data represents a number of labyrinth-seal units on which unpublished data have been obtained at the Lewis laboratory. For the operating conditions shown in figure 5, the quantity of balance air expended on the balanced-pressure seal is roughly one-fourth to one-eighth the quantity of cooling air leaking from the labyrinth seal. This same magnitude of air loss difference was found to exist at other operating conditions also. In addition to the savings in air flow, the balanced-pressure sliding seal operates with no cooling-air leakage. Therefore, no correction to the measured quantity of cooling-air flow is necessary with this seal. Such leakage corrections as may be determined for the labyrinth seal from calibration tests are often in error because of wear or misalinement, or both, of parts during operation. As a result, accurate determination of the quantity of air passing through the labyrinth-seal outlet is difficult.

Sliding-surface temperatures. - Since carbon begins to oxidize at 662° F (ref. 4), sliding-surface temperatures should be kept at a value safely below this limit to ensure good seal life. These temperatures were checked with the thermocouples in the disk (fig. 3). The temperatures of the sliding surfaces were affected by heat conduction from the turbine rotor and convective heating from the ambient gas within the inner cone of the tailcone (fig. 2), in addition to frictional heating of the sliding surfaces.

The rotating tests were originally begun without benefit of the external cooling provided by the cooling-air tube, which is directed at the sliding surfaces (fig. 2). The indicated disk temperatures at a

maximum sliding velocity of 10,000 feet per minute were 1090° and 940° F at the outer and inner seal ring positions, respectively. With a constant flow of external cooling on the sliding surfaces, the disk temperatures reached a maximum value of about 440° F. With a constant blade cooling-air pressure level, the disk temperatures increased with sliding velocities (engine speed) from about 260° F at 6940 feet per minute to about 440° F at 10,000 feet per minute. It was also found that at a constant sliding velocity, the disk temperatures increased with increasing blade cooling-air (and balance-air) pressure level. At a maximum sliding velocity of 10,000 feet per minute, the disk temperatures varied from an average of 380° F with a pressure of 17.2 pounds per square inch absolute to an average of 435° F at 32 pounds per square inch absolute. This increase in sliding-surface temperatures is apparently due to increased contact pressure on the seal rings, with an increase in balance-air pressure. Reference to figure 1 will show that the inner seal ring - seat ring combination is surrounded by cooling-air and balance-air pressures on all sides. (It is assumed here that the air pressure existing between the sliding faces is equal to that in the surrounding chambers.) The outer ring is exposed to balance-air pressure all around except for the forward part of the outer diameter which is under tailcone ambient pressure conditions. From these pressure conditions on the rings it would seem that no appreciable pressure difference can exist between the rear face of the seat ring and the sliding face of the seal ring unless some pressure lower than the balance-air pressure exists between the lapped surfaces of the sliding faces.

4193

Component Evaluation

The total operating time for the rotating tests on this seal was about $13\frac{1}{2}$ hours. While this amount of operating time did not allow a thorough evaluation of all phases of the mechanical problems that may be encountered in the operation of this seal, some of the indicated trends are valuable information from the standpoint of other sealing applications. The operational performance of the more important components of the seal are discussed in the following sections.

Sliding surfaces. - When the temperatures of the sliding surfaces were kept below the oxidizing temperature of the carbon-based rings (662° F), no appreciable wear of the sliding surfaces was noted. In the initial rotating tests (prior to the use of the external cooling of the sliding surfaces) when this limit was exceeded, rapid wearing of the sliding face of the seal rings did occur. After 20 minutes of operation at a maximum sliding velocity of about 10,000 feet per minute, the disk had a smooth resinous film deposited intermittently about 0.001-inch thick at the wear track of the outer seal ring. The axial length of this seal ring had been reduced noticeably by wear. A trace of such a film was found at the inner seal ring wear track on the disk. The film was extremely hard and had to be removed mechanically.

4193

CB-2 back

After the external cooling was introduced and the temperature level of the sliding surfaces was reduced to an average of about 435° F, no further deposits of this film were encountered. After a reasonable period of operation to allow the seal-ring sliding surfaces to become properly lapped to the disk surface, the seal rings were measured periodically to determine the amount of wear. No measurable wear could be detected on the inner ring. A wear rate of about 0.0005 inch per hour on the outer ring was measured. This rate of wear was considered satisfactory for the present application of the seal.

Seal seat rings. - Some wear on the shoulders of the seal seat rings (fig. 2) was observed. This amounted to a maximum of about 0.001 of the diameter of the outer seat ring at the end of the test. This wear was caused by slight relative motion between the seat rings and the seal housing as a result of thermal expansion, angular misalinement of the sliding surfaces, and possible vibration of the parts of the seal. Any wear on these shoulders would tend to increase the clearance gaps through which air could pass and would result in higher flow rates of balance air to maintain balanced-pressure conditions in the seal. However, the rate of wear experienced here was not considered to be excessive.

The attachment of the seal rings to the seal seat ring by the use of ceramic cement was not entirely satisfactory. After about $13\frac{1}{2}$ hours of operation, the cement crumbled and failed probably because of vibration and differential expansion effects. This allowed the seal rings to turn relative to the seat rings and opened another path of leakage for the balance air. Mechanically keying the seal rings to the seat rings would prevent any relative motion and would probably strengthen the cemented joint to prevent failure.

Other components. - The other components of the seal operated satisfactorily and showed no significant physical changes during the investigation. Introducing the balance air into the seal in such a manner that it flowed over the loading springs (fig. 1) provided adequate cooling of the springs for the testing conditions. The degree of angular and radial misalinement of the sliding surfaces permitted by the design of the seal was also found to be adequate for the present application.

SUMMARY OF RESULTS

The results of the experimental investigation of this balanced-pressure sliding seal are summarized as follows:

1. With balanced-pressure conditions between the cooling-air and the balance-air chambers, leakage of cooling air was completely

eliminated over the entire range of sliding velocities (10,000 ft/min, max.) and pressure levels (up to 38.3 lb/sq in. abs) investigated.

2. Under the same operating conditions, the flow rate of balance air required to operate this seal was approximately one-fourth to one-eighth the flow rate of cooling air lost through leakage for typical labyrinth seals in the same application.

3. External cooling of the sliding surfaces was required to keep temperatures below the oxidizing temperature of the carbon-based material of the seal rings (662° F). 4193

4. The wear rate of the carbon-based seal rings was found to be satisfactory for the present application. The maximum wear rate was about 0.0005 inch per hour on the outer ring and was not measurable on the inner ring.

Lewis Flight Propulsion Laboratory
National Advisory Committee for Aeronautics
Cleveland, Ohio, September 13, 1956

REFERENCES

1. Ellerbrock, Herman H., Jr., and Stepka, Francis S.: Experimental Investigation of Air-Cooled Turbine Blades in Turbojet Engine. I - Rotor Blades with 10 Tubes in Cooling-Air Passages. NACA RM E50I04, 1950.

2. Crego, Donald F.: Sealing High Pressure Gas. Machine Design, vol. 27, no. 9, Sept. 1955, pp. 162-168.

3. Johnson, Robert L., Swikert, Max A., and Bailey, John M.: Wear of Typical Carbon-Base Sliding Seal Materials at Temperatures to 700° F. NACA TN 3595, 1956.

4. Mantell, Charles L.: Industrial Carbon. Second ed., D. Van Nostrand Co., Inc., 1946, p. 418.

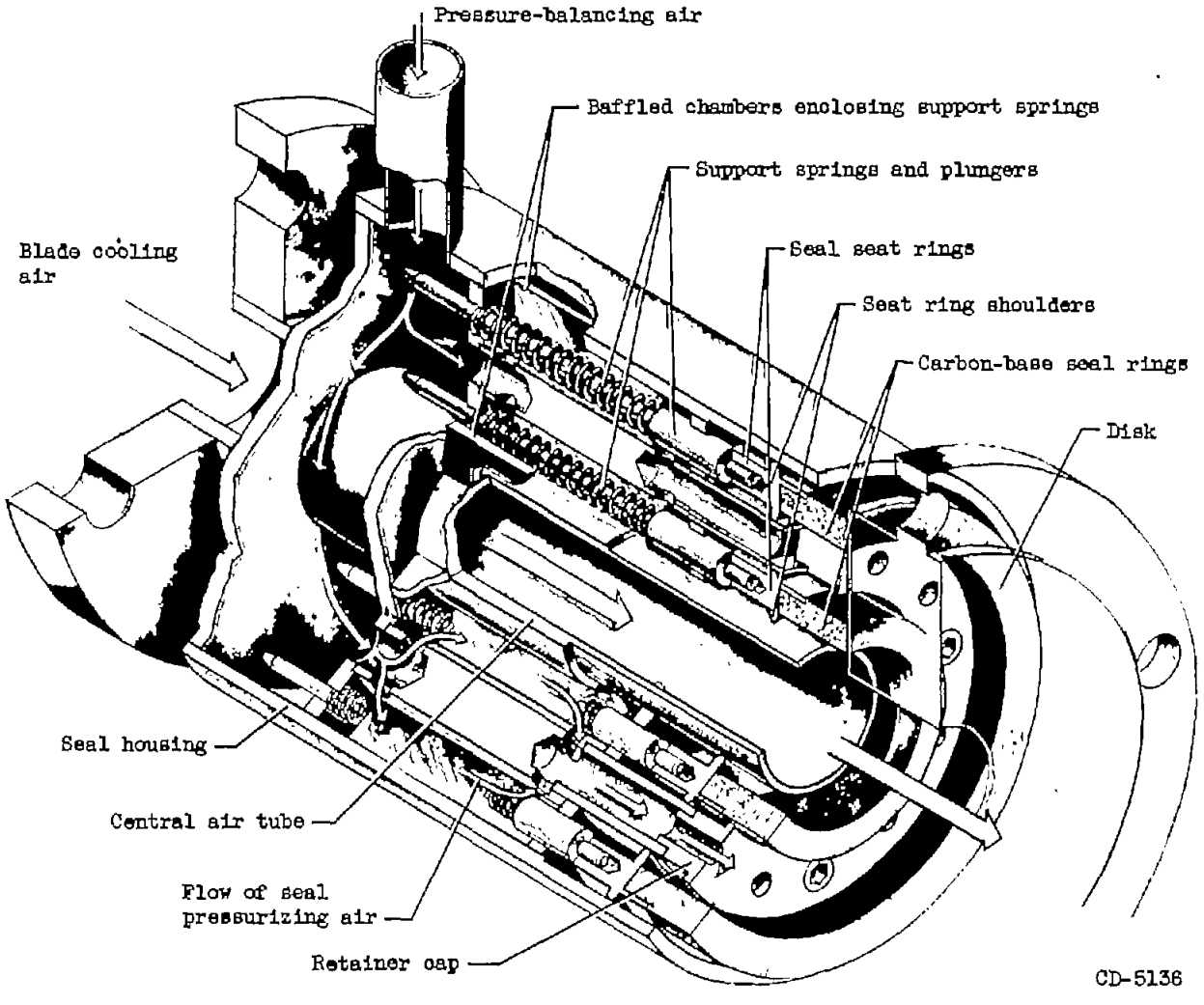

Figure 1. - Cutaway drawing of balanced-pressure sliding seal.

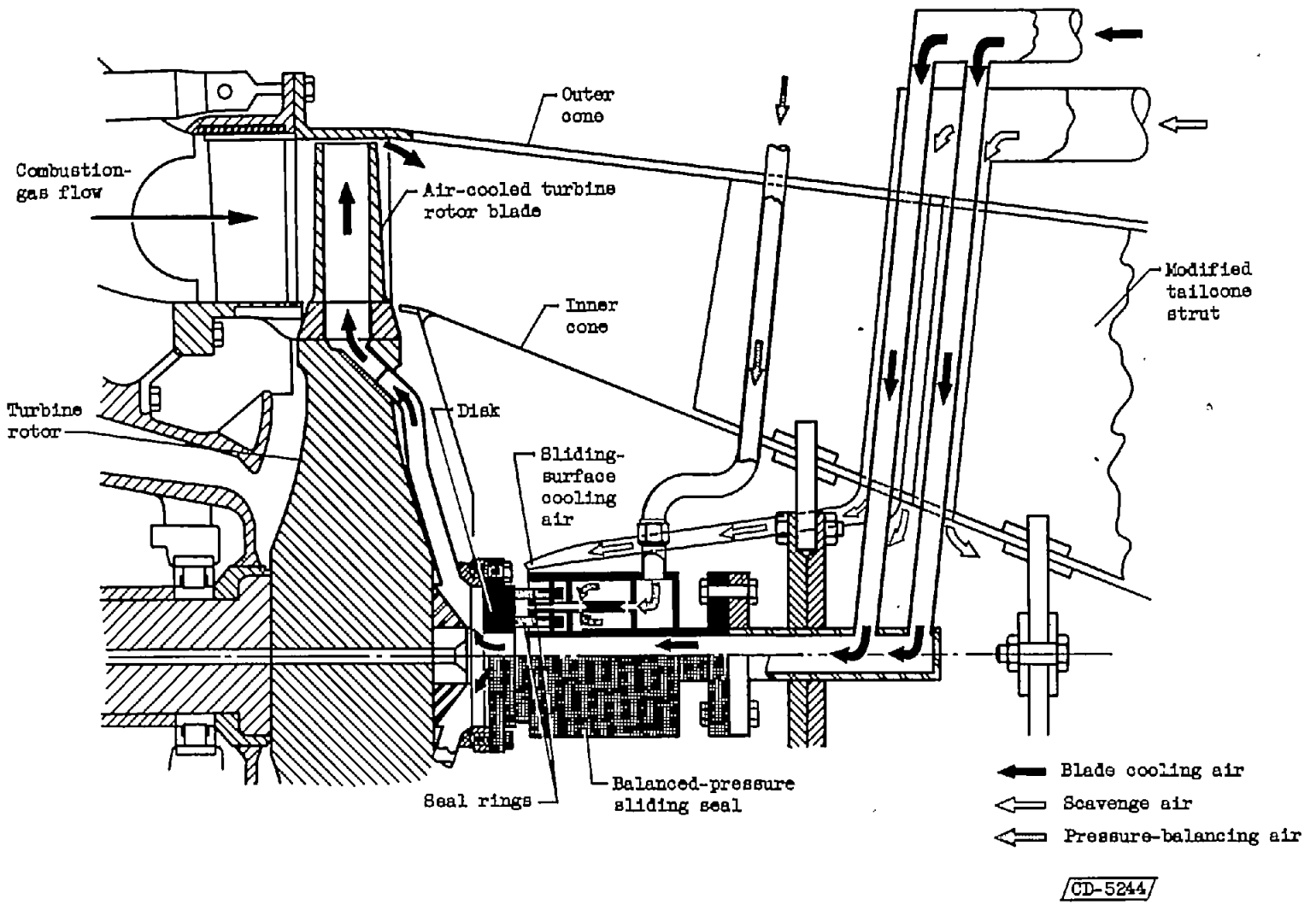

Figure 2. - Balanced-pressure sliding seal installed in tailcone of turbojet engine modified for turbine-cooling research.

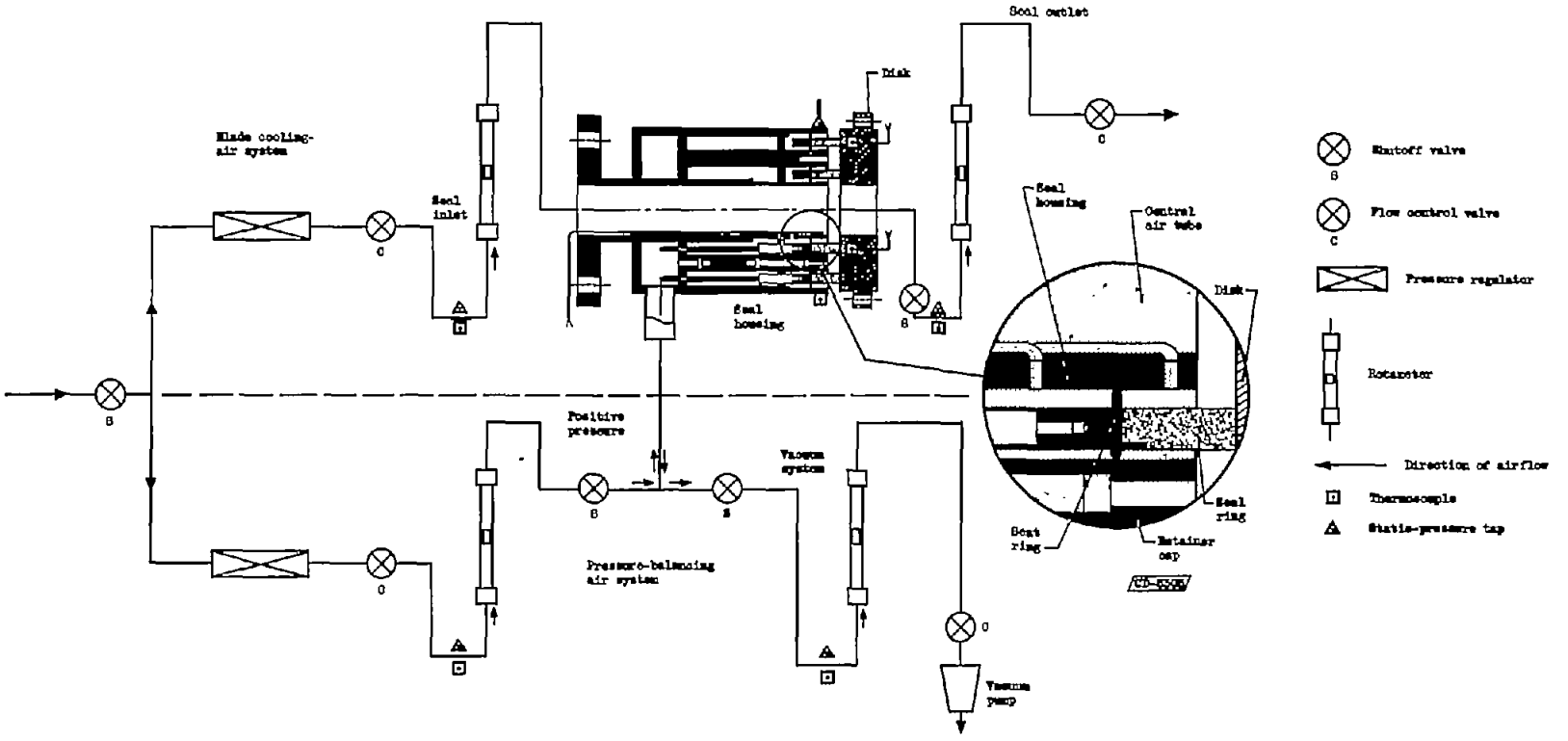

Figure 3. - Schematic diagram of air-supply and metering apparatus.

4193

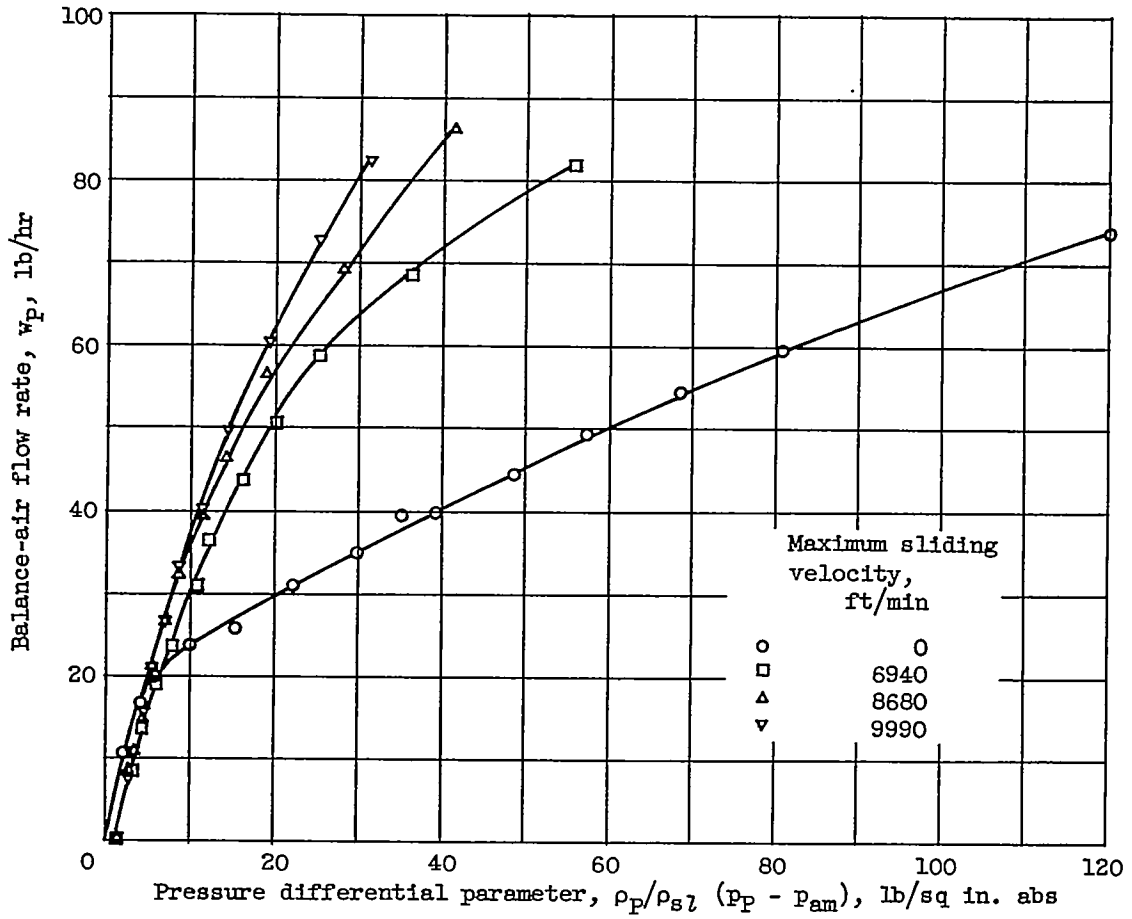

Figure 4. - Variation of balance-air flow rate with pressure differential parameter for balanced-pressure sliding seal.

4193

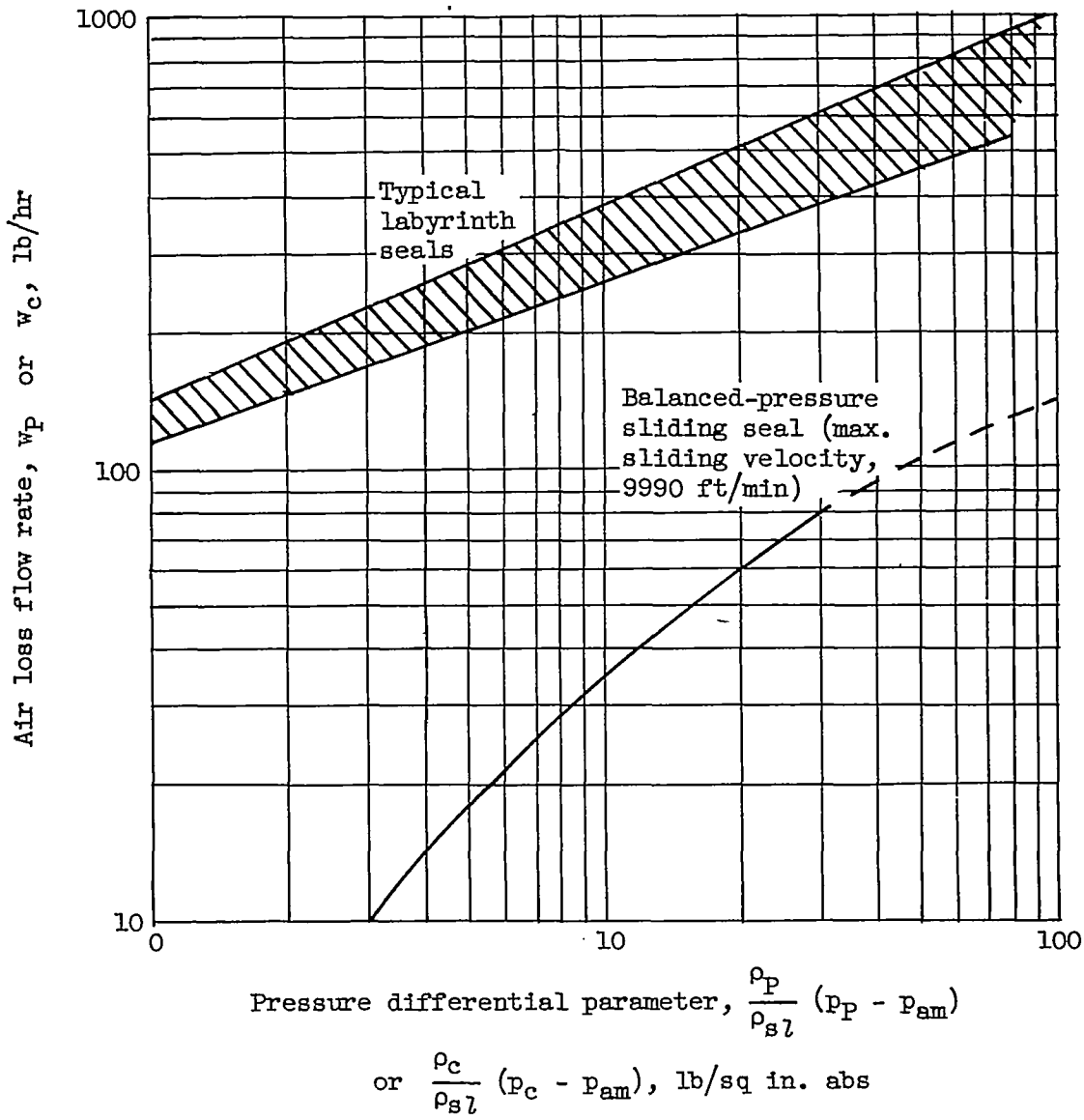

Figure 5. - Comparison of air loss flow rates for balanced-pressure sliding seal and typical labyrinth seals used in same turbojet-engine air-induction system at engine speed of 11,500 rpm.