NACA TM 1417

7967

TECH LIBRARY KAFB, NM
0144510

NATIONAL ADVISORY COMMITTEE FOR AERONAUTICS

TECHNICAL MEMORANDUM 1417

ON THE SPECTRUM OF NATURAL OSCILLATIONS OF TWO-DIMENSIONAL LAMINAR FLOWS

By D. Grohne

Translation of "Über das Spektrum bei Eigenschwingungen ebener Laminarströmungen." Zeitschrift für angewandte Mathematik und Mechanik, vol. 34, no. 8-9, August-September 1954.

Washington
December 1957

AFMDC
TECHNICAL LIBRARY
AFL 2811

TECH LIBRARY KAFB, NM
0144510

1F

NATIONAL ADVISORY COMMITTEE FOR AERONAUTI

TECHNICAL MEMORANDUM 1417

ON THE SPECTRUM OF NATURAL OSCILLATIONS OF TWO-DIMENSIONAL LAMINAR FLOWS*

By D. Grohne

1. INTRODUCTION AND STATEMENT OF THE PROBLEM

In the investigation of stability of a two-dimensional laminar flow with respect to small disturbances, we describe a disturbance of the stream function moving downstream (in the direction of the x-axis) by the "partial wave formula"

$$\psi = \varphi(y)e^{i\alpha(x-ct)} \tag{1.1}$$

and obtain then for the distribution of the disturbance amplitude $\varphi(y)$ at right angles to the main flow the so-called stability differential equation of the fourth order

$$(U - c)\left(\varphi'' - \alpha^2\varphi\right) - U''\varphi = \frac{1}{i\alpha R}\left(\varphi^{(4)} - 2\alpha^2\varphi'' + \alpha^4\varphi\right) \tag{1.2}$$

where $U(y)$ designates the velocity profile of the basic laminar flow In addition, we enforce certain boundary conditions, in the specific case of the parallel channel

$$\varphi(\pm 1) = 0 \quad \varphi'(\pm 1) = 0 \tag{1.3}$$

---

*"Über das Spektrum bei Eigenschwingungen ebener Laminarströmungen." Zeitschrift für angewandte Mathematik und Mechanik, vol. 34, no. 8-9, August-September 1954, pp. 344-357.

which express the fact that even the disturbed flow adheres to the bounding walls. In these equations, the velocities U and c are referred to a velocity of reference U_0; furthermore, the lengths x, y, and $1/\alpha$ to half the channel width b, and finally the time t to the time unit b/U_0. The Reynolds number R is defined by

$$R = \frac{U_0 b}{\nu}$$

The boundary-value problem consisting of differential equation and boundary conditions determines, for each pair of parameters α and R, a spectrum of an infinite number of eigenvalues c_n. The associated disturbances (1.1) are damped when $\mathrm{Im}(c_n) < 0$, and are excited when $\mathrm{Im}(c_n) > 0$; α is assumed to be positive and real. A basic flow is called stable for a value of R when the entire eigenvalue spectrum c_n, for all possible values of α, contains only damped disturbances. Thus the range of the Reynolds number R is divided up into a region of stability $0 < R < R^*$ and a region of instability $R > R^*$, which are separated from one another by the stability boundary R^*.

Since, in the literature published up till now almost exclusively neutral oscillations - at most, excited oscillations - have been investigated, we shall investigate in the present report, following a suggestion of Prof. Dr. W. Tollmien, the entire spectrum of the eigenvalues c_n as a function of α and R; for simplification, we shall emphasize the dependence on αR. A general solution of this problem is possible in the following two special cases: (1) in the case $U = \text{const.}$ which is equivalent to $U = 0$. We deal here with the "oscillations of a fluid at rest" already treated by Lord Rayleigh. The solution is possible in the domain of elementary and transcendental functions. The second special case concerns the rectilinear Couette flow $U = y$ investigated by L. Hopf (ref. 5). The solution can be reduced to tabulated Bessel functions.

For more general velocity profiles $U(y)$, the eigenvalues c_n can be determined approximatively analytically in the following limiting cases:

I. In the limiting case $\alpha R \to 0$ for arbitrary order n of the eigenvalues c_n

II. In the limiting case $n \to \infty$ for constant αR

III. In the limiting case $\alpha R \to \infty$ for restricted order n.

A continuous transformation of the three cases into one another for constant subscripts is possible in the above named special cases $U = 0$ and $U = y$. The assignment of subscripts of the eigenvalues c_n can be made in the cases I and II according to increasing damping, that is, according to the rule

$$\mathrm{Im}\left(c_{n+1}\right) \leqq \mathrm{Im}\left(c_n\right) \tag{1.4}$$

However, this rule is not always applicable to the case III when the subscripts used are to remain constant for continuous variation of α and R.

The boundary-value problem formulated in (1.2), (1.3) is, generally, not self-adjoint; thus, the reduction to the well-known statements and estimates of the Sturm-Liouville theory is eliminated. The eigenfunctions generally do not form an orthogonal system. They do form, however, as O. Haupt (ref. 3) has shown, under certain assumptions, a system of functions that is complete with respect to each of the functions which satisfy the boundary conditions (1.3) and are four times continuously differentiable. This system of functions can be transformed into an orthogonal system.

2. THE LIMITING CASES $\alpha R \to 0$ FOR ARBITRARY ORDER n OF THE EIGENVALUES c_n, AND $n \to \infty$ FOR LIMITED αR

As already found by Lord Rayleigh (ref. 8), the entire system of eigenfunctions and eigenvalues in the case of the basic flow $U = 0$, that is, for a medium at rest, can be given as a closed system. Since these eigenvalues are suitable for approximative representations in the case of more general basic flows also, we shall derive them here briefly. In the case of the basic flow $U = 0$, the stability differential equation (1.2) is simplified to

$$\Phi^{(4)} - 2\alpha^2\Phi'' + \alpha^4\Phi + i\alpha R \cdot C\left(\Phi'' - \alpha^2\Phi\right) = 0 \tag{2.1}$$

where we shall denote the eigenvalues by C, to distinguish them from the eigenvalues c of the general stability differential equation. The equation is solved by each of the functions

$$\Phi_I(y) = \cosh \omega y - \cosh \alpha y \frac{\cosh \omega}{\cosh \alpha} \qquad \Phi_{II}(y) = \sinh \omega y - \sinh \alpha y \frac{\sinh \omega}{\sinh \alpha} \tag{2.2}$$

if we put

$$\omega^2 = \alpha^2 - i\alpha R \cdot C \tag{2.3}$$

The part $\Phi(\pm 1) = 0$ of the boundary conditions is identically satisfied. The remaining boundary conditions $\Phi'(\pm 1) = 0$ lead to the related branches of the eigenvalue equation:

$$\left.\begin{aligned} \alpha \tanh \alpha &= \omega \tanh \omega \qquad \text{in the case I} \\ \alpha \coth \alpha &= \omega \coth \omega \qquad \text{in the case II} \end{aligned}\right\} \tag{2.4}$$

The equations (2.4) have, for positive α, no roots ω outside the imaginary axis of the complex ω-plane. With ω, also $-\omega$, is an eigenvalue associated with the same eigenfunction. Thus it is sufficient to consider only the positive imaginary eigenvalues ω. If we designate even eigenfunctions by even subscripts and odd eigenfunctions by odd subscripts, the equation (2.4) may have the solutions ω_0, ω_2, ω_4, . . . in the case I and ω_1, ω_3, ω_5, . . . in the case II. The eigenvalues can always be made to form a monotonic sequence

$$0 < \frac{\omega_0}{i} < \frac{\omega_1}{i} < \frac{\omega_2}{i} < \ldots$$

The associated eigenvalues C_n are according to equation (2.3)

$$C_n = \frac{\alpha^2 + \left(\frac{\omega_n}{i}\right)^2}{i\alpha R} \tag{2.5}$$

They are, therefore, arranged in the order of increasing damping. The nth eigenvalue may be estimated upward and downward by

$$\alpha^2 + \pi^2\left(\frac{n}{2} + \frac{1}{2}\right)^2 < i\alpha R \cdot C_n < \alpha^2 + \pi^2\left(\frac{n}{2} + 1\right)^2 \tag{2.6}$$

From the representation (2.5), it follows that the eigenvalues C become very large for $\alpha R \to 0$ as well as for $n \to \infty$. The same behavior occurs, also, for more general velocity profiles $U(y)$ because the main parts of the stability differential equation (1.2) are then represented

by the equation (2.1). We shall now express this train of thought more accurately by subjecting the difference $c - C$ of the eigenvalues c to a more accurate estimate compared to the eigenvalue C of equation (2.1), for more general profiles. With introduction of the differential operators

$$L[\varphi] = U(\varphi'' - \alpha^2\varphi) - U''\varphi \qquad M[\varphi] = \varphi'' - \alpha^2\varphi \qquad N[\varphi] = \varphi^{(4)} - 2\alpha^2\varphi'' + \alpha^4\varphi \tag{2.7}$$

the stability differential equation (1.2) may be written in the form

$$\left.\begin{aligned} &cM[\varphi] = L[\varphi] - \frac{1}{i\alpha R} N[\varphi]. \\ &\text{Correspondingly, equation (2.1) reads} \\ &CM[\Phi] = -\frac{1}{i\alpha R} N[\Phi]. \end{aligned}\right\} \tag{2.8}$$

Utilizing the fact that the operators M and N are self-adjoint, we obtain from these two equations the relationship

$$(c - C)\int_{-1}^{+1} \varphi M[\Phi]\,dy = \int_{-1}^{+1} \Phi L[\varphi]\,dy \tag{2.9}$$

If the normalization which is still open for φ is fixed by the rule

$$\int_{-1}^{+1} \varphi M[\Phi]\,dy = \int_{-1}^{+1} \Phi M[\Phi]\,dy \tag{2.10}$$

there follows, after introduction of the auxiliary quantities

$$Q = \frac{\int_{-1}^{+1} \Phi L[\Phi]\,dy}{\int_{-1}^{+1} \Phi M[\Phi]\,dy} \qquad q = \frac{\int_{-1}^{+1} \Phi L[\varphi - \Phi]\,dy}{\int_{-1}^{+1} \Phi M[\Phi]\,dy} \tag{2.11}$$

from equation (2.9) the representation

$$c - C = Q + q \tag{2.12}$$

In this equation, C and Q may be regarded as known by virtue of the functions Φ represented in equations (2.2). The eigenvalues C_n have already been delimited in expression (2.6). For Q we obtain directly the estimate

$$Q = \frac{1}{2} \int_{-1}^{+1} U \cdot dy + O\left(\frac{1}{\omega}\right) \qquad |\omega| \gg 1 \tag{2.13}$$

In connection with a simultaneous estimate of the function $(\varphi - \Phi)'' - \alpha^2(\varphi - \Phi)$, we obtain for q

$$q = O\left(\frac{i\alpha R}{\omega}\right) \quad \text{for} \quad \frac{\alpha R}{\omega} \to 0 \tag{2.14}$$

If we substitute both into equation (2.12), we obtain, with consideration of equation (2.5) and expression (2.6), the two partial statements

$$c_n - C_n = Q_n + O\left(\frac{\alpha R}{n + 1}\right) \qquad \text{for } \alpha R \to 0 \text{ and for arbitrary order } n \tag{2.15a}$$

$$c_n - C_n = \frac{1}{2}\int_{-1}^{+1} U \cdot dy + O\left(\frac{\alpha R}{n}\right) \quad \text{for } n \to \infty \text{ for fixed } \alpha R \tag{2.15b}$$

The latter estimate indicates that the eigenvalues c_n of the stability differential equation for sufficiently high order n finally tend toward the eigenvalues C_n of the "zero flow" (with the real part increased by the mean velocity of the basic flow). (Compare eq. (2.1).) A mutual coordination of the eigenvalues c_n to the eigenvalues C_n, however, is by virtue of equation (2.15b), meaningful only due to the fact that the difference $|C_n - C_{n+1}|$ of the approximation eigenvalues comes out considerably larger than the estimated remainder in equation (2.15b): For, because of (2.5) and (2.6)

$$\left| C_n - C_{n+1} \right| \geqq \text{constant} \cdot \left(\frac{n}{\alpha R}\right) \tag{2.16}$$

is valid. It should be mentioned that F. Noether (ref. 7, p. 239, formula (28)) has already indicated an asymptotic representation for slightly differently defined eigenvalues for unlimitedly increasing order, although only intimating an argument - which leads one to expect considerable difficulties.

We mention, furthermore, an estimate for the eigenvalues c indicated by C. S. Morawetz (ref. 6, p. 580)

$$\left| c - c_n \right| < \Delta \cdot (\alpha R)^{-1/2}$$

where c_n is an approximative eigenvalue which (in our notation) is determined by the equation

$$\operatorname{Im} \int_{-1}^{+1} \sqrt{i\left(U - c_n\right)} \cdot dy = \frac{n\pi}{\sqrt{\alpha R}}$$

and corresponds more or less to our approximate eigenvalue C_n introduced in equation (2.1). In the above estimate of Morawetz, neither αR nor n may become arbitrarily large; in the first case, the eigenvalues would shift into the excluded neighborhood of $c = w\left(y_1\right)\left(w = U;\ y_1\right.$ designates the wall$\left.\right)$; in the other case the estimate would become meaningless since the behavior of the quantity Δ for unlimitedly increasing n is not given.

3. RECTILINEAR COUETTE FLOW. THE LIMITING CASE $\alpha R \to \infty$ FOR FINITE ORDER n

In the special case of the basic flow at rest, $U = 0$, the behavior of the eigenvalues c_n for unlimitedly increasing αR is described by the formula (2.5) in which the quantities ω_n no longer depend on αR. In deviation from this law, there results for more general velocity profiles a behavior like

$$c_n - U(-1) \cong \frac{\Gamma_n}{\sqrt[3]{\alpha R}} \quad \text{for} \quad \alpha R \to \infty \tag{3.1}$$

where the complex valued quantities Γ_n no longer depend on αR. If these eigenvalues are adjoined to the eigenvalues in equation (2.15a), by continuous transition of α and αR, the ordering principle (1.4) according to increasing damping is lost even in special cases like the rectilinear Couette flow. If we therefore desire that the subscripts of the eigenvalues c_n remain unchanged for continuous transformation of the limiting cases $\alpha R \to 0$ and $\alpha R \to \infty$ into one another, we must actually carry out this procedure which presupposes a general solution of the eigenvalue problem or a solution which is approximate only insofar as the individual eigenvalues still remain distinguishable from one another. We succeeded in obtaining a solution in this sense only in the special case of the rectilinear Couette flow. It will, therefore, form the subject of the following section.

After insertion of the velocity profile $U = y$ of the rectilinear Couette flow into the stability differential equation (1.2), the latter can be reduced, by means of the substitution

$$\psi = \varphi'' - \alpha^2\varphi \tag{3.2}$$

to the Bessel differential equation in the auxiliary form

$$\psi'' - \left[i\alpha R(y - c) + \alpha^2\right]\psi = 0 \tag{3.3}$$

In order to arrive, through the boundary conditions, at the eigenvalues, we must invert equation (3.2) in the form

$$\varphi(y) = \int_{-1}^{y} \psi(\eta) \frac{\sinh \alpha(y - \eta)}{\alpha} d\eta \tag{3.4}$$

The boundary conditions $\varphi(-1) = \varphi'(-1) = 0$ then are identically satisfied; the remaining boundary conditions $\varphi(+1) = \varphi'(+1) = 0$ require that the two equations

$$\int_{-1}^{+1} \psi(y) \cdot \frac{\sinh \alpha y}{\alpha} dy = 0 \qquad \int_{-1}^{+1} \psi(y) \cosh \alpha y \, dy = 0 \tag{3.5}$$

hold.

By means of the substitution

$$y - y_k = \epsilon\eta \quad \text{with} \quad \epsilon = (\alpha R)^{-1/3} \quad \text{and} \quad y_k = c + \frac{i\alpha^2}{\alpha R} \tag{3.6}$$

the differential equation (3.3) may be transformed into the differential equation

$$i\,\frac{d^2\psi}{d\eta^2} + \eta\psi = 0 \tag{3.7}$$

If

$$\psi_I(\eta) \quad \text{and} \quad \psi_{II}(\eta) \tag{3.8}$$

are assumed to be two suitable fundamental solutions of this equation, and η_{-1}, η_{+1} is assumed to designate the values which are, because of equations (3.6), associated with the walls $y = -1$ and $y = +1$

$$\eta_{-1} = \frac{1}{\epsilon}\left(-1 - c - \frac{i\alpha^2}{\alpha R}\right) \qquad \eta_{+1} = \frac{1}{\epsilon}\left(1 - c - \frac{i\alpha^2}{\alpha R}\right) \tag{3.9}$$

there follows from equations (3.5) the eigenvalue equation

$$\int_{\eta_{-1}}^{\eta_{+1}} \psi_I(\eta)\,\frac{\sinh \alpha\epsilon\eta}{\alpha\epsilon}\,d\eta \cdot \int_{\eta_{-1}}^{\eta_{+1}} \psi_{II}(\eta)\cosh \alpha\epsilon\eta\,d\eta -$$

$$\int_{\eta_{-1}}^{\eta_{+1}} \psi_{II}(\eta)\,\frac{\sinh \alpha\epsilon\eta}{\alpha\epsilon}\,d\eta \cdot \int_{\eta_{-1}}^{\eta_{+1}} \psi_I(\eta)\cosh \alpha\epsilon\eta\,d\eta = 0 \tag{3.10}$$

For further treatment of this equation, the introduction of a sequence of functions $A_n(\eta)$ by the Laplace integral

$$A_n(\eta) = \frac{1}{2\pi i}\int_{\underline{A}} e^{\eta z + i\frac{z^2}{3}} \cdot z^{n-1} \cdot dz \tag{3.11}$$

is advisable in which the path of integration A runs from infinity to infinity in the manner drawn in figure 1. The functions $A_n(\eta)$ satisfy the differential formula

$$\frac{dA_n(\eta)}{d\eta} = A_{n+1}(\eta) \tag{3.12}$$

and the recursion formula

$$i \cdot A_{n+3} + \eta \cdot A_{n+1} + n \cdot A_n = 0 \tag{3.13}$$

by means of which all the functions $A_n(\eta)$ and their integrals and derivatives may be constructed recursively from the three basic functions

$$A_0(\eta) \qquad A_1(\eta) \qquad A_2(\eta) \tag{3.14}$$

The significance of these functions $A_n(\eta)$ for the stability problem lies in the fact that the two particular solutions of the differential equation (3.7) needed in the eigenvalue equation (3.10) can be represented in the form

$$\psi_I(\eta) = A_1(\eta) \qquad \psi_{II}(\eta) = e^{\frac{2\pi i}{3}} \cdot A_1\left(\eta \cdot e^{\frac{2\pi i}{3}}\right) \tag{3.15}$$

That the differential equation (3.7) is satisfied follows from the formulas (3.12) and (3.13). The linear independence of the two functions follows from the fact that the Wronski determinant, which is constant of course, does not disappear at the point $\eta = 0$.

The basic functions $A_1(\eta)$ and $A_2(\eta) = A_1'(\eta)$ have been numerically tabulated (in somewhat different notation) for a quadratic point grid with the mesh width 0.1 within the circle $|\eta| \leqq 6$ of the complex η-plane by H. H. Aiken (ref. 1). The basic function $A_0(\eta) = \int A_1(\eta)d\eta$ can be determined from it by a numerical integration.

Outside of this table, the behavior of the functions $A_n(\eta)$ may be inferred from the asymptotic series representation

$$A_n(\eta) \cong \eta^{\left(\frac{n}{2} - \frac{3}{4}\right)} \cdot e^{\frac{3}{4}(-i\eta)^{3/2}} \cdot \sum_{v=0} \frac{a_{n,v}}{\eta^{v/2}} \tag{3.16}$$

which is valid for $|\eta| \to \infty$ in the angle space $-\frac{7\pi}{6} + \delta \leqq \arg \eta \leqq \frac{5\pi}{6} - \delta$ with arbitrarily small $\delta > 0$. According to H. Holstein (ref. 4), the first coefficient of the series is

$$a_{n,0} = \frac{1}{2\sqrt{\pi}} e^{-i\pi\left(\frac{3n}{4}+\frac{1}{8}\right)} \tag{3.16a}$$

The asymptotic series are obtainable directly from the Laplace integral (3.11) by means of Riemann's saddle-point method.

For the representation of the eigenvalues, the zeros η_N of the function $A_0(\eta)$ are necessary. An asymptotic calculation of these zeros for $|\eta_N| \gg 1$ is not possible directly by means of expression (3.16), since the zeros would move out of the range of validity of this representation. We avoid this difficulty by applying the second relations obtainable from the integral (3.11)

$$A_n\left(\eta e^{-i\frac{\pi}{6}}\right) = e^{\frac{i\pi n}{3}} \cdot A_n^*\left(\eta^* \cdot e^{-\frac{i\pi}{6}}\right) \tag{3.17}$$

(* = conjugate-complex values)

and

$$A_n(\eta) + e^{i\frac{2\pi n}{3}} A_n\left(\eta e^{i\frac{2\pi}{3}}\right) + e^{i\frac{4\pi n}{3}} A_n\left(\eta e^{i\frac{4\pi}{3}}\right) = P_n(\eta) \tag{3.18}$$

where the polynomials $P_n(\eta)$ of the degree $-n$ satisfy the same recursion formula (3.13)

$$i \cdot P_{n+3} + \eta P_{n+1} + nP_n = 0 \tag{3.19}$$

with the initial elements

$$P_0 = 1 \qquad P_1 = 0 \qquad P_2 = 0$$

Combination of formulas (3.16) and (3.18) then yields the asymptotic representation valid for $|z| \to \infty$ in the angle space $|\arg z| < \pi - \delta$

$$A_0\left(ze^{i\frac{5\pi}{6}}\right) \cong 1 - \frac{\cos\left(\frac{2}{3}z^{3/2} + \frac{\pi}{4}\right)}{\sqrt{\pi}\cdot z^{3/4}} \tag{3.20}$$

Hence, there follows, for the zeros η_N of $\overline{A_0(\eta_N)} = 0$ which, according to equation (3.17), lie in pairs symmetrically with respect to the straight line $\arg = 5\pi/6$, the asymptotic representation

$$\eta_N \cong (3\pi n)^{2/3} \cdot e^{i\left[\frac{5\pi}{6} \pm \frac{\ln\left(n\cdot 2\pi\sqrt{3}\right)}{3\pi n}\right]} \qquad n = 1, 2, 3 \ldots\ldots \tag{3.21}$$

The value of the lowest pair of zeros was calculated to be

$$\eta_N = 4.257 \cdot e^{i\left[\frac{5\pi}{6} \pm 0.2708\right]} \tag{3.21a}$$

according to the table of Aiken (ref. 1).

For further treatment of the eigenvalue equation (3.10), it is advisable to expand the functions $\sinh \alpha\epsilon\eta$ and $\cosh \alpha\epsilon\eta$ into their Taylor series, and then to interchange the summation with integration which is justified by a theorem of Bromwich. (Compare ref. 2, p. 398.) The series obtained converge, according to theorems of the Laplace transformation, for each value of $\alpha\epsilon$. If these series are broken off after the first terms, provided with residual terms, and substituted into the eigenvalue equation (3.10), the latter is, for this reason, and with consideration of equation (3.17), simplified to

$$\begin{vmatrix} A_0(\eta_1) - A_0(\eta_{-1}) & A_0^*(-\eta_1^*) - A_0^*(-\eta_{-1}^*) \\ A_2(\eta_1) - A_2(\eta_{-1}) & A_2^*(-\eta_1^*) - A_2^*(-\eta_{-1}^*) \end{vmatrix} = O\left(\alpha^2\epsilon^2\right) \quad \text{for} \quad |\eta_1| \leqq \text{constant} \tag{3.24}$$

What happens now when αR increases beyond all limits, that is, when ϵ tends toward 0? Because of the relationship following from equation (3.9), $\eta_1 - \eta_{-1} = 2/\epsilon$, at least one of the two quantities η_1, η_{-1} must tend toward infinity for $\epsilon \to 0$, on a parallel to the real axis. It is sufficient to assume this regarding η_1, because in the other case everything would form a mirror image with respect to the imaginary axis of the η-plane (as essentially occurs in the Couette flow

where with C, also, $-C^*$ is an eigenvalue). With consideration of the asymptotic behavior (eq. (3.16)), the eigenvalue equation (3.24) then is simplified to

$$i\,\frac{A_0(\eta_{-1})}{A_2(\eta_{-1})} - \frac{\epsilon}{2} = O\left(\epsilon^2\right) \quad \text{for} \quad \epsilon \ll 1 \tag{3.25}$$

From this formula, we recognize that η_{-1} for $\epsilon \to 0$ must tend toward the zeros η_N of the function $A_0(\eta)$ estimated in expressions (3.21). We thus obtain for the eigenvalues c, with consideration of equations (3.9), the asymptotic representation

$$\begin{gathered} c + 1 \cong -\epsilon\eta_N + O\left(\epsilon^2\right) \\ \text{with} \quad \eta_N \quad \text{from} \quad A_0\left(\eta_N\right) = 0 \end{gathered} \tag{3.26}$$

Thus we have proved the previously given eigenvalue formula (3.1) for the special case of the Couette flow.

In order to follow the variation of the eigenvalues c over the entire range $0 \leqq \alpha R < \infty$, we must go back to the eigenvalue equation (3.10) or its approximate form in equation (3.24), with the functions $A_0(\eta)$, $A_1(\eta)$, $A_2(\eta)$ to be assumed as known. We have accordingly calculated the 12 lowest eigenvalues c as functions of αR for a fixed value $\alpha = 1$ and represented them in figure 2. The variability of the eigenvalue curves with α is only slight and becomes, for instance, for $\alpha R \to \infty$ with ϵ small of the order $O(\alpha^2\epsilon^2)$.

The eigenvalue spectrum of the rectilinear Couette flow has been discussed already by L. Hopf (ref. 5). Hopf replaced, more or less on the level of our eigenvalue equation (3.10), the solutions ψ_I, ψ_{II} represented by him by Hankel functions of the order 1/3 - by the first terms of their asymptotic series (3.16), whereby the eigenvalue equation was simplified to an algebraic equation of auxiliary arguments and circular and hyperbolic functions. However, since Hopf committed certain errors in the asymptotic representations of the Hankel functions, his results require partial corrections. Although these changes are hardly significant for small values of αR, the values of, for instance, η_N in a formula corresponding to (3.26) undergo a considerable change. The topological connection of the eigenvalue curves $c = c(\alpha,\alpha R)$ also appears different to us from what it appeared to Hopf. However, the

qualitative picture of the eigenfunctions, the physical conclusions drawn from it, and the main result - that all oscillations are damped - remain the same.

4. THE LIMITING CASE $\alpha R \to \infty$ FOR FINITE ORDER n FOR SYMMETRICAL BASIC FLOWS

For a basic flow with symmetrical velocity profile

$$U(y) = U(-y) \tag{4.1}$$

the stability differential equation (1.2) always has a fundamental system of four solutions $\tilde{\varphi}_1$, $\tilde{\varphi}_2$, $\tilde{\varphi}_3$, $\tilde{\varphi}_4$ so that

$$\left.\begin{array}{ll} \tilde{\varphi}_2(y) \quad \tilde{\varphi}_4(y) & \text{are even functions of } y \\ \text{and} & \\ \tilde{\varphi}_1(y) \quad \tilde{\varphi}_3(y) & \text{are odd functions of } y \end{array}\right\} \tag{4.2}$$

If a linear combination of these solutions is to satisfy the boundary conditions of equations (1.3) in the sequence $\varphi(-1) = 0$, $\varphi'(-1) = 0$, $\varphi(+1) = 0$, $\varphi'(+1) = 0$, the following determinant, simplified with consideration of the symmetries (4.2), must disappear:

$$D = \begin{vmatrix} \tilde{\varphi}_1(-1) & \tilde{\varphi}_3(-1) & \tilde{\varphi}_2(-1) & \tilde{\varphi}_4(-1) \\ \tilde{\varphi}_1'(-1) & \tilde{\varphi}_3'(-1) & \tilde{\varphi}_2'(-1) & \tilde{\varphi}_4'(-1) \\ -\tilde{\varphi}_1(-1) & -\tilde{\varphi}_3(-1) & \tilde{\varphi}_2(-1) & \tilde{\varphi}_4(-1) \\ \tilde{\varphi}_1'(-1) & \tilde{\varphi}_3'(-1) & -\tilde{\varphi}_2'(-1) & -\tilde{\varphi}_4'(-1) \end{vmatrix} = 0$$

Since this determinant may be written as the product of the two-column determinants

$$-\frac{D}{4} = \begin{vmatrix} \tilde{\varphi}_1(-1) & \tilde{\varphi}_3(-1) \\ \tilde{\varphi}_1'(-1) & \tilde{\varphi}_3'(-1) \end{vmatrix} \cdot \begin{vmatrix} \tilde{\varphi}_2(-1) & \tilde{\varphi}_4(-1) \\ \tilde{\varphi}_2'(-1) & \tilde{\varphi}_4'(-1) \end{vmatrix} = 0 \tag{4.3}$$

one obtains, by equating one of the two factors to zero, one branch of the eigenvalue equation each time. For this reason the eigenfunctions can be either only even or only odd, with the respective eigenvalues $\bar{c}$ generally being different.

In order to arrive from these equations at asymptotic eigenvalue formulas, we shall determine the four fundamental solutions (4.2) $\tilde{\varphi}_1 \ldots \tilde{\varphi}_4$ in such a manner that they are available for appropriate asymptotic expansions. We find that the fundamental solutions described by W. Tollmien (ref. 12), "Asymptotic Integration of the Stability Differential Equation", the asymptotic representations of which are provided with residual-term estimates, are suited to the problem.

In order to establish the connection of these fundamental solutions with ours, it is indispensable to discuss first the concept of "frictionless approximation." The quest for solutions of the complete stability differential equation (1.2) which for $\alpha R \to \infty$, together with their derivatives with respect to y, tend toward a limiting function

$$\lim_{\alpha R \to \infty} \varphi(y,\alpha R) = \chi(y) \tag{4.4}$$

leads to the so-called "frictionless differential equation"

$$(U - c)(\chi'' - \alpha^2\chi) - U''\chi = 0 \tag{4.5}$$

which must necessarily be satisfied by such limiting functions. If we want to use the solutions of this frictionless differential equation for the approximation of the solutions of the complete differential equation for $\alpha R \to \infty$, we must not disregard the range of validity of the boundary-value statements in equation (4.4) in the complex y-plane. According to W. Wasow (ref. 13), the following theorem is valid with respect to this:

"Of the four fundamental solutions (4.2), one even and one odd solution can be determined in each case so that with two appropriate frictionless solutions $\tilde{\chi}_1(y)$ and $\tilde{\chi}_2(y)$ the approximations

$$\left.\begin{aligned} \varphi_1(y) &= \tilde{\chi}_1(y) + O\left(\frac{1}{\alpha R}\right) \qquad & \chi_1(y) &= \text{odd function of } y \\ \varphi_2(y) &= \tilde{\chi}_2(y) + O\left(\frac{1}{\alpha R}\right) \qquad & \tilde{\chi}_2(y) &= \text{even function of } y \end{aligned}\right\} \tag{4.6}$$

in each fixed interior of a double region (I + II) or (II + III) or (III + I) are valid and become invalid, in each case, in the complementary third region III or I or II. The same is true for the derivatives with respect to y." (Compare fig. 3.)

The boundaries between the regions I, II, and III satisfy the equation

$$\mathrm{Re}\left[\sqrt{i}\cdot\int_{y_k}^{y}\sqrt{U-c}\,dy\right]=0$$

if y_k denotes the "critical point" defined by

$$U\left(y_k\right)=c \qquad \mathrm{Re}\ y_k<0 \tag{4.7}$$

For more details regarding the regions I, II, and III see Wasow (ref. 13).

The frictionless differential equation (4.5) has at the critical point, $U\left(y_k\right)=c$, a singular point with regard to determinateness. Two fundamental solutions take the form

$$\begin{aligned} x_1(y) &= \left(y-y_k\right)\cdot \underline{P}_1\left(y-y_k\right) \\ x_2(y) &= \underline{P}(y-y_k)+\frac{U_k''}{U_k'}\underline{P}_1(y-y_k)\cdot(y-y_k)\ln(y-y_k) \end{aligned} \tag{4.9}$$

if $\underline{P}_1$ and $\underline{P}_2$ denote power series with the beginning

$$\underline{P}_1(z)=1+z\cdot\frac{U_k''}{2U_k'}+O\left(z^2\right) \qquad \underline{P}_2(z)=1+O\left(z^2\right) \tag{4.9a}$$

(Compare W. Tollmien, ref. 12, p. 35.) The common radius of convergence of these power series is limited either by the radius of convergence of a corresponding series for $U-c$ or by the next-adjacent zero of $U-c$ as a singular point of the differential equation.

For the further development it is advisable to introduce a sequence of functions $B_n(\eta)$ by the Laplace integral

$$B_n(\eta) = \frac{1}{2\pi i} \int_{\underline{B}} e^{\eta z + i\frac{z^3}{3}} \cdot z^{n-1}(\ln z + \hat{c})dz \tag{4.10}$$

which is comparable to equation (3.11). In it, $\hat{c} = 0.5772 \ldots$ denotes the Euler constant. The path of integration $\underline{B}$ runs, in the manner indicated in figure 4, in the complex z-plane cut open along $(0,-i\infty)$ from infinity to infinity.

The functions $B_n(\eta)$ satisfy the differential formula

$$\frac{dB_n(\eta)}{d\eta} = B_{n+1}(\eta) \tag{4.11}$$

and the recursion formula

$$i \cdot B_{n+3} + \eta \cdot B_{n+1} + n \cdot B_n = P_n \tag{4.12}$$

in which $P_n(\eta)$ are the polynomials defined in equation (3.19).

By means of these two formulas all the functions $B_n(\eta)$ and their derivatives and integrals can be constructed recursively from the three basic functions

$$B_0(\eta) \qquad B_1(\eta) \qquad B_2(\eta) \tag{4.13}$$

By means of the representation

$$\underset{(n=1,2)}{B_n(\eta)} = 2\pi i \begin{vmatrix} A_0(\eta) & A_0^*(-\eta^*) \\ A_n(\eta) & (-1)^n A_n^*(-\eta^*) \end{vmatrix} \tag{4.13a}$$

(* = conjugate-complex value), the basic functions B_1 and B_2 can be reduced to the functions A_n. (Compare W. Tollmien, ref. 10, p. 27.)

The significance of the functions $B_n(\eta)$ for our stability - eigenvalue problem lies in the fact that the function $B_1(\eta)$, because of equations (4.11) and (4.12), satisfies the differential equation

$$i \frac{d^4B_1}{d\eta^4} + \eta \frac{d^2B_1}{d\eta^2} = 1 \tag{4.14}$$

which, with the designation "differential equation for the friction correction," has been introduced as an essential constituent into the asymptotic integration of the stability differential equation by W. Tollmien (refs. 10 and 12).

After these preparations, we turn to the four fundamental solutions φ_I, φ_{II}, φ_{III}, φ_{IV} of the complete stability differential equation constructed by Tollmien, regarding its ability to be expanded asymptotically. According to W. Tollmien (ref. 12, p. 77) these four solutions may be determined, with use of the substitution

$$y - y_k = \epsilon\eta \quad \text{with} \quad \epsilon = \left(\alpha R U_k'\right)^{-1/3} \text{ and } y_k \text{ from } U\left(y_k\right) = c \tag{4.16}$$

in such a manner that they have in a fixed interior of the η-plane (complex for reasons of analytic continuation) as well as in every fixed interior of the region II of the frictionless approximation (compare eq. (4.6a)) the following asymptotic representations:

$$\varphi_I(y) = \chi_1(y) + O\left(\epsilon^3\right) \tag{4.17a}$$

$$\left.\begin{aligned} \varphi_{II}(y) &= \underline{P}_2(\epsilon\eta) + \frac{U_k''}{U_k'} \cdot \underline{P}_1(\epsilon\eta) \cdot \epsilon\left[B_{-1}(\eta) + \eta + \eta \ln \epsilon\right] + O\left(\epsilon^2 \ln \epsilon\right) \\ &\text{or in every fixed interior of II} \\ \varphi_{II}(y) &= \chi_2(y) + O\left(\epsilon^3\right) \end{aligned}\right\} \tag{4.17b}$$

Furthermore,

$$\varphi_{III}(y) = A_{-1}(\eta) + O(\epsilon) \quad \text{in} \quad |\eta| \leqq \text{constant} \tag{4.17c}$$

is valid. Finally, there applies, according to W. Wasow (ref. 13), quotient-asymptotically in every fixed interior of II (compare eqs. (4.6))

$$\varphi_{III}(y), \quad \varphi_{IV}(y) \approx \text{constant} \cdot \left(\frac{\epsilon}{U - c}\right)^{5/4} \cdot \exp\left[\sqrt{i\alpha R} \cdot \int_{y_k}^{y} \sqrt{U - c}\, dy\right] \tag{4.17d}$$

Corresponding formulas are valid for the derivatives.

For further treatment of the eigenvalue equation (4.3), we must express the fundamental solutions $\tilde{\varphi}_1 \ldots \tilde{\varphi}_4$ used in it by the above fundamental solutions $\varphi_I \ldots \varphi_{IV}$. If for the latter, the representations (4.17) are used immediately, and with the residual terms in each circle $|\eta| \leqq \text{constant}$ for $\epsilon \to 0$ being valid, the result reads

$$\left.\begin{aligned} \tilde{\varphi}_{1,2}(y) - \vartheta_{1,2}\varphi_{III}(y) &= 1 + \epsilon \cdot \frac{U_k''}{U_k'}\left[\eta\left(\ln \epsilon + 1 + S_{1,2}\right) + B_{-1}(\eta)\right] + O\left(\epsilon^2 \ln \epsilon\right) \\ \text{with} \quad \frac{U_k''}{U_k'} S_1 &= -\frac{\chi_2(0)}{\chi_1(0)} \qquad \frac{U_k''}{U_k'} S_2 = -\frac{\chi_2'(0)}{\chi_1'(0)} \end{aligned}\right\} \tag{4.21a}$$

from the frictionless solutions χ_1 and χ_2. (Compare eqs. (4.9)) Furthermore,

$$\tilde{\varphi}_{3,4}(y) = \varphi_{III}(y) + O\left(\epsilon^{5/4} \cdot e^{-\frac{\text{constant}}{\epsilon\sqrt{\epsilon}}}\right) = A_{-1}(\eta) + O(\epsilon) \tag{4.21b}$$

is valid. Corresponding formulas are valid for the derivatives.

If we now write the two eigenvalue equations obtained in equation (4.3) as a product of three factors, for instance,

$$0 = D = \left[\tilde{\varphi}_3(-1)\right]\left[\tilde{\varphi}_1(-1) - \vartheta \cdot \tilde{\varphi}_3(-1)\right]\left[\frac{\tilde{\varphi}_3'(-1)}{\tilde{\varphi}_3(-1)} - \frac{\tilde{\varphi}_1'(-1) - \vartheta\tilde{\varphi}_3'(-1)}{\tilde{\varphi}_1(-1) - \vartheta\tilde{\varphi}_3(-1)}\right]$$

(ϑ = arbitrary constant), the zeros of the two first factors do not make a contribution to the eigenvalue configuration since they are compensated by corresponding poles of the third factor - unless the derivative $\varphi_3'(-1)$ should disappear simultaneously. It is therefore sufficient to find only the zeros of the third factor. After insertion of the approximations (4.21) we thus obtain

$$\frac{1}{\varphi_{III}}\frac{d\varphi_{III}}{d\eta} = \frac{\epsilon \cdot \frac{U_k''}{U_k'}\left[\ln \epsilon + 1 + S_{1,2} + B_0(\eta)\right]}{1 + \epsilon \cdot \frac{U_k''}{U_k'}\left[\eta\left(\ln \epsilon + 1 + S_{1,2}\right) + B_{-1}(\eta)\right]} + O\left(\epsilon^2 \ln \epsilon\right) \qquad \left(\eta = \eta_{-1}\right)$$

or

$$\frac{A_0(\eta)}{A_{-1}(\eta)} + \epsilon\psi(\eta) = \frac{\epsilon \cdot \frac{U_k''}{U_k'}\left[\ln \epsilon + 1 + S_{1,2} + B_0(\eta)\right]}{1 + \epsilon \frac{U_k''}{U_k'}\left[\eta\left(\ln \epsilon + 1 + S_{1,2}\right) + B_{-1}(\eta)\right]} + O\left(\epsilon^2 \ln \epsilon\right) \tag{4.22}$$

with $\eta = \eta_{-1} = \left(-1 - y_k\right)/\epsilon$ and S_1, S_2 according to equations (4.21a) from the frictionless solutions. The function $\psi(\eta)$ stemming from a next-higher approximation in equation (4.21b) reads

$$\psi(\eta) = \frac{U_k''}{U_k'}\frac{d}{d\eta}\left\{\frac{A_{-2}(\eta) + \frac{1}{2}A_1(\eta) - \frac{1}{10}A_4(\eta)}{A_{-1}(\eta)}\right\} \tag{4.22a}$$

and may be reduced, by means of the formulas (3.12) and (3.13), to the three tabulated basic functions A_0, A_1, A_2.

How do the eigenvalues c behave if in the eigenvalue equation (4.22) we let $\alpha R \to \infty$, that is $\epsilon \to 0$? Evidently η_{-1} then tends toward the zeros η_N of the function $A_0(\eta)$. By Taylor series expanded about these zeros, there follows more exactly

$$\eta_{-1} = \eta_N + \frac{U_k''}{U_k'} \cdot i\,\frac{A_2(\eta_N)}{A_1(\eta_N)} \cdot \epsilon \ln \epsilon + O(\epsilon)$$

The eigenvalues then behave asymptotically like

$$c - U(-1) = -U_k' \cdot \epsilon\eta_N - \frac{U_k''}{U_k'} \cdot i \frac{A_2(\eta_N)}{A_1(\eta_N)} \epsilon^2 \ln \epsilon + O\left(\epsilon^2\right) \qquad (4.23)$$

with η_N from $A_0(\eta_N) = 0$. As a supplement to equations (3.21) we shall give here a few zeros η_N and values iA_2/A_1:

η_N	$iA_2(\eta_N)/A_1(\eta_N)$	
$-4.122 + i \cdot 1.065$	$-1.686 - i \cdot 1.222$	For $\lvert\eta_N\rvert \gg 1$
$-2.983 + i \cdot 3.037$	$+1.902 + i \cdot 0.851$	there applies
$-6.8 + i \cdot 2.5$	$-2.2 - i \cdot 1.5$	$i \dfrac{A_2(\eta_N)}{A_1(\eta_N)} \approx \sqrt{\dfrac{\eta_N}{i}}$
$-5.5 + i \cdot 4.5$	$+2.4 + i \cdot 1.14$	

(4.24)

The remarkable fact about the asymptotic eigenvalue formula (4.23) is that it is transformed into the corresponding formula (3.26) after substitution of the velocity profile $U = y$ of the Couette flow, although the two formulas were derived under completely different assumptions.

The asymptotic eigenvalue formula (4.23) is already so greatly reduced that it no longer permits a distinction of the eigenvalues c which are associated with even or odd eigen functions. For this, we must go back to the more exact formula (4.22) in which the characteristics "even" or "odd" of the eigenfunctions are taken into consideration by means of the constants S_1 and S_2, to be determined "without friction."

We have used the eigenvalue equation in the form (4.22) also for the numerical calculation of the eigenvalues c in the examples treated. We selected as examples the two-dimensional Poiseuille flow and a flow with an inflection-point profile. We represented the variation of the four lowest eigenvalues as functions of R for a fixed value of α in figures 5 and 6. The numerical calculation itself is - after reduction of the nonalgebraic elements contained in the eigenvalue equation to the three tabulated basic functions A_0, A_1, A_2 and to the frictionless solutions - a problem involving numerical methods, the details of which cannot be discussed here. We shall mention only the following approximate representation of the frictionless constant S_2.

$$\frac{U_k''}{U_k'} \cdot S_2 = A \cdot \alpha^{-2} + O(1) \quad \text{for} \quad \alpha \ll 1 \quad \text{with} \quad A = \frac{\left(U_k'\right)^2}{\int_{-1}^{0} (U - c)^2 dy} \tag{4.25}$$

(Compare W. Tollmien, ref. 11, p. 100), which may be applied advantageously for small values of α.

The subscripts for the eigenvalues c obtained from equation (4.22), in the sense of a continuous connection with the limiting case $\alpha R \to 0$, remain an open problem here. In the range of validity of equation (4.22) alone, a generally valid choice of subscripts according to the rule $\mathrm{Im}(c_{n+1}) \leqq \mathrm{Im}(c_n)$, that is, according to increasing damping, cannot in principle be carried out, either. The zeros in equation (4.23) can be ordered according to the increasing imaginary part, but the $\mathrm{Im}(c_n)$ curves may penetrate one another if ϵ is changed.

5. THE FRICTIONLESS EIGENVALUES WITHIN THE LIMITING CASE $\alpha R \to \infty$

Determination of the Excited Eigenvalues

Let the approximation (4.6) by means of the frictionless solutions be suited either to the double region I + II (compare fig. 3) or to the double region II + III whereby the logarithmic term is always uniquely determined in the frictionless solutions. Applying the approximations (4.17), we then obtain, by way of the eigenvalue equations (4.3), eigenvalues c which, for $\alpha R \to \infty$, tend toward the so-called "frictionless eigen values" $c^{(0)}(\alpha)$ which are defined by the boundary condition $\tilde{\chi}_1(-1) = 0$ or $\tilde{\chi}_2(-1) = 0$ of the odd or even frictionless solutions $\tilde{\chi}_1$, $\tilde{\chi}_2$. The following general statements may be made regarding these frictionless eigenvalues, limited by the range of validity of the boundary-value expressions (4.6), according to W. Tollmien (ref. 11), partly on the basis of the "Rayleigh-Tollmien theorems:"

"For velocity profiles without turning points, no excited frictionless eigenvalues are possible. The approximation (4.6), associated with the damped frictionless eigenvalues, must always take place in the interior of the double region I + II."

"For inflection-point profiles, there always exist excited frictionless eigenvalues associated with an even eigenfunction."

Beyond these general statements, frictionless eigenvalues associated with an odd eigenfunction were not found in any of the examples; neither did we find eigenvalues such that the associated approximation (4.6) would have taken place in the interior of the double region II + III. As examples, we chose the two-dimensional Poiseuille flow as representative of a profile without an inflection point, and the inflection-point profile $U = \left(\sqrt{2} - 1\right) + \left(2 - \sqrt{2}\right) \times \cos \frac{3\pi}{4} y$. The frictionless eigenvalues c, found only associated with an even eigenfunction, are represented in figures 7 and 8. The range of existence of these eigenvalues is always given by an interval $0 \leqq \alpha \leqq$ constant. For the frictionless eigenvalue c, Tollmien (ref. 11, p. 100) has set up the following approximate formulas:

$$\alpha = \alpha\left(c_r\right) = \frac{c_r U'(-1)}{\int_0^1 \left(U - c_r\right)^2 dy} \qquad c_i = c_i\left(c_r\right) = c_r^2 \cdot \frac{\pi U_K''}{\left(U_K'\right)^2} \quad \text{with} \quad U\left(y_K\right) = c_r \tag{5.1}$$

We now seek the connection between the frictionless eigenvalues and those discussed up till now. The closed solution, in the case of the Couette flow, cannot give an answer to this problem because the frictionless eigenvalues in question do not exist there at all. However, it is possible to insert the frictionless eigenvalues into the equation (4.22) and thus to interpret them as a limiting case within the eigenvalues (eq. (4.23)).

Let us, therefore, perform on the eigenvalue equation (4.22) the limiting process $\alpha R \to \infty$, that is, $\epsilon \to 0$ for constant $\left(-1 - y_k\right) = \epsilon\eta_{-1}$; the justification of this procedure is based on the equation preceding (4.22). By means of the asymptotic formulas (3.16) there then follows for $\alpha R \to \infty$

$$1 + \left(-1 - y_k\right) \frac{U_k''}{U_k'} \left\{\ln\left(-1 - y_k\right) + S_{1,2}\right\} = 0$$

These are, however, precisely the first Taylor terms of the frictionless eigenvalue equation $\chi_1(-1) = 0$ or $\chi_2(-1) = 0$ which would be obtained, according to the significance (equation (4.21a)) of S_1, S_2, in the case of Taylor expansion in the sense of the series (4.9).

On the basis of this finding, the determination of the excited eigenvalues ($\mathrm{Im}\,c > 0$) can be simplified. Since, according to the results of the second section, excited eigenvalues can appear only within the first eigenvalues of finite number and for sufficiently large values of R, it suffices to examine equation (4.22) with respect to excited eigenvalues. For this, the following alternative is valid: Excited eigenvalues can be (approximately) determined either by the frictionless boundary-value problem in combination with sufficiently large values of R, or they lie in a neighborhood of $c = U(-1)$ and can be determined by means of one of the equations (4.22) or (4.23) as associated with finite values of η_{-1}.

As follows from this for sufficiently large values of R, but as was confirmed in the examples for the smaller values of R also, the greatest excitation for inflection-point profiles is always combined with the frictionless eigenvalue or its continuation toward smaller R values. Hence, there follows the well-known fact that, in the case of turning-point profiles, the stability behavior may be concluded even from the frictionless differential equation alone. Let us compare to this the calculation of the frictionless eigenvalues of G. Rosenbrook (ref. 9) for an inflection-point profile which he had measured in a divergent channel.

6. FORM OF THE EIGENFUNCTION. THE INNER FRICTION LAYER. THE VARIATION OF A DISTURBANCE WITH TIME.

In order to judge the variation with time of a disturbance, we shall decompose the latter into partial waves of the type in equation (1.1). It is then necessary to know the variation of the amplitude $\varphi(y)$ over the channel width. We consider here only the case of very large values of αR.

For the Couette flow, there follows, by equation (3.4), in the notation of equations (3.6), (3.9), and (3.15) for $\epsilon \ll 1$, that is, $\alpha R \gg 1$, as approximate expression for the eigenfunction

$$\varphi(y) = F(\eta) - F\left(\eta e^{\frac{2\pi i}{3}}\right) \tag{6.1}$$

with

$$F(\eta) = \frac{A_{-1}(\eta) - A_{-1}(\eta_{-1})}{A_{-1}(\eta_1) - A_{-1}(\eta_{-1})} \tag{6.2}$$

The boundary conditions $\varphi(\pm 1) = 0$ are identically satisfied; the remaining boundary conditions are identical with the eigenvalue equation (3.24). As follows even from the differential equation alone, $\varphi^*(-y)$ is an eigenfunction associated with the eigenvalue $-c^*$. We calculated accordingly for $\alpha = 1$ and $R = 10^3$ the eigenfunction associated with the eigenvalue $c = -0.7 - i0.3$ and represented it in figure 9.

It is striking in this figure that the essential changes of the eigenfunction occur in a layer $-1 \leqq y \leqq y_0$ which could be defined perhaps by the angle space $\arg \eta \leqq \pi/6$ of the strong increase of $A_{-1}(\eta)$. In the variable y this "inner friction layer" is, according to equations (3.6) and (3.26), approximately

$$-1 \leqq y \leqq -1 + \epsilon\left(-\mathrm{Re}\ \eta_N + \sqrt{3}\ \mathrm{Im}\ \eta_N\right) \qquad \epsilon \ll 1 \tag{6.3}$$

This representation shows that the width of the layer increases with growing order n of the eigenfunctions; the magnitude of damping increasing simultaneously. The velocity of the associated disturbance wave is approximately equal to the velocity of the basic flow in the center of the layer. Furthermore, the thickness of the layer tends with ϵ toward zero. The physical interpretation of this situation signifies according to Hopf (ref. 5, p. 57) "that any arbitrary disturbance for large values of R is damped in such a manner that, finally, disturbances seem to emanate only from the walls, without mutual interference - a behavior which reminds one of frictionless fluids."

For more general basic flows, Tollmien (ref. 12) set up an approximate expression for the eigenfunction; in it, one can recognize again, in the case of damping, an "inner friction layer" which would have to be defined by the angle space $\pi/6 \leqq \arg \eta \leqq 5\pi/6$ of the great changes in increase of $B_{-1}(\eta)$ or $A_{-1}(\eta)$. In the variable y, this layer is, according to equations (4.16),

$$-1 + \frac{c_r + \sqrt{3}c_i}{U'(-1)} \leqq y \leqq -1 + \frac{c_r - \sqrt{3}c_i}{U'(-1)} \qquad \epsilon \to 0 \tag{6.9}$$

whence we obtain for the higher eigenvalues, according to equation (4.23), again the formula (6.3) for the Couette flow. If, however, frictionless damped eigenvalues c in the sense of section 5 exist, the inner friction layer, expression (6.9), retains also for the limiting process $\epsilon \to 0$ a finite thickness and a finite distance from the wall. We calculated, for this latter case, the even eigenfunction in the example of the Poiseuille flow, for $\alpha = 1$ and $R = 7.7 \times 10^5$, and represented it

in figure 10. The eigenvalue $c = 0.178 - i \times 0.049$ hardly deviates from the frictionless eigenvalue associated with $\alpha = 1$.

Comparing the inner friction layer with the boundary layer, we may say that the boundary layer represents that flow region in which the behavior of the laminar basic flow is decisively influenced by the inner friction, whereas the inner friction layer indicates the region where the disturbance is decisively subject to the influence of the friction, since outside this layer the disturbance can be determined without friction.

Translated by Mary L. Mahler
National Advisory Committee
for Aeronautics

REFERENCES

1. Aiken, H. H.: Tables of the Modified Hankel Functions of Order One-Third and of Their Derivatives. Harvard University Press, Cambridge, Mass., 1945.

2. Doetsch, G.: Theorie und Anwendung der Laplace-Transformation. (Berlin), 1937.

3. Haupt, O.: Über die Entwicklung einer wilkürlichen Funktion nach den Eigenfunktionen des Turbulenz-problems. Sitzber. d. Münchener Akad., Mathem. phys. Kl. 1912.

4. Holstein, H.: Über die äußere und innere Reibungschicht bei Störungen laminarer Strömungen. Z. angew. Math. Mech. 1950, pp. 25-49.

5. Hopf, L.: Der Verlauf kleiner Schwingungen auf einer Strömung reibender Flüssigkeit. Ann. d. Phys. 1914, pp. 1-60.

6. Morawetz, G. S.: The Eigenvalues of Some Stability Problems Involving Viscosity. Journ. of Ration. Mechan. and Analysis. Vol. 1, 1952, pp. 579-603.

7. Noether, F.: Zur Asymptotischen Behandlung der stationären Lösungen im Turbulenzproblem. Z. angew. Math. Mech., 1926, pp. 232-243.

8. Lord Rayleigh: Scient. Papers III, pp. 575-584.

9. Rosenbrook, G.: Instabilität der Gleitschicht im schwach divergenten Kanal. Z. angew. Math. Mech., 1937, pp. 8-24.

10. Tollmien, W.: Über die Entstehung der Turbulenz. Nachr. d. Ges. d. Wissensch., Göttingen 1929.

11. Tollmien, W.: Ein allgemeines Kriterium der Instabilität laminarer Geschwindigkeitsverteilungen. Nachr. d. Ges. d. Wissensch. Göttingen 1935.

12. Tollmien, W.: Asymptotische Integration der Störungsdifferentialgleichung ebener laminarer Strömungen bei hohen Reynoldsschen Zahlen. Z. angew. Math. Mech. 1947, pp. 37-50 and 70-83.

13. Wasow, W.: The Complex Asymptotic Theorie of a Fourth Order Differential Equation of Hydrodynamics. Ann. of Math. 49, 1948, pp. 852-871.

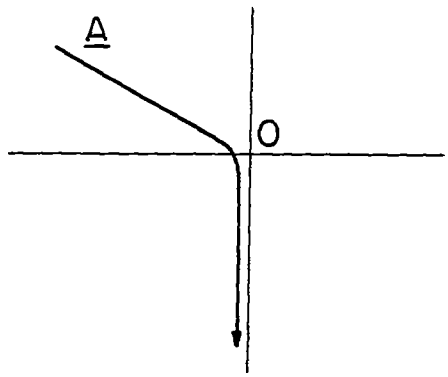

Figure 1.- Path of integration A in the complex z-plane.

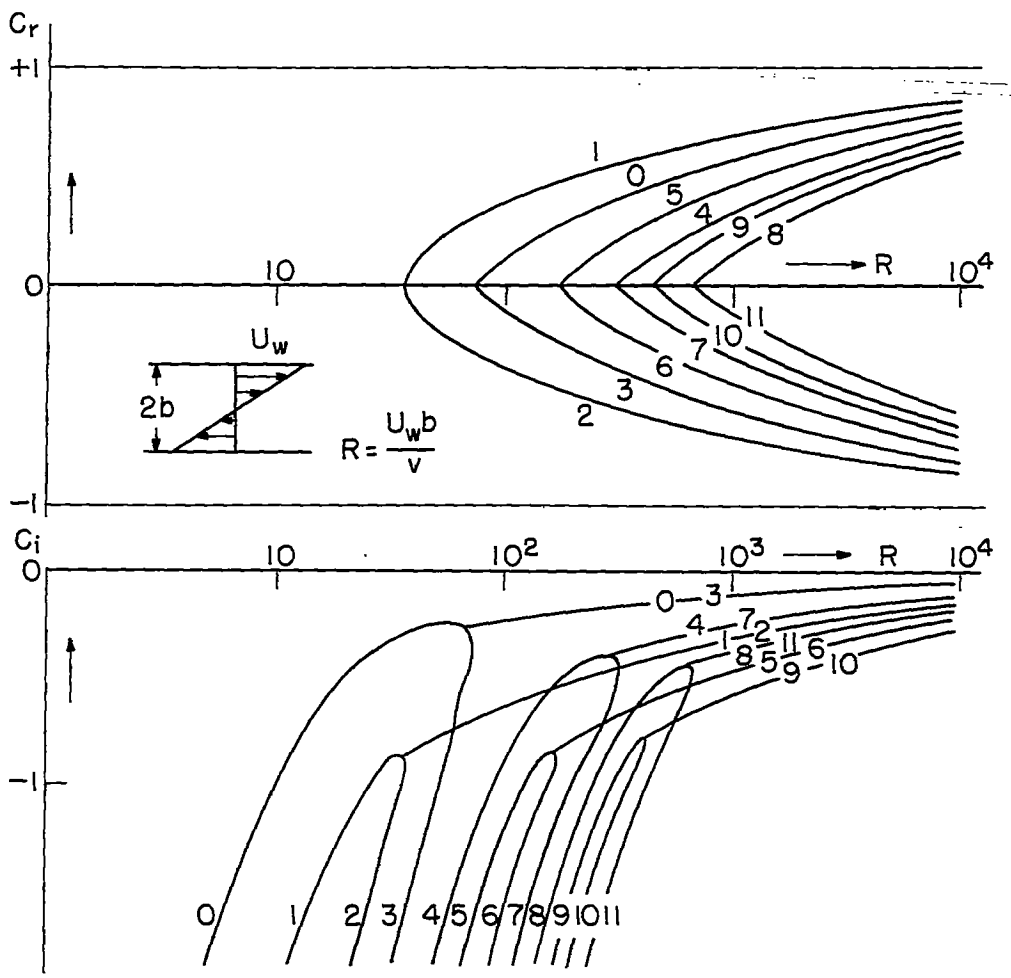

Figure 2.- Rectilinear Couette flow. The twelve lowest eigenvalues c as functions of R for $\alpha = 1$.

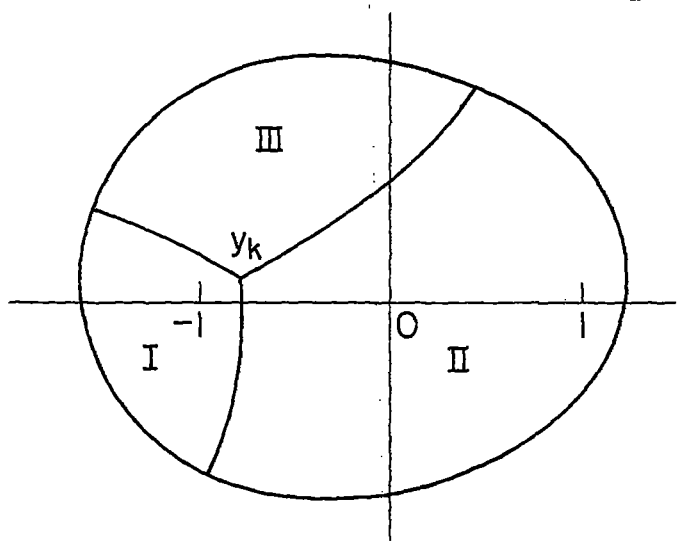

Figure 3. - The regions I, II, and III in the complex y-plane.

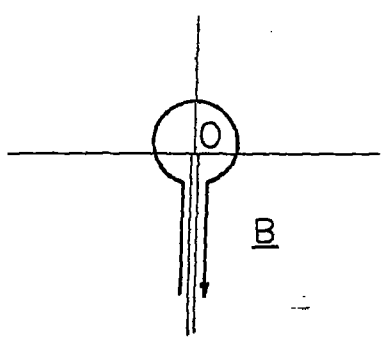

Figure 4. - Path of integration B in the complex z-plane cut open along $(0, -i\infty)$.

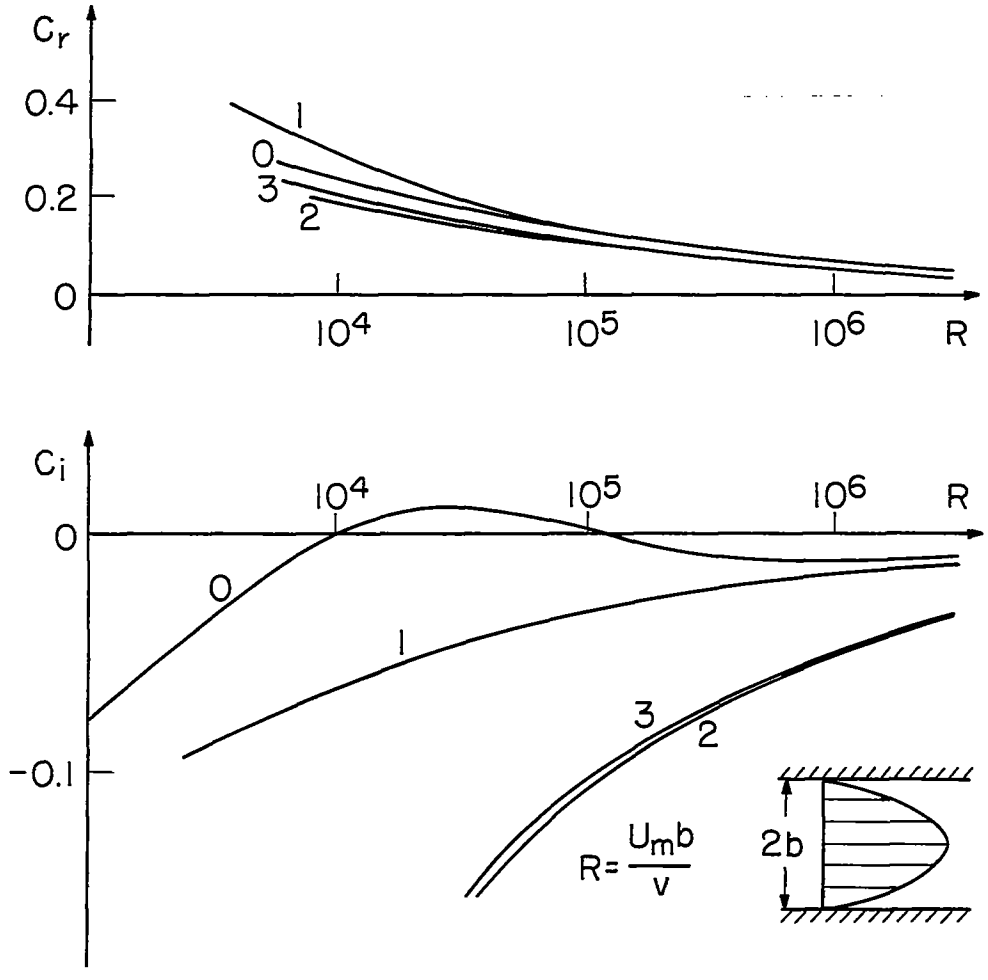

Figure 5.- Two-dimensional Poiseuille flow. The four lowest eigenvalues c as functions of R for $\alpha = 0.87$.

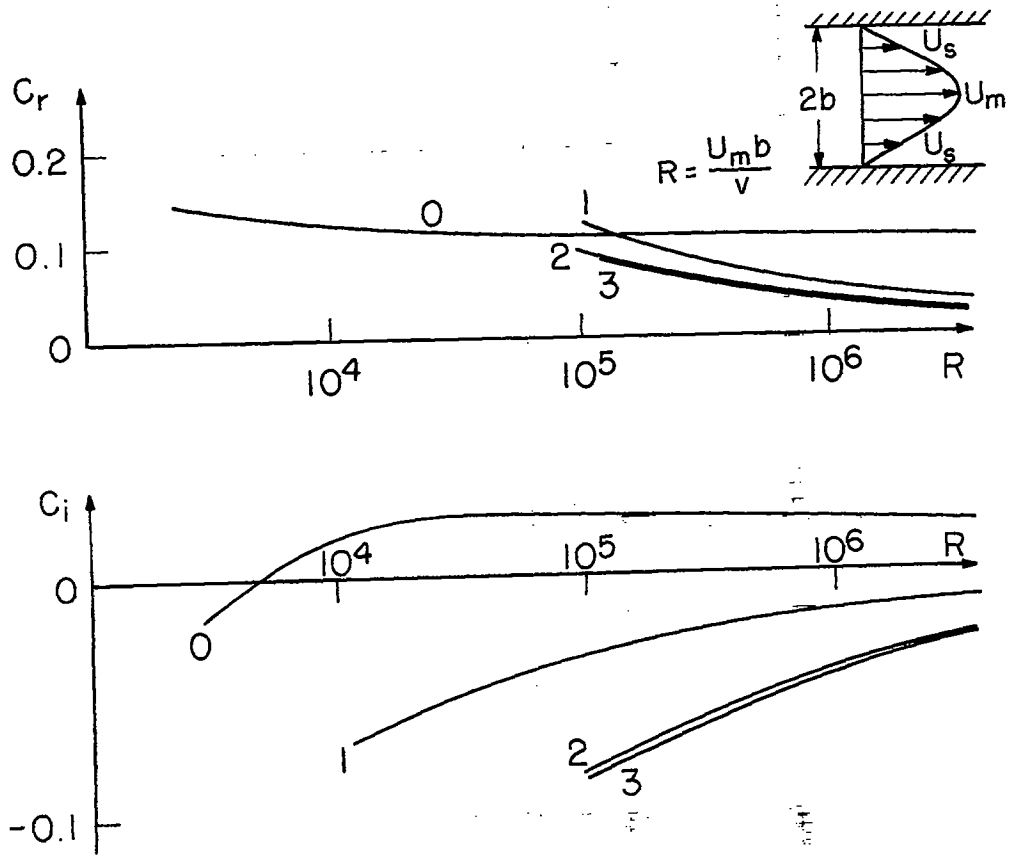

Figure 6.- Inflection-point profile. $U = \left(\sqrt{2} - 1\right) + \left(2 - \sqrt{2}\right)\cos y \frac{3\pi}{4}$. The four lowest eigenvalues c as functions of R for $\alpha = 0.5$.

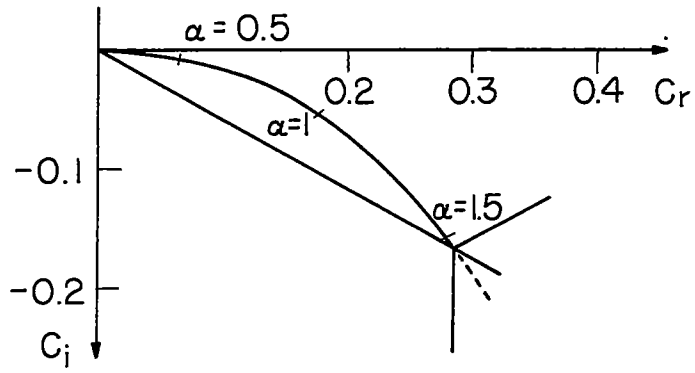

Figure 7.- Two-dimensional Poiseuille flow. The frictionless eigenvalue c associated with an even eigenfunction, as a function of α.

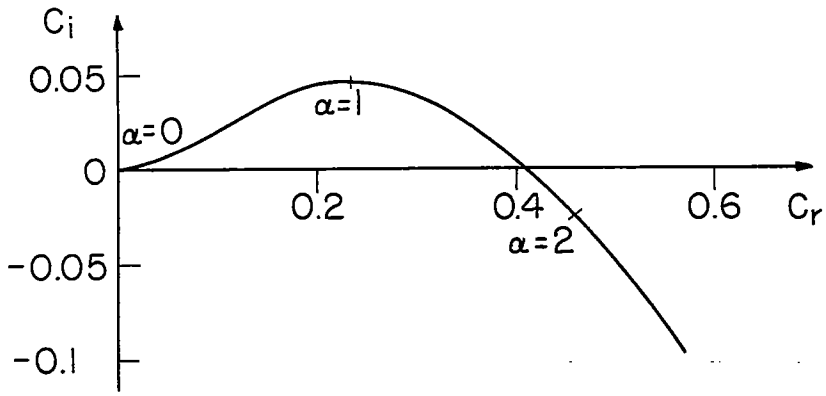

Figure 8.- Inflection-point profile. $U = \left(\sqrt{2} - 1\right) + \left(2 - \sqrt{2}\right)\cos y \frac{3\pi}{4}$. The frictionless eigenvalue c associated with an even eigenfunction, as a function of α.

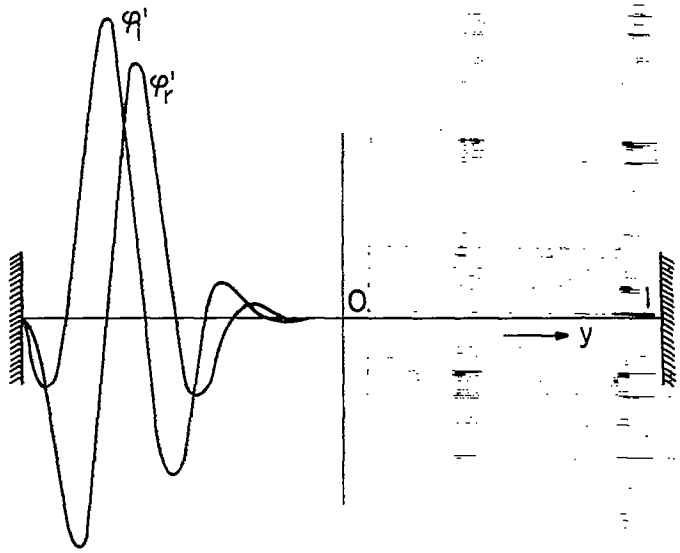

Figure 9.- Rectilinear Couette flow. Eigenfunction $\varphi'(y)$ for $\alpha = 1$ and $R = 10^3$ associated with the eigenvalue $c = -0.70 - i \times 0.30$.

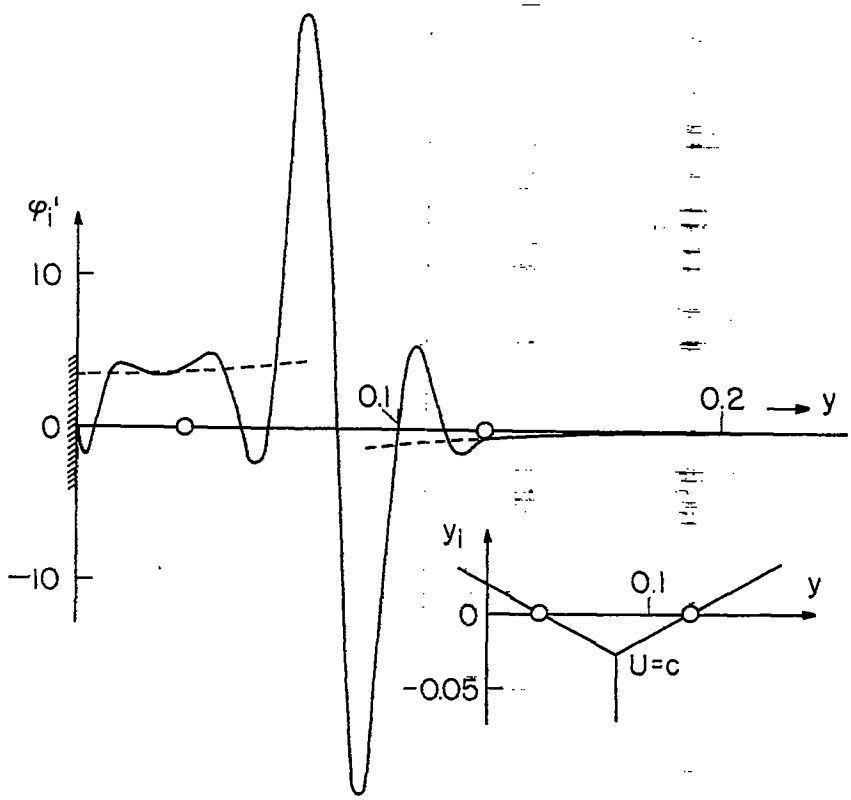

Figure 10.- Two-dimensional Poiseuille flow. Eigenfunction $\varphi'(y)$ for $\alpha = 1$ and $R = 7.7 \times 10^5$ associated with the eigenvalue $c = 0.178 - i \times 0.049$.