NACA TN 3905

NATIONAL ADVISORY COMMITTEE FOR AERONAUTICS

TECHNICAL NOTE 3905

DIFFERENTIAL EQUATIONS OF MOTION FOR COMBINED FLAPWISE BENDING, CHORDWISE BENDING, AND TORSION OF TWISTED NONUNIFORM ROTOR BLADES

By John C. Houbolt and George W. Brooks

Langley Aeronautical Laboratory
Langley Field, Va.

FOR REFERENCE

Washington
February 1957

3 1176 01434 0815

NATIONAL ADVISORY COMMITTEE FOR AERONAUTICS

TECHNICAL NOTE 3905

DIFFERENTIAL EQUATIONS OF MOTION FOR COMBINED FLAPWISE BENDING, CHORDWISE BENDING, AND TORSION OF TWISTED NONUNIFORM ROTOR BLADES

By John C. Houbolt and George W. Brooks

SUMMARY

The differential equations of motion for the lateral and torsional deformations of twisted rotating beams are developed for application to helicopter rotor and propeller blades. No assumption is made regarding the coincidence of the neutral, elastic, and mass axes, and the generality is such that previous theories involving various simplifications are contained as subcases to the theory presented in this paper.

Special attention is given the terms which are not included in previous theories. These terms are largely coupling-type terms associated with the centrifugal forces. Methods of solution of the equations of motion are indicated by selected examples.

INTRODUCTION

This paper deals with the deformation theory of rotating blades. The structural problems of these blades have become more acute in almost every phase of aeronautical-engineering application: For example, propellers have become larger and thinner, particularly in connection with aircraft designed for vertical take-off and landing and short take-off and landing, and as a consequence are more susceptible to vibration and flutter troubles; helicopter blades are subject to numerous vibration, divergence, and flutter problems; and turbine and compressor blades fail frequently because of some vibration phenomena. There is therefore much interest in the development of a more general deformation theory which is fundamental in the structural and dynamic analysis of these problems.

Although many theories on blade deformation exist, these theories either neglect some of the factors of concern or treat them only approximately. The factors are many and include variable stiffness and mass distributions, noncoincidence of the elastic and mass axes, built-in twist, coupling brought about by inertia and centrifugal forces, and so forth. In order to give a rough perspective of the scope of available

theory, figure 1 has been prepared. The nonrotating-beam cases have also been included in figure 1(a). The first two cases refer to uncoupled bending and uncoupled torsion of beams without twist, and much work on these cases has been done; their treatment is in fact classical. The third case is that of coupled bending in two directions and torsion of a twisted beam, wherein the elastic and mass axes are noncoincident (see ref. 1); the subcase where no twist is present has also been given extensive treatment. Additional treatments on general theory of pretwisted beams are also given in references 2 to 4.

The rotating-beam cases which have been treated with the inclusion of centrifugal forces are shown in figure 1(b). The first case, that of pure flapwise bending of an untwisted beam, has been considered by several investigators; reference 5 is a notable example in which beams of variable cross section and different root-end suspensions are analyzed from a design-application standpoint in considerable detail. References 6 to 8 also give substantial treatments to this case. Pure torsion of untwisted rotating beams is treated in references 9 and 10, and combined bending in two directions is treated by various means which include both vector and matrix methods in references 11 to 16.

The case treated in the present paper is shown in figure 2; this case represents the coupled bending in two directions and torsion of a twisted rotating beam where the elastic axis, mass axis, and tension axis are not necessarily coincident. The tension axis is defined as the spanwise locus of the centroids of the cross-sectional area effective in carrying tension. The specific purpose of the paper is to develop the differential equation of deformation of the blade under the action of various applied loads. The development is made along the principles of "engineering" beam theory, and secondary effects, such as deformation due to shear, are not included. The theory is therefore intended primarily for blades of moderate to high aspect ratios, for which plate bending effects are probably not significant. Special subcases which involve simplifications that appear justified in the treatment of certain problems (for example, helicopter blade deformation) are then deduced. Finally, methods of solving the equations are discussed, and examples are given.

SYMBOLS

A	cross-sectional area of blade effective in carrying axial tension
B_1,B_2	section constants, see equations (9)
ds	incremental distance measured along beam fiber in undeformed state

ds_1	incremental distance measured along beam fiber in deformed state
E	Young's modulus of elasticity
e	distance between mass and elastic axis, positive when mass axis lies ahead of elastic center
e_A	distance between area centroid of tensile member and elastic axis, positive for centroid forward
e_o	distance at root between elastic axis and axis about which blade is rotating, positive when elastic axis lies ahead
G	shear modulus of elasticity
I_1,I_2	bending moments of inertia about major and minor neutral axes, respectively (both pass through centroid of cross-sectional area effective in carrying tensions)
J	torsional stiffness constant
k_A	polar radius of gyration of cross-sectional area effective in carrying tensile stresses about elastic axis
k_m	polar radius of gyration of cross-sectional mass about elastic axis $\left(k_m^2 = k_{m1}^2 + k_{m2}^2\right)$
k_{m1},k_{m2}	mass radii of gyration about major neutral axis and about an axis perpendicular to chord through the elastic axis, respectively
L_y	intensity per unit length of laterally applied aerodynamic load in plane of rotation
L_z	intensity per unit length of applied aerodynamic loading perpendicular to plane of rotation
M	intensity per unit length of applied aerodynamic torque loading
M_1	resultant cross-sectional moment about major principal axis
M_2	resultant cross-sectional moment about axis perpendicular to major principal axis and passing through elastic axis
M_x,M_y,M_z	resultant moments in x-, y-, and z-directions, respectively, of M_1, M_2, and Q moments

m	mass of beam per unit length
$\bar{p}_x,\bar{p}_y,\bar{p}_z$	resultant or total loadings per unit length in x-, y-, and z-directions
Q	resultant cross-sectional torque about elastic axis
q	torque loading per unit length
$\bar{q}_x,\bar{q}_y,\bar{q}_z$	resultant torque loadings per unit length in x-, y-, and z-directions
R	blade radius
T	tension in beam, $T \cong \int_x^R \Omega^2 mx\, dx$
t	thickness of cross section at any chordwise position
V_y,V_z	cross-sectional shears in y- and z-directions
v,w	lateral displacements of beam, in plane of rotation and normal to plane, respectively
x,y,z	coordinate system which rotates with blade such that x-axis falls along initial or undeformed position of elastic axis (see figs. 2 and 3)
β	blade angle of station x prior to any deformation, positive when leading edge is upward
ϵ	strain
ϵ_T	strain due to tension, $\frac{T}{EA}$
ζ,η	cross-sectional coordinates; η-axis lies along major axis, ζ-axis is perpendicular to major axis and passes through elastic axis (see fig. 3)
η_{te},η_{le}	values of η for trailing edge and leading edge of cross section
ρ	mass density
σ	stress
ϕ	angle of twisting deformation, positive when leading edge is upward

Ω angular velocity of rotation

ω frequency of vibration, radians/sec

Primes denote derivatives with respect to x; dots denote derivatives with respect to time.

ANALYSIS

General Procedure

As noted from figure 2, the beam is considered as though it were a rotating helicopter blade with rotation counterclockwise when viewed from above. The x-axis of the x,y,z coordinate axes system shown lies outward along the blade and is coincident with the undeformed position of the elastic axis. This set of axes moves with the blade around the axis of rotation at the given rotational velocity Ω, and all deformations of the blade are referred to this coordinate system. The blade is considered under the action of distributed aerodynamic loadings in the y- and z-directions and under a distributed torque loading about the elastic axis, where the intensities per unit length are denoted by L_y, L_z, and M, respectively. The tension in the beam is denoted by T.

Figures 3(a) and (b) show the coordinate system used for the blade cross section and the chosen displacements of this analysis. The η- and ζ-axes, with the origin at the elastic axis and the η-axis along the major axis of the cross section, move with the cross section. The blade deformations are denoted by a displacement v of the elastic axis in the plane of rotation, positive when in the direction of rotation, a displacement w out of the plane of rotation, positive upward, and a rotation ϕ about the elastic axis. The built-in twist β and also ϕ are positive when the blade leading edge is up.

The aim of this analysis is to derive the differential equation of motion in terms of v, w, and ϕ. The derivation proceeds along the following steps:

(1) The equation for longitudinal strain at any point on the cross section is derived in terms of the displacements.

(2) With the aid of this strain equation the internal elastic moments are derived; these are the resultant moments taken about the η- and ζ-axes and are shown in figure 3(c).

(3) The transformation is then made of these elastic moments to the more easily handled moments which have vectors parallel to the x,y,z axes system. (See fig. 3(c).)

(4) The equilibrium expressions for these latter moments are derived, and this consideration involves the introduction of the total loading on the beam.

(5) The total loadings, composed of the body forces and applied loadings, are derived.

(6) Steps 3, 4, and 5 are combined to give the final differential equations.

Derivation of Strain Equation

Both longitudinal and shearing strains are, of course, produced during bending and torsion of the beam. In general, both types of strains must be considered in determining the resultant forces and moments that act on a given cross section. In the treatment given in the present paper, however, an approach is used which requires that only the longitudinal strains have to be considered explicitly. In appendix A a derivation akin to an engineering beam theory is given for the strain that develops in any longitudinal fiber of a twisted beam which undergoes translational displacements v and w and a torsional displacement ϕ. The derivation is mainly formal, but a physical insight of how strain is developed may be gained by considering the possible motions of the imaginary cutting planes shown in figure 4 and which are assumed to remain plane during deformation. In general, strain may arise from four types of motion: pure displacement of the planes toward or away from each other, rotation of the planes associated with chordwise bending, rotation of the planes associated with flapwise bending, and rotation of the planes relative to one another about the elastic axis to cause beam twisting. With the assumption that the cross section is symmetrical about the major principal axis, the resulting longitudinal strain is found to be

$$\epsilon = -\epsilon_T + \left(e_A - \eta\right)\left(v''\cos\beta + w''\sin\beta\right) + \zeta\left(v''\sin\beta - w''\cos\beta\right) + \left(\zeta^2 + \eta^2 - k_A{}^2\right)\beta'\phi' \tag{1}$$

The longitudinal stresses follow directly from this equation and are

$$\sigma = E\left[\epsilon_T + \left(e_A - \eta\right)\left(v''\cos\beta + w''\sin\beta\right) + \zeta\left(v''\sin\beta - w''\cos\beta\right) + \left(\zeta^2 + \eta^2 - k_A{}^2\right)\beta'\phi'\right] \tag{2}$$

No further development of cross-sectional stresses or strains is necessary. The consideration of shearing stresses which are associated with longitudinal stresses, that is, the shearing stresses which are necessary to satisfy equilibrium of an elemental tube, is avoided by choosing the elastic axis (defined here as the locus of shear centers) as a reference axis; the consideration of shearing stresses due to twisting deformation is obviated through use of the assumption that the resisting torque includes a St. Venant type torsional term which is the same as would develop if the beam were initially untwisted. Both of these items will be introduced in the next section.

Derivation of Internal Elastic Moments

The stress distributions over the cross section may now be resolved into effective internal resisting moments at the elastic-axis position, as shown in figures 3 and 5. In order to determine these moments, the inclination relative to the elastic axis of the general beam fiber due to initial twist and twisting deformation must be considered. The stress along this fiber is resolved into two components, one parallel to the elastic axis and one in a plane perpendicular to the elastic axis. (See fig. 5.) From the longitudinal component, the flapwise bending moment M_1 and the chordwise bending moment M_2 are given as follows:

$$M_1 = -\int_{\eta_{te}}^{\eta_{le}} \int_{-t/2}^{t/2} \sigma\zeta \, d\zeta \, d\eta \tag{3}$$

$$M_2 = -\int_{\eta_{te}}^{\eta_{le}} \int_{-t/2}^{t/2} \sigma\eta \, d\zeta \, d\eta \tag{4}$$

where the minus signs have been introduced to make the moments positive when they produce compression in the upper and nose fibers, respectively.

The component in the plane normal to the elastic axis leads to an effective torsional resisting moment. The consideration of this component and the addition of the torque associated with St. Venant twisting mentioned previously leads to the following equation for total resisting torque:

$$Q = GJ\phi' + \int_{\eta_{te}}^{\eta_{le}} \int_{-t/2}^{t/2} \sigma(\beta + \phi)'\left(\eta^2 + \zeta^2\right) d\zeta \, d\eta \tag{5}$$

where a positive torque is associated with a positive ϕ'. In equation (5), the choice of the elastic axis as a reference axis is significant. The elastic axis does not necessarily coincide with the centroidal axis, and if the centroidal axis, or for that matter any other axis, were used as a reference, then the shearing stresses associated with longitudinal stresses would contribute to the total resisting torque. Such a term would have to be included in equation (5) and would thus lead to considerable complication in the analysis. With the choice of the elastic axis, however, no such term appears, because the elastic axis is defined herein as the axis about which the resultant torque of the shearing stresses due to longitudinal stresses is zero.

Since the elastic axis is important, the establishment of this axis position will be discussed now. Consider differential longitudinal stresses to arise which have a cross-sectional distribution the same as that given by equation (2). The differential longitudinal stresses associated with the expression $E\left[\epsilon_T + e_A\left(v''\cos\beta + w''\sin\beta\right) - k_A{}^2\beta'\phi'\right]$ are uniform across the cross section and hence do not produce any shearing stresses. For the expression

$$E\left[-\eta(v''\cos\beta + w''\sin\beta) + \left(\zeta^2 + \eta^2\right)\beta'\phi'\right]$$

the differential stresses would be symmetrical about the major axis (η-axis) and, since the cross section is assumed symmetrical, would lead to a resultant shear directed along the major axis. Only the remaining term $E\zeta(v''\sin\beta - w''\cos\beta)$ can lead to shearing stresses which produce torque. Thus in order to locate the position of the elastic axis, it is sufficient to consider the beam in bending about the major axis only, with a linear stress distribution in the ζ-direction, and then to determine the shearing stresses over the cross section (in the η- and ζ-directions) and the position along the major axis for which these shearing stresses produce no resultant torque. (See treatments on elastic axis and shear center in ref. 17.)

The substitution of equation (2) into equations (3), (4), and (5) gives the following equations for total elastic moments in terms of the displacements:

$$M_1 = EI_1(-v''\sin\beta + w''\cos\beta) \tag{6}$$

$$M_2 = EI_2(v''\cos\beta + w''\sin\beta) - Te_A - EB_2\beta'\phi' \tag{7}$$

$$Q = \left[GJ + Tk_A{}^2 + EB_1(\beta')^2\right]\phi' + Tk_A{}^2\beta' - EB_2\beta'(v''\cos\beta + w''\sin\beta) \tag{8}$$

where I_1 and I_2 are the principal moments of inertia of the tensile carrying area (I_2 is the moment of inertia about the mean principal axis, not about the ζ-axis) and where B_1 and B_2 are section constants defined by

$$\left.\begin{aligned} B_1 &= \int_{\eta_{te}}^{\eta_{le}} t\eta^2\left(\eta^2 + \frac{t^2}{6} - k_A{}^2\right)d\eta \\ B_2 &= \int_{\eta_{te}}^{\eta_{le}} t\eta\left(\eta^2 + \frac{t^2}{12} - k_A{}^2\right)d\eta \end{aligned}\right\} \tag{9}$$

In equations (9) it is interesting to note that if displacements parallel and perpendicular to the blade chord had been used instead of v and w the results obtained would differ from those used by other investigations. (See appendix A for the results obtained.) Also of interest is the form that equation (8) would take if large deflections in ϕ were considered, but with $v = w = 0$. This point, which is connected with the possibility of a torsional instability, is discussed also in appendix A.

Moment Transformation

In the consideration of the equilibrium between moments, shears, and tension, it is more convenient to deal with moments that are orientated parallel to the x-, y-, and z-axes, that is, the moments M_x, M_y, and M_z shown in figure 3. A simple transformation of the moments M_1, M_2, and Q to these newer moments is thus desired. When the M_1, M_2, and Q moments are resolved into components in the x-, y-, and z-directions, respectively, and use is made of the relations that when ϕ is small

$$\left.\begin{aligned} \sin(\beta + \phi) &= \sin\beta + \phi\cos\beta \\ \cos(\beta + \phi) &= \cos\beta - \phi\sin\beta \end{aligned}\right\} \tag{10}$$

the following relations are obtained:

$$\left.\begin{aligned} M_x &= Q + M_1(\cos\beta - \phi\sin\beta)v' + M_1(\sin\beta + \phi\cos\beta)w' + \\ &\qquad M_2(\sin\beta + \phi\cos\beta)v' - M_2(\cos\beta - \phi\sin\beta)w' \\ M_y &= M_1(\cos\beta - \phi\sin\beta) + M_2(\sin\beta + \phi\cos\beta) - Qv' \\ M_z &= -M_1(\sin\beta + \phi\cos\beta) + M_2(\cos\beta - \phi\sin\beta) + Qw' \end{aligned}\right\} \tag{11}$$

Now when equations (6), (7), and (8) are substituted into equations (11), and all the second-order terms are dropped, the following desired equations for M_x, M_y, and M_z in terms of the displacements are found:

$$M_x = \left[GJ + Tk_A^2 + EB_1(\beta')^2\right]\phi' + Tk_A^2\beta' - EB_2\beta'(v''\cos\beta + w''\sin\beta) - Te_A\, v'\sin\beta + Te_A w'\cos\beta \tag{12}$$

$$M_y = \left(EI_1\cos^2\beta + EI_2\sin^2\beta\right)w'' + \left(EI_2 - EI_1\right)\sin\beta\cos\beta\, v'' - \left(Te_A + EB_2\beta'\phi'\right)\sin\beta - Te_A\phi\cos\beta \tag{13}$$

$$M_z = \left(EI_2 - EI_1\right)\sin\beta\cos\beta\, w'' + \left(EI_1\sin^2\beta + EI_2\cos^2\beta\right)v'' - \left(Te_A + EB_2\beta'\phi'\right)\cos\beta + Te_A\phi\sin\beta \tag{14}$$

Equilibrium Conditions

The equilibrium of the forces and moments that act on a differential beam element is now considered. In this consideration the element is formed by slices parallel to the yz-plane, because this choice leads to rather simple results. The forces that act on such an element are shown in figure 6(a); the moments, in figure 6(b). The quantities $\bar{p}_x$, $\bar{p}_y$, $\bar{p}_z$, $\bar{q}_x$, $\bar{q}_y$, and $\bar{q}_z$ are resultant force and moment loadings, which involve both the acceleration body forces and the applied aerodynamic loading. The acceleration body forces, due to both centrifugal and transverse accelerations, are derived in appendix B.

Summation of the forces in the x-, y-, and z-directions and summation of the moments about the x-, y-, and z-axes lead to the following equilibrium conditions for shear and moment:

$$\left.\begin{aligned} T' + \bar{p}_x &= 0 \\ V_y' + \bar{p}_y &= 0 \\ V_z' + \bar{p}_z &= 0 \end{aligned}\right\} \tag{15}$$

$$M_x' - V_y w' + V_z v' + \bar{q}_x = 0 \tag{16a}$$

$$M_y' - Tw' + V_z + \bar{q}_y = 0 \tag{16b}$$

$$M_z' - Tv' + V_y + \bar{q}_z = 0 \tag{16c}$$

By substitution the shears in these equations may be eliminated to give the following basic equilibrium conditions:

$$\left.\begin{aligned} &M_x' - M_y'v' + M_z'w' - \bar{q}_y v' + \bar{q}_z w' + \bar{q}_x = 0 \\ &M_y'' - (Tw')' + \bar{q}_y' - \bar{p}_z = 0 \\ &M_z'' - (Tv')' + \bar{q}_z' - \bar{p}_y = 0 \end{aligned}\right\} \tag{17}$$

Substitution of equations (12), (13), and (14) into equations (17) gives

$$-\left\{\left[GJ + Tk_A{}^2 + EB_1(\beta')^2\right]\phi' + Tk_A{}^2\beta' - EB_2\beta'(v''\cos\beta + w''\sin\beta)\right\}' + Te_A v''\sin\beta - Te_A w''\cos\beta + \bar{q}_y v' - \bar{q}_z w' - \bar{q}_x = 0 \tag{18}$$

$$\left[\left(EI_1\cos^2\beta + EI_2\sin^2\beta\right)w'' + \left(EI_2 - EI_1\right)\sin\beta\cos\beta\, v'' - \left(Te_A + EB_2\beta'\phi'\right)\sin\beta - Te_A\phi\cos\beta\right]'' - (Tw')' + \bar{q}_y' - \bar{p}_z = 0 \tag{19}$$

$$\left[\left(EI_2 - EI_1\right)\sin\beta\cos\beta\, w'' + \left(EI_1\sin^2\beta + EI_2\cos^2\beta\right)v'' - \left(Te_A + EB_2\beta'\phi'\right)\cos\beta + Te_A\phi\sin\beta\right]'' - (Tv')' + \bar{q}_z' - \bar{p}_y = 0 \tag{20}$$

where second-order terms have been dropped. Only the loadings now remain to be considered.

Resultant Loadings

As mentioned previously, the resultant or total loadings are composed of both the inertia loading due to centrifugal and vibratory accelerations and the applied aerodynamic loading. The inertia loadings, which consist of the forces and moments which oppose accelerations of the blade elements, are derived in appendix B whereas the aerodynamic loadings L_y, L_z, and M are left in this symbolic form, since they are in the nature of externally applied loadings.

The procedure that follows is employed in the derivation of the total loadings which is given in appendix B. The acceleration of any mass particle on the vibrating, rotating blade is derived and the components in the x-, y-, and z-directions are obtained. These component accelerations include terms for the Coriolis force and transverse and centrifugal accelerations along with higher order terms. The inertia force and moment loadings are then obtained by integrating over the cross section; these are simplified by dropping second-order terms and are then added with the aerodynamic or applied loadings to yield the following desired resultant loadings $\bar{p}_x$, $\bar{p}_y$, $\bar{p}_z$, $\bar{q}_x$, $\bar{q}_y$, and $\bar{q}_z$:

$$\left.\begin{aligned}
\bar{p}_x &= -T' = \Omega^2 mx \\
\bar{p}_y &= L_y - m\left[\ddot{v} - \Omega^2(v + e_o)\right] + me\left[\ddot{\phi}\sin\beta + \Omega^2(\cos\beta - \phi\sin\beta)\right] \\
\bar{p}_z &= L_z - m(\ddot{w} + e\ddot{\phi}\cos\beta) \\
\bar{q}_x &= M - \Omega^2 me\left[(v + e_o)\sin\beta + e_o\phi\cos\beta\right] + me(\ddot{v}\sin\beta - \ddot{w}\cos\beta) - \\
&\qquad \Omega^2 m\left(k_{m2}{}^2 - k_{m1}{}^2\right)(\sin\beta\cos\beta + \phi\cos 2\beta) - mk_A{}^2\ddot{\phi} \\
\bar{q}_y &= -\Omega^2 mex(\sin\beta + \phi\cos\beta) \\
\bar{q}_z &= -\Omega^2 mex(\cos\beta - \phi\sin\beta)
\end{aligned}\right\} \quad (21)$$

Final Differential Equations

The substitution of equations (21) into equations (18), (19), and (20) gives now the desired final differential equations of equilibrium

$$- \left\{\left[GJ + Tk_A^2 + EB_1(\beta')^2\right]\phi' - EB_2\beta'(v''\cos\beta + w''\sin\beta)\right\}' +$$

$$\underline{Te_A(v''\sin\beta - w''\cos\beta)} + \underline{\Omega^2 mxe(-v'\sin\beta + w'\cos\beta)} + \underline{\Omega^2 me\sin\beta v} +$$

$$\Omega^2 m\left[\left(k_{m2}^2 - k_{m1}^2\right)\cos 2\beta + \underline{ee_o\cos\beta}\right]\phi + mk_m^2\ddot{\phi} - me(\ddot{v}\sin\beta - \ddot{w}\cos\beta) =$$

$$M + \left(Tk_A^2\beta'\right)' - \Omega^2 m\left[\left(k_{m2}^2 - k_{m1}^2\right)\sin\beta\cos\beta + \underline{ee_o\sin\beta}\right] \tag{22}$$

$$\left[\left(EI_1\cos^2\beta + EI_2\sin^2\beta\right)w'' + \left(EI_2 - EI_1\right)\sin\beta\cos\beta\, v'' - \underline{Te_A\phi\cos\beta} -\right.$$

$$\left.\underline{EB_2\beta'\phi'\sin\beta}\right]'' - (Tw')' - \underline{(\Omega^2 mxe\phi\cos\beta)'} + m(\ddot{w} + e\ddot{\phi}\cos\beta) =$$

$$L_z + \underline{(Te_A\sin\beta)''} + \underline{(\Omega^2 mxe\sin\beta)'} \tag{23}$$

$$\left[\left(EI_2 - EI_1\right)\sin\beta\cos\beta\, w'' + \left(EI_1\sin^2\beta + EI_2\cos^2\beta\right)v'' + \underline{Te_A\phi\sin\beta} -\right.$$

$$\left.\underline{EB_2\beta'\phi'\cos\beta}\right]'' - (Tv')' + \underline{(\Omega^2 mxe\phi\sin\beta)'} + \underline{\Omega^2 me\phi\sin\beta} + m(\ddot{v} - e\ddot{\phi}\sin\beta) - \Omega^2 mv =$$

$$L_y + \underline{\left(Te_A\cos\beta\right)''} + \underline{\left(\Omega^2 mxe\cos\beta\right)'} + \underline{\Omega^2 m(e_o + e\cos\beta)} \tag{24}$$

In these equations, the terms that are not included in previous theories have been underlined. (It should be noted that ref. 18 suggests the existence of the centrifugal coupling terms $\Omega^2 mxew'$ and $\left(\Omega^2 mxe\phi\right)'$ for the case of a blade with $\beta = 0$.) Many of these new terms are coupling-type terms which are associated with the centrifugal forces. A number of the new terms take the forms of lateral and twisting loadings which tend to deflect the blade even in the absence of externally applied loads; because of this fact they have been written on the right-hand sides along with the applied loads L_y, L_z, and M.

Importance of coupling forms.- It is beyond the scope of this paper to make a complete evaluation of the magnitude of each of the coupling terms and their influence on such phenomena as, say, blade vibration. A rough idea of their importance can be gathered by analyzing each term in detail and comparing them to other terms of known importance. As an example, consider $\left(Te_A\phi\cos\beta\right)''$ in equation (23). If, for simplicity

in the consideration, e_A and m are considered independent of x, and if $\beta = 0$, then this term would become on expansion

$$-\Omega^2 m e_A \phi + 2T'\left(e_A\phi\right)' + T\left(e_A\phi\right)''$$

These terms may now be compared with other terms of known importance. Thus, if $e_A\phi$ is interpreted as a deflection, then the last two terms of this expansion are seen to be exactly comparable to the expansion of the well-known and important term $(Tw')' = T'w' + Tw''$. Also the first term $-\Omega^2 m e_A \phi$ is directly comparable with the coupling term of established importance in the consideration of coupled bending-torsion of vibrating beams, namely, $\omega^2 m e \phi$. A similar consideration may be given each of the other new terms in the final equations. The examples to be presented later will also give an indication of the importance of some of the terms.

Boundary conditions.- Since the problem is, of course, a boundary-value problem, some mention of the associated boundary conditions should be made. The most general case involves ten boundary conditions - two conditions associated with equation (22), and four each for equations (23) and (24). These conditions all evolve from the type of constraint that is imposed on the ends of the beam on the displacements v, w, and ϕ, the moments M_y and M_z (eqs. (13) and (14)), the torque Q (eq. (8)), and the shears V_y and V_z which are defined by equations (16b) and (16c) For a completely fixed end, the boundary conditions would be

$$v = w = \phi = v' = w' = 0$$

For a free end, the conditions would be

$$Q = M_y = M_z = V_y = V_z = 0$$

In this case, the alternate choice of $M_1 = M_2 = 0$ (see eqs. (6) and (7) may be used instead of $M_y = M_z = 0$.

For the present system, an end cannot be referred to simply as pin-ended; care must be taken to specify the number and directions of pins present. For example, an end may have a pin which runs parallel to the y-axis but may be fixed as regards displacements v and ϕ. In this example, the moment M_y has been relaxed and the boundary conditions become

$$v = w = v' = \phi = M_y = 0$$

Other pin-ended conditions follow in a similar fashion.

Elastically restrained ends may be handled in a manner similar to that used in the usual treatment of beams, except that the direction of the restraint must be properly taken into account.

Subcases of the general theory.- In actual applications, several special subcases of the present theory are frequently encountered. Three of these subcases are described as follows:

Case I: The built-in twist is zero, $\beta = 0$.

Case II: Bending in two directions without torsion, $\phi = 0$.

Case III: Torsion only, $v = w = 0$.

The equations of motion which result when the theory is reduced to these special cases are as follows:

For case I, $\beta = 0$,

$$-\left[\left(GJ + Tk_A^2\right)\phi'\right]' - \underline{Te_A w''} + \Omega^2 mxew' + \Omega^2 m\left(k_{m2}^2 - k_{m1}^2 + \underline{ee_o}\right)\phi + mk_m^2\ddot{\phi} + me\ddot{w} = M \tag{25}$$

$$\left(EI_1 w'' - Te_A\phi\right)'' - (Tw')' - \left(\Omega^2 mxe\phi\right)' + m(\ddot{w} + e\ddot{\phi}) = L_z \tag{26}$$

$$\left(EI_2 v''\right)'' - (Tv')' - \Omega^2 mv + m\ddot{v} = L_y - \underline{\left(Te_A\right)''} + \left(\Omega^2 mxe\right)' + \Omega^2 m\underline{\left(e_o} + e\right) \tag{27}$$

For case II, $\phi = 0$,

$$\left[\left(EI_1 \cos^2\beta + EI_2 \sin^2\beta\right)w'' + \left(EI_2 - EI_1\right)\sin\beta\cos\beta\, v''\right]'' - (Tw')' + m\ddot{w} =$$
$$L_z + \left(Te_A \sin\beta\right)'' + \left(\Omega^2 mxe \sin\beta\right)' \tag{28}$$

$$\left[\left(EI_2 - EI_1\right)\sin\beta\cos\beta\, w'' + \left(EI_1 \sin^2\beta + EI_2 \cos^2\beta\right)v''\right]'' - (Tv')' - \Omega^2 mv + m\ddot{v} =$$
$$L_y + \left(Te_A \cos\beta\right)'' + \left(\Omega^2 mxe \cos\beta\right)' + \Omega^2 m\left(e_o + e\cos\beta\right) \tag{29}$$

For case III, $v = w = 0$,

$$-\left\{\left[GJ + Tk_A^2 + EB_1(\beta')^2\right]\phi'\right\}' + \Omega^2 m\left[\left(k_{m2}^2 - k_{m1}^2\right)\cos 2\beta + ee_o \cos \beta\right]\phi + mk_m^2\ddot{\phi} =$$

$$M + \left(Tk_A^2\beta'\right)' - \Omega^2 m\left[\left(k_{m2}^2 - k_{m1}^2\right)\sin \beta \cos \beta + ee_o \sin \beta\right] \tag{30}$$

Associated Energy Equation

As a check on the derivation presented herein, the differential equations of equilibrium were derived by a completely different approach that involves energy principles. In this energy approach the strain energy of deformation, in which the longitudinal strains were arrived at in a different manner than that presented herein, and the work performed by all the forces present were considered. The equation for total potential energy of the system is, of course, closely allied to the differential equations and is of intrinsic value in the treatment of the problem of the present paper from an energy standpoint. For completeness, the equation is presented here without derivation. If U denotes the total strain energy and V represents the work performed by the centrifugal body forces and the applied loading, then

$$\begin{aligned}
U - V = \frac{1}{2}\int_0^R \Big\{ & EI_1(v''\sin \beta - w''\cos \beta)^2 + EI_2(v''\cos \beta + w''\sin \beta)^2 + \\
& \left[GJ + EB_1(\beta')^2\right](\phi')^2 - 2EB_2(v''\cos \beta + w''\sin \beta)\beta'\phi'\Big\}\, dx - \\
& \int_0^R \Bigg(T\left\{-\frac{1}{2}\left[(v')^2 + (w')^2\right] + e_A(v''\cos \beta + w''\sin \beta) - \right. \\
& \left. e_A\phi(v''\sin \beta - w''\cos \beta) - k_A^2\left[\frac{1}{2}(\phi')^2 + \beta'\phi'\right]\right\} + \\
& \Omega^2 m\Big\{xe\left[-(v'\cos \beta + w'\sin \beta) + \phi(v'\sin \beta - w'\cos \beta)\right] + \frac{1}{2}v^2 + \\
& (e \cos \beta + e_o - e\phi \sin \beta)v + \Big[-\left(k_{m2}^2 - k_{m1}^2\right)\sin \beta \cos \beta - \\
& ee_o \sin \beta\Big]\phi - \frac{1}{2}\left[\left(k_{m2}^2 - k_{m1}^2\right)\cos 2\beta + ee_o \cos \beta\right]\phi^2\Big\} + \\
& p_y v + p_z w + q\phi\Bigg)dx
\end{aligned} \tag{31}$$

where p_y, p_z, and q are the applied loadings considered in a static sense. Application of the minimum variational principles to this expression yields differential equations which are the same as those given by equations (22), (23), and (24) when ϕ, v, and w are not time dependent. The variation also gives the boundary conditions on moments, shears, and torques that are for stipulated geometrical conditions at the ends of the beam and are given in the section entitled "Boundary Conditions". The differential equations applicable when time dependent motion is considered may now be obtained by writing the loadings p_y, p_z, and q as the sum of the applied loadings and vibratory inertia loads (as obtained by D'Alembert's principle); specifically,

$$\left.\begin{aligned} p_y &= L_y - m(\ddot{v} - e\ddot{\phi} \sin \beta) \\ p_z &= L_z - m(\ddot{w} + e\ddot{\phi} \cos \beta) \\ q &= M + me(\ddot{v} \sin \beta - \ddot{w} \cos \beta) - mk_m{}^2\ddot{\phi} \end{aligned}\right\} \tag{32}$$

The substitution of these loadings into the differential equations obtained by the variational process then gives equations identical to equations (22), (23), and (24).

METHOD OF SOLUTION AND EXAMPLES

The general differential equations of this paper cannot be solved exactly, and it is therefore necessary to resort to some approximate means. Two means, which differ in manipulations but which yield equivalent results, will be considered here - one is a modified Galerkin type procedure, the other a Rayleigh-Ritz procedure.

In the modified Galerkin procedure, the displacements are assumed to be expressed in finite series of known functions as follows:

$$\left.\begin{aligned} \phi &= a_1\phi_1 + a_2\phi_2 + \cdot \cdot \cdot a_p\phi_p \\ w &= b_1w_1 + b_2w_2 + \cdot \cdot \cdot b_qw_q \\ v &= c_1v_1 + c_2v_2 + \cdot \cdot \cdot c_rv_r \end{aligned}\right\} \tag{33}$$

where a_n, b_n, and c_n are unknown coefficients, which may be time dependent, and ϕ_n, w_n, and v_n are chosen modal functions which satisfy

the geometrical boundary conditions of the problem. A set of linear simultaneous equations which allow the evaluation of the unknown coefficients is now formed through application of the following equations:

$$\int_0^R \phi_n D_1(\phi,w,v)dx + Q\phi_n\Big]_0^R = 0 \qquad (n = 1, 2, 3, \ldots p) \tag{34a}$$

$$\int_0^R w_n D_2(\phi,w,v)dx + M_y w_n'\Big]_0^R + V_z w_n\Big]_0^R = 0 \qquad (n = 1, 2, 3, \ldots q) \tag{34b}$$

$$\int_0^R v_n D_3(\phi,w,v)dx + M_z v_n'\Big]_0^R + V_y v_n\Big]_0^R = 0 \qquad (n = 1, 2, 3, \ldots r) \tag{34c}$$

where $D_1(\phi,w,v)$, $D_2(\phi,w,v)$, and $D_3(\phi,w,v)$ denote, respectively, equations (22), (23), and (24) with all the right-hand terms transferred to the left-hand side; Q, M_y, and M_z are given by equations (8), (13), and (14); and V_z and V_y are found from equations (16b) and (16c). For static or other externally imposed loading conditions, the set of equations formed by equations (34) will be nonhomogeneous; the solution for the unknown coefficients and, hence, the displacements then proceeds by ordinary means. For a characteristic-value problem, such as free vibrations, the set of equations will be homogeneous, and the vanishing determinant will yield the characteristic frequencies.

This procedure is called a modified Galerkin procedure because of the presence of the boundary terms in equations (34). In general, it would be very difficult to choose modal functions in equations (33) so that both the geometric and "force" (shear, moment, torque) boundary conditions are satisfied, which is necessary in the usual Galerkin approach. Therefore, the force boundary terms are added in equations (34), and, thus, the stipulations on the chosen modal functions are relaxed so that only the geometric conditions need be satisfied. It should be mentioned that in actual applications these force boundary conditions do not have to be evaluated, since they can always be cancelled by integrating certain of the terms of the integrals by parts. A justification of this procedure can be obtained from the Rayleigh-Ritz procedure.

In this Rayleigh-Ritz approach the displacements are expanded in series as before (see eqs. (33)), with the same requirement on the geometric boundary conditions. These expansions are substituted into the energy equation (31), and a minimization is then made with respect to the unknown coefficients; that is,

$$\left.\begin{aligned}
\frac{\partial(U - v)}{\partial a_n} &= 0 \qquad (n = 1, 2, \ldots p) \\
\frac{\partial(U - v)}{\partial b_n} &= 0 \qquad (n = 1, 2, \ldots q) \\
\frac{\partial(U - v)}{\partial c_n} &= 0 \qquad (n = 1, 2, \ldots r)
\end{aligned}\right\} \tag{35}$$

The resulting equations will be identical with those of equations (34). As a matter of fact, equations (35) may be used to prove the validity of equations (34) (through appropriate integration by parts) and thus to show that the two procedures outlined here are really equivalent. Because of the confusion that often arises about boundary conditions when the Galerkin process is applied, the safest procedure is to use the Rayleigh-Ritz approach.

Two examples are now given to show the application of the two procedures discussed and to show further the importance of some of the coupling terms.

Example 1

In example 1, it is desired to determine the natural frequencies of a rotating cantilever blade having zero initial twist or blade angle of attack ($\beta = 0$) and with $v = 0$. The Rayleigh-Ritz procedure will be used. Assume that the displacements ϕ and w are given as follows:

$$\left.\begin{aligned}
\phi &= a_1\phi_1 + a_2\phi_2 + a_3\phi_3 \\
w &= b_1w_1 + b_2w_2 + b_3w_3
\end{aligned}\right\} \tag{36}$$

where ϕ_n and w_n are the natural uncoupled modes of the nonrotating beam in torsion and bending, respectively, and are expressed in terms of a unit tip displacement. Equations (36) are substituted into equation (31) with $v = \beta = 0$, and a minimization is made with respect to a_n and b_n, and then use is made of equations (32), with the applied loadings $L_y = L_z = M = 0$. The resulting equations are then reduced as follows. First, the relations which apply to uncoupled vibrations are used, namely

$$\left.\begin{aligned}
&\int_0^R mw_m w_n \, dx = 0 && (m \neq n)\\
&\qquad\qquad = M_n && (m = n)\\
&\int_0^R EI_1 w_m'' w_n'' \, dx = 0 && (m \neq n)\\
&\qquad\qquad = \omega_n^2 \int_0^R mw_n^2 dx && (m = n)\\
&\qquad\qquad = \omega_n^2 M_n \\
&\int_0^R mk_A^2 \phi_m \phi_n \, dx = 0 && (m \neq n)\\
&\qquad\qquad = N_n && (m = n)\\
&\int_0^R GJ\phi_m' \phi_n' \, dx = 0 && (m \neq n)\\
&\qquad\qquad = \mu_n^2 \int_0^R mk_m^2 \phi_n^2 && (m = n)\\
&\qquad\qquad = \mu_n^2 N_n
\end{aligned}\right\} \quad (37)$$

where ω_n and μ_n are the natural circular frequencies of the uncoupled bending and torsion modes, respectively. Second, the constant terms are dropped, since they apply to static deformation of the blade. And third, motion representative of simple harmonic motion is considered by setting

$$a_n = \bar{a}_n \sin \omega t$$

$$b_n = \bar{b}_n \sin \omega t$$

The final equations will be homogeneous, and the vanishing of the determinant of the $\bar{a}_n$ and $\bar{b}_n$ coefficients will define the natural coupled rotating frequencies. This determinant is

$$
\begin{bmatrix}
(\omega_1^2-\omega^2)M_1+A_{11} & A_{12} & A_{13} & -B_{11}-\omega^2C_{11}+\Omega^2D_{11} & -B_{21}-\omega^2C_{21}+\Omega^2D_{21} & -B_{31}-\omega^2C_{31}+\Omega^2D_{31} \\
A_{12} & (\omega_2^2-\omega^2)M_2+A_{22} & A_{23} & -B_{12}-\omega^2C_{12}+\Omega^2D_{12} & -B_{22}-\omega^2C_{22}+\Omega^2D_{22} & -B_{32}-\omega^2C_{32}+\Omega^2D_{32} \\
A_{13} & A_{23} & (\omega_3^2-\omega^2)M_3+A_{33} & -B_{13}-\omega^2C_{13}+\Omega^2D_{13} & -B_{23}-\omega^2C_{23}+\Omega^2D_{23} & -B_{33}-\omega^2C_{33}+\Omega^2D_{33} \\
-B_{11}-\omega^2C_{11}+\Omega^2D_{11} & -B_{12}-\omega^2C_{12}+\Omega^2D_{12} & -B_{13}-\omega^2C_{13}+\Omega^2D_{13} & (\mu_1^2-\omega^2)N_1+E_{11}+\Omega^2F_{11} & E_{12}+\Omega^2F_{12} & E_{13}+\Omega^2F_{13} \\
-B_{21}-\omega^2C_{21}+\Omega^2D_{21} & -B_{22}-\omega^2C_{22}+\Omega^2D_{22} & -B_{23}-\omega^2C_{23}+\Omega^2D_{23} & E_{12}+\Omega^2F_{12} & (\mu_2^2-\omega^2)N_2+E_{22}+\Omega^2F_{22} & E_{23}+\Omega^2F_{23} \\
-B_{31}-\omega^2C_{31}+\Omega^2D_{31} & -B_{32}-\omega^2C_{32}+\Omega^2D_{32} & -B_{33}-\omega^2C_{33}+\Omega^2D_{33} & E_{13}+\Omega^2F_{13} & E_{23}+\Omega^2F_{23} & (\mu_3^2-\omega^2)N_3+E_{33}+\Omega^2F_{33}
\end{bmatrix} = 0
$$

where the coefficients are

$$
\left.
\begin{aligned}
M_n &= \int_0^R m w_n^2 dx \\
N_n &= \int_0^R m k_m^2 \phi_n^2 dx \\
A_{mn} &= \int_0^R T w_m' w_n' \, dx \\
B_{mn} &= \int_0^R T e_A \phi_m w_n'' \, dx \\
C_{mn} &= \int_0^R m e \phi_m w_n \, dx \\
D_{mn} &= \int_0^R m x e \phi_m w_n' \, dx \\
E_{mn} &= \int_0^R T k_A^2 \phi_m \phi_n \, dx \\
F_{mn} &= \int_0^R m\left(k_{m2}^2 - k_{m1}^2 + e e_o\right) \phi_m \phi_n \, dx
\end{aligned}
\right\} \qquad (38)
$$

No numerical evaluation of this example is made, but the importance of some of the new coupling terms of the present theory is realized by

comparing the associated coupling terms which appear in the determinant. For example, $\Omega^2 D_{11}$, which is new, may be compared with $\omega^2 C_{11}$, a conventional term of established importance. The frequencies Ω^2 and ω^2 may be of the same order of magnitude; the factors under the integral are the same except for w_1 and xw_1'. These may be shown to be of the same order of magnitude, however, and so both coupling terms are comparable in magnitude. This is another indication, therefore, that the new coupling terms are of significance in the treatment of rotating blades.

Example 2

The case treated for example 2 is a uniform blade with an offset mass at the tip and with β, v, e_A, and e_o equal 0. (See top sketch in fig. 7.) This system may be regarded as having a behavior similar to an actual helicopter blade which is heavily loaded along the leading edges, as depicted in the lower sketch of figure 7. An approximation to the first two natural frequencies will be found by the modified Galerkin procedure. The differential equations for shear, moment, torque, and tension (eqs. (25), (26), (16), (13), and (8) with $\beta = v = e_A = e_o = 0$) applicable here are

$$\left.\begin{aligned} &-\left[\left(GJ + Tk_A^2\right)\phi'\right]' + \Omega^2 mxew' + \Omega^2 m\left(k_{m2}^2 - k_{m1}^2\right)\phi - \omega^2\left(mew + mk_m^2\phi\right) = 0 \\ &\left(EI_1 w''\right)'' - (Tw')' - \left(\Omega^2 mxe\phi\right)' - \omega^2(mw + me\phi) = 0 \end{aligned}\right\} \quad (39)$$

$$\left.\begin{aligned} M_y &= EI_1 w'' \\ V_z &= -\left(EI_1 w''\right)' + Tw' + \Omega^2 mex\phi \\ Q &= \left(GJ + Tk_A^2\right)\phi' \\ T &= \int_x^R \Omega^2 mx\, dx + \Omega^2 MR \end{aligned}\right\} \quad (40)$$

In these equations the mass per unit length m should be interpreted to apply to both the distributed mass of the beam and to the concentrated offset mass. This concentrated mass can be handled, for example, by imagining the mass to be distributed over an infinitesimal length, say λ,

with intensity M/λ, then to perform the integrations of the Galkerin process as though all quantities involved in the integrations are uniform in this interval, and finally to squeeze the interval down to zero length. An equivalent procedure is to take the concentrated mass into account through means of the Dirac delta function.

With this in mind, equations (39) and (40) are substituted into equations (34a) and (34b); the terms $\phi_n\left(GJ + Tk_A^2\right)\phi'$ and $w_n\left[-(Tw')' - \left(\Omega^2 mxe\phi\right)'\right]$ are integrated once by parts, the term $w_n\left(EI_1 w''\right)''$ is integrated twice by parts, the boundary terms cancel, and the results are the following two equations:

$$\int_0^R \left(GJ+Tk_A^2\right)\phi'\phi_n'\,dx+\int_0^R \left[\underline{\Omega^2 mxew'}+\Omega^2 m\left(k_{m2}^2-k_{m1}^2\right)\phi-\omega^2\left(mew+mk_m^2\phi\right)\right]\phi_n\,dx=0 \tag{41}$$

$$\int_0^R EI_1 w''w_n''\,dx+\int_0^R \left(Tw'+\underline{\Omega^2 mxe\phi}\right)w_n'\,dx-\omega^2\int_0^R \left(mw+me\phi\right)w_n\,dx=0 \tag{42}$$

Approximations to the displacements are now chosen as

$$\left.\begin{aligned}\phi &= \bar{a}_1\phi_1\\ w &= \bar{b}_1 w_1\end{aligned}\right\} \tag{43}$$

where ϕ_1 and w_1 are the fundamental uncoupled vibration modes of the beam without the tip mass, in torsion and bending, respectively, and each is given in terms of a unit tip displacement; these functions satisfy the equations

$$\left.\begin{aligned}&\int_0^R GJ\left(\phi_1'\right)^2 dx = \mu_1^2\int_0^R mk_m^2\phi_1^2 dx = \mu_1^2 mk_m^2\,\frac{R}{2} \qquad \left(\mu_1^2 = \frac{\pi}{2}\,\frac{\sqrt{GJ}}{mk_m^2R^2}\right)\\ &\int_0^R EI_1\left(w_1''\right)^2 dx = \omega_1^2\int_0^R mw_1^2 dx = \omega_1^2\,\frac{mR}{4} \qquad \left(\omega_1^2 = 3.46\sqrt{\frac{EI_1}{mR^4}}\right)\end{aligned}\right\} \tag{44}$$

where m refers only to the mass per unit length of the beam. Equations (43) are now substituted into equations (41) and (42), use is made of equations (44) and the equation for tension (applicable here) $T = \frac{1}{2}\Omega^2 m\left(R^2 - x^2\right) + \Omega^2 MR$, and the integrations are performed with due cognizance being given the offset tip mass; the values found for the integrals are as follows:

$$\left.\begin{aligned}
&\int_0^R GJ\phi_1{}^2 dx = \mu_1{}^2 m k_m{}^2 \frac{R}{2} \\
&\int_0^R \Omega^2 mxew_1{}'\phi_1\, dx = 1.38\Omega^2 Ma \\
&\int_0^R \Omega^2 m\left(k_{m2}{}^2 - k_{m1}{}^2\right)\phi_1{}^2 dx = \Omega^2 Ma^2 \\
&\int_0^R mew_1\phi_1\, dx = Ma \\
&\int_0^R mk_m{}^2\phi_1{}^2 dx = mk_m{}^2 \frac{R}{2} + Ma^2 \\
&\int_0^R EI_1\left(w_1{}''\right)^2 dx = \omega_1{}^2 \frac{mR}{4} \\
&\int_0^R T\left(w_1{}'\right)^2 dx \approx \Omega^2 \frac{4}{15}\left(mR + \frac{4}{3}M\right) \\
&\int_0^R mw_1{}^2 dx = \frac{mR}{4} + M
\end{aligned}\right\} \tag{45}$$

(The contribution of $Tk_A{}^2$ is found neglible in the first integral.) The final equations are given now in nondimensional form

$$\left[\frac{\mu_1{}^2}{\omega_1{}^2}\frac{mRk_m{}^2}{2Ma^2} + \frac{\Omega^2}{\omega_1{}^2} - \frac{\omega^2}{\omega_1{}^2}\left(\frac{mRk_m{}^2}{2Ma^2} + 1\right)\right]\bar{a}_1 + \left(\underline{1.38\frac{\Omega^2}{\omega_1{}^2}} - \frac{\omega^2}{\omega_1{}^2}\right)\frac{\bar{b}_1}{a} = 0$$

$$\left(\underline{1.38\,\frac{\Omega^2}{\omega_1{}^2}} - \frac{\omega^2}{\omega_1{}^2}\right)\bar{a}_1 + \left[\frac{mR}{4M} + \frac{\Omega^2}{\omega_1{}^2}\left(\frac{4}{3} + \frac{4mR}{15M}\right) - \frac{\omega^2}{\omega_1{}^2}\left(1 + \frac{mR}{4M}\right)\right]\frac{\bar{b}_1}{a} = 0$$

The vanishing of the determinant of these equations will yield the natural frequencies. Specific evaluation has been made for the following values:

$$M = \frac{mR}{4}$$

$$\frac{R}{a} = 4$$

$$\frac{k_m}{a} = \sqrt{0.02}$$

$$\frac{\mu_1{}^2}{\omega_1{}^2} = 0.152\,\frac{R^2}{k_m{}^2}$$

and the results are shown in figure 7. Results are shown for three conditions: (a) for vibration of the beam with offset mass in pure bending or pure torsion, (b) for vibration in the conventional coupled sense but with no centrifugal-force coupling (that is, the underlined terms of the equations of this example are omitted), and (c) for vibration with all coupling terms considered (the curves labeled complete in fig. 7). It may be seen that the inclusion of centrifugal-force coupling, which is new in this paper, has a very pronounced influence on the vibration characteristics. In fact, this centrifugal-force coupling seems to be of the same general strength as the conventional offset mass coupling normally considered.

CONCLUDING REMARKS

The differential equations of deformation of a twisted rotating blade under arbitrary loading have been derived. A special feature of the analysis is the consideration of the noncoincidence of the tension, mass, and elastic axes, whereby coupling is allowed to occur in a more general form than heretofore considered. This theory can therefore be used to solve problems in which these effects are significant and to evaluate the less complete theories which perhaps are more easily applied.

The aerodynamic loading considered was left in general form. It can be replaced, however, by whatever terms are appropriate for the case being treated. If these aerodynamic forces are taken as zero, then the loadings for free vibration result.

Because of its usefulness, the energy equation for blade deformation is also presented. Two methods of solution are discussed: one is a modified Galerkin process which makes use of the differential equations; the other is a Rayleigh-Ritz procedure which makes use of the energy expression. Two examples are presented which illustrate the application of both of these procedures.

A discussion of the importance of the new coupling terms that arise is made and their significance is further brought out by the examples. The indications are that the centrifugal-force coupling may be as important as the mass coupling that is normally considered in beam analysis and therefore should be included as a regular part in the treatment of rotating blades.

Langley Aeronautical Laboratory,
National Advisory Committee for Aeronautics,
Langley Field, Va., October 5, 1956.

APPENDIX A

DERIVATION OF LONGITUDINAL STRAINS

In this appendix the equation is derived for the longitudinal strain that is developed when a twisted beam undergoes both lateral and twisting deformations. Consider an imaginary plane to cut through the beam perpendicular to the elastic axis; the location of a fiber f of the cross section, both before and after the deformation, may then be given according to the following sketches:

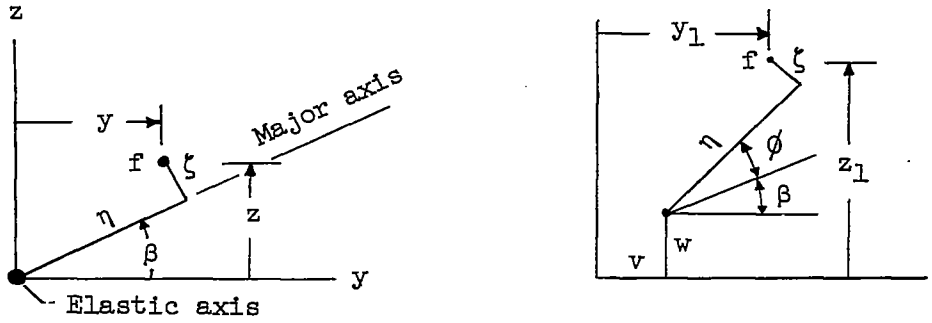

The x-axis is normal to the paper and is made coincident with the undeformed position of the elastic axis. In terms of the distance η along the major axis, the distance ζ perpendicular to this axis, and the built-in twist β, the initial y- and z-positions of the fiber and the rate of change of these positions with respect to the x are

$$\left.\begin{aligned} y &= \eta \cos \beta - \zeta \sin \beta \\ z &= \eta \sin \beta + \zeta \cos \beta \end{aligned}\right\} \tag{A1}$$

$$\left.\begin{aligned} y' &= -\eta\beta' \sin \beta - \zeta\beta' \cos \beta = -\beta' z \\ z' &= \eta\beta' \cos \beta - \zeta\beta' \sin \beta = \beta' y \end{aligned}\right\} \tag{A2}$$

Now consider beam displacements to occur so that the point of intersection of the elastic axis and the cutting plane moves the distances u, v, and w in the directions of x, y, and z, respectively, and so that the cutting plane remains perpendicular to the elastic axis and rotates around it by an angle ϕ. Then if the usual small-angle assumptions that $\cos(\beta + \phi) = \cos \beta - \phi \sin \beta$ and $\sin(\beta + \phi) = \sin \beta + \phi \cos \beta$ are made, the new position of the fiber is defined by the following equations:

$$\left.\begin{aligned}
x_1 &= x + u - v'\left(y_1 - v\right) - w'\left(z_1 - w\right) = x + \mu - v'y - w'z \\
y_1 &= v + \eta(\cos\beta - \phi\sin\beta) - \zeta(\sin\beta + \phi\cos\beta) = v + y - z\phi \\
z_1 &= w + \eta(\sin\beta + \phi\cos\beta) + \zeta(\cos\beta - \phi\sin\beta) = w + z + y\phi
\end{aligned}\right\} \tag{A3}$$

and the derivatives of x_1, y_1, and z_1 with respect to x are given as follows:

$$\left.\begin{aligned}
x_1' &= 1 + u' - v''y + v'\beta'z - w''z - w'\beta'y = 1 + u' - y(v'' + \beta'w') - z(w'' - \beta'v') \\
y_1' &= v' - \beta'z - \beta'y\phi - z\phi' = v' - y\beta'\phi - z(\beta' + \phi') \\
z_1' &= w' + \beta'y - \beta'z\phi + y\phi' = w' + y(\beta' + \phi') - z\beta'\phi
\end{aligned}\right\} \tag{A4}$$

The longitudinal strain that is developed in a fiber may be found from these equations by considering the amount an elemental fiber of length ds changes in length as a result of deformation. In terms of the differential components of length in the x-, y-, and z-directions, the final length ds_1 of a fiber is given by the following equation:

$$ds_1^2 = dx_1^2 + dy_1^2 + dz_1^2 \tag{A5}$$

Thus

$$\left(\frac{ds_1}{dx}\right)^2 = \left(x_1'\right)^2 + \left(y_1'\right)^2 + \left(z_1'\right)^2 \tag{A6}$$

which becomes with the use of equations (A4)

$$\begin{aligned}
\left(\frac{ds_1}{dx}\right)^2 = 1 + 2\left[u' - y(v'' + \beta'w') - z(w'' - \beta'v')\right] + z^2\beta'^2 - \\
2z\beta'(v' - y\beta'\phi - z\phi') + y^2\beta'^2 + 2y\beta'(w' + y\phi' - z\beta'\phi)
\end{aligned} \tag{A7}$$

or

$$\frac{ds_1}{dx} = \left\{1 + \left(y^2 + z^2\right)(\beta')^2 + 2\left[u' - yv'' - zw'' + \left(y^2 + z^2\right)\beta'\phi'\right]\right\}^{1/2} \tag{A8}$$

Now the analogous equation for the original length ds may be determined directly from equation (A8) by letting $u = v = w = \phi = 0$. Thus

$$\frac{ds}{dx} = \left[1 + \left(y^2 + z^2\right)(\beta')^2\right]^{1/2} \tag{A9}$$

The tensile strain in the fiber can now be written

$$\epsilon = \frac{ds_1 - ds}{ds}$$

$$= \frac{ds_1}{ds} - 1$$

$$= \left\{1 + \left[\frac{2}{1 + \left(y^2 + z^2\right)(\beta')^2}\right]\left[u' - yv'' - zw'' + \left(y^2 + z^2\right)\beta'\phi'\right]\right\}^{1/2} - 1$$

$$= \left[\frac{1}{1 + \left(y^2 + z^2\right)\beta'^2}\right]\left[u' - yv'' - zw'' + \left(y^2 + z^2\right)\beta'\phi'\right] \tag{A10}$$

Now with $\left(y^2 + z^2\right)(\beta')^2 \ll 1$ (say less than 0.03 to 0.04, which is generally the case), then

$$\epsilon = u' - yv'' - zw'' + \left(y^2 + z^2\right)\beta'\phi' \tag{A11}$$

Use is now made of equations (A1) in order to express the strain in terms of the cross-sectional coordinates η and ζ as follows:

$$\epsilon = u' - \eta(v''\cos\beta + w''\sin\beta) - \zeta(-v''\sin\beta + w''\cos\beta) + \left(\eta^2 + \zeta^2\right)\beta'\phi' \tag{A12}$$

It is convenient now to eliminate the strain component u'; this is done by making use of the equilibrium condition that the integral of the longitudinal stress over the cross section must be equal to the total tension. Thus, with the assumption that the cross section is symmetrical about the major principle axis, the following equation applies:

$$T = E\int_{\eta_{te}}^{\eta_{le}}\int_{-t/2}^{t/2} \epsilon \, d\zeta \, d\eta$$

$$= E\int_{\eta_{te}}^{\eta_{le}}\int_{-t/2}^{t/2} \Big[u' - \eta(v''\cos\beta + w''\sin\beta) - \zeta(-v''\sin\beta + w''\cos\beta) +$$

$$\left(\eta^2 + \zeta^2\right)\beta'\phi'\Big] d\zeta \, d\eta \tag{A13}$$

or

$$T = E\left[Au' - Ae_A(v''\cos\beta + w''\sin\beta) + Ak_A{}^2\beta'\phi'\right] \tag{A14}$$

This equation yields

$$u' = \frac{T}{EA} + e_A(v''\cos\beta + w''\sin\beta) + k_A{}^2\beta'\phi' \tag{A15}$$

If T/EA is denoted by the tensile strain ϵ_T, then equation (A15) combined with equation (A12) yields

$$\epsilon = \epsilon_T + \left(e_A - \eta\right)(v''\cos\beta + w''\sin\beta) + \zeta(v''\sin\beta - w''\cos\beta) + \left(\eta^2 + \zeta^2 - k_A{}^2\right)\beta'\phi' \tag{A16}$$

which is the complete expression for the strain of any fiber in the cross section.

Expression for Strain in Terms of Displacements in and Normal to the Blade Chord

Because of apparent anomalies that have arisen in the past, it is of interest to show the development of the strain in terms of displacements in and normal to the blade chord. These displacements have been used by some investigators and are shown in relation to the displacements of this paper in the following sketch:

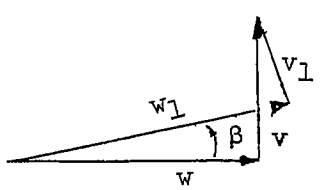

These displacements are related according to the equations

$$\left.\begin{aligned} v &= v_1\cos\beta - w_1\sin\beta \\ w &= v_1\sin\beta + w_1\cos\beta \end{aligned}\right\} \tag{A17}$$

If two derivatives of these equations are taken, and due care is given the fact that β may vary with x, then the following combination of these derivatives may be found:

$$\left.\begin{aligned} v''\cos\beta + w''\sin\beta &= v_1'' - 2\beta' w_1' - \beta'' w_1 - (\beta')^2 v_1 \\ -v''\sin\beta + w''\cos\beta &= w_1'' + 2\beta' v_1' + \beta'' v_1 - (\beta')^2 w_1 \end{aligned}\right\} \tag{A18}$$

If these expressions are now substituted in equation (A16), then the equation for strain becomes

$$\begin{aligned} \epsilon = \epsilon_T &+ \left(e_A - \eta\right)\left[v_1'' - 2\beta' w_1' - \beta'' w_1 - (\beta')^2 v_1\right] - \\ &\zeta\left[w_1'' + 2\beta' v_1' + \beta'' v_1 - (\beta')^2 w_1\right] + \left(\eta^2 + \zeta^2 - k_A^2\right)\beta'\phi' \end{aligned} \tag{A19}$$

The interesting fact to be noted here with respect to v_1 and w_1 is that the strain is not proportional only to the derivatives v_1'' and w_1'', as might first be supposed, but rather to additional terms which involve the rate of change of initial twist.

This observation has some significance. If the analysis of this paper had been carried through in terms of displacements v_1 and w_1, then the moments and all the results would be in terms of the group of terms appearing on the right-hand side of equations (A18), and the final result would be in agreement with the results presented in reference 11. This consideration indicates that the treatment in reference 1 may be subject to correction, since the assumption is made in this reference that the moments are proportional to v_1'' and w_1''. Evidently this assumption is not valid when the beam has a finite rate of change of initial twist.

Strain When ϕ Is Not Small

The preceding derivation was made on the assumption that the displacements u, v, w, and ϕ were small, and a linear equation for strain results. An interesting observation may be made, however, for the case of $v = w = 0$, but with large displacements in ϕ, such that nonlinear effects are present. Thus, if the derivation is repeated with ϕ considered large, and with $v = w = 0$, then equation (A11) would take the form

$$\begin{aligned} \epsilon &= u' + \left(y^2 + z^2\right)\left[\beta'\phi' + \frac{1}{2}(\phi')^2\right] \\ &= u' + \left(\eta^2 + \zeta^2\right)\left[\beta'\phi' + \frac{1}{2}(\phi')^2\right] \end{aligned} \tag{A20}$$

The strain component u' is now handled as before, and the equation for strain becomes

$$\epsilon = \epsilon_T + \left(\eta^2 + \zeta^2 - k_A{}^2\right)\left[\beta'\phi' + \frac{1}{2}(\phi')^2\right] \tag{A21}$$

This equation may be used to demonstrate the fact pointed out in reference 19 that pretwisted blades may possess a torsional instability. Thus if use is made of equation (5), and the stress is based on equation (A21), then the following equation for internal elastic resisting torque results:

$$Q = GJ\phi' + Tk_A{}^2(\beta' + \phi') + EB_1\left[\beta'\phi' + \frac{1}{2}(\phi')^2\right](\beta' + \phi')$$

$$= GJ\phi' + Tk_A{}^2(\beta' + \phi') + \frac{EB_1}{2}\left[(\beta' + \phi')^3 - (\beta')^2(\beta' + \phi')\right] \tag{A22}$$

Observations similar to those made in reference 19 may be made about equation (A22) with respect to the possibility of torsional instability; as a matter of fact, if the net tension over the cross section is zero, the equation becomes similar to equation (2) presented and discussed in reference 19.

APPENDIX B

DERIVATION OF ACCELERATIONS AND INERTIA LOADINGS

The purpose of this appendix is to derive the acceleration of a mass particle of the twisted rotating blade and to derive the inertia loadings from this acceleration. In order to do this it is convenient to introduce the fixed X,Y,Z coordinate axes system shown in the following sketch:

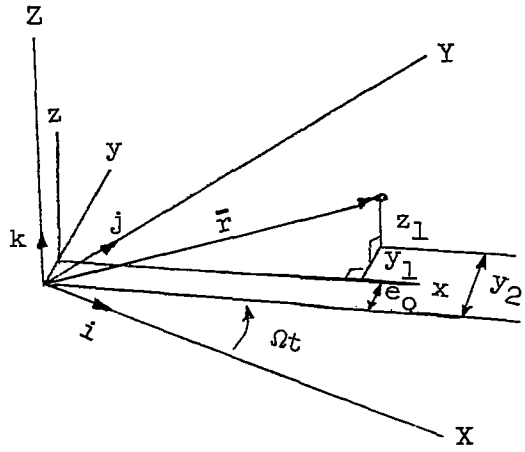

This sketch also shows the rotating x,y,z axes system (used in the body of the report and in appendix A) and the deformed positions x_1, y_1, and z_1 of the mass particle (see eqs. (A3)). The azimuth position of the rotating system relative to the fixed-axes system is denoted by Ωt.

In terms of the unit vectors i, j, and k, the vector $\bar{r}$ may be written

$$\bar{r} = \left(x_1 \cos \Omega t - y_2 \sin \Omega t\right)i + \left(x_1 \sin \Omega t + y_2 \cos \Omega t\right)j + z_1 k \tag{B1}$$

Differentiating with respect to time gives the velocity vector of the mass particle

$$\dot{\bar{r}} = \left(\dot{x}_1 \cos \Omega t - \Omega x_1 \sin \Omega t - \dot{y}_2 \sin \Omega t - \Omega y_2 \cos \Omega t\right)i + \left(\dot{x}_1 \sin \Omega t + \Omega x_1 \cos \Omega t + \dot{y}_2 \cos \Omega t - \Omega y_2 \sin \Omega t\right)j + \dot{z}_1 k \tag{B2}$$

and differentiating once again gives the acceleration

$$\ddot{\bar{r}} = \Big[\left(\ddot{x}_1 - \Omega\dot{y}_2\right)\cos\Omega t - \Omega\left(\dot{x}_1 - \Omega y_2\right)\sin\Omega t - \left(\ddot{y}_2 + \Omega\dot{x}_1\right)\sin\Omega t -$$

$$\Omega\left(\dot{y}_2 + \Omega x_1\right)\cos\Omega t\Big]i + \Big[\left(\ddot{x}_1 - \Omega\dot{y}_2\right)\sin\Omega t + \Omega\left(\dot{x}_1 - \Omega y_2\right)\cos\Omega t +$$

$$\left(\ddot{y}_2 + \Omega\dot{x}_1\right)\cos\Omega t - \Omega\left(\dot{y}_2 + \Omega x_1\right)\sin\Omega t\Big]j + \ddot{z}_1 k \tag{B3}$$

The components a_x, a_y, and a_z of the acceleration vector in the x-, y-, and z-directions may be found from this equation by letting $t = 0$, thus

$$\ddot{\bar{r}}_1 = \left(\ddot{x}_1 - \Omega^2 x_1 - 2\Omega\dot{y}_2\right)i + \left(\ddot{y}_2 - \Omega^2 y_2 + 2\Omega\dot{x}_1\right)j + \ddot{\zeta}_1 k$$

$$= a_x i + a_y j + a_z k \tag{B4}$$

Use is now made of equations (A3) and the fact that $y_2 = y_1 + e_o$. Thus,

$$x_1 = x + u - v'y - w'z$$

$$y_2 = v + y - z\phi + e_o$$

$$z_1 = w + z + y\phi$$

The first two derivatives with respect to time are given as follows:

$$\left.\begin{aligned} \dot{x}_1 &= \dot{u} - \dot{v}'y - \dot{w}'z \\ \dot{y}_2 &= \dot{v} - z\dot{\phi} \\ \dot{z}_1 &= \dot{w} + y\dot{\phi} \end{aligned}\right\} \tag{B5}$$

$$\left.\begin{aligned}
\ddot{x}_1 &= \ddot{u} - \ddot{v}'y - \ddot{w}'z \\
\ddot{y}_2 &= \ddot{v} - z\ddot{\phi} \\
\ddot{z}_1 &= \ddot{w} + y\ddot{\phi}
\end{aligned}\right\} \tag{B6}$$

Substitution of these equations into equation (B4) yields the desired acceleration vector, with the following components in the x-, y-, and z-directions:

$$\left.\begin{aligned}
a_x &= \ddot{u} - \ddot{v}'y - \ddot{w}'z - \Omega^2(x + u - v'y - w'z) - 2\Omega(\dot{v} - z\dot{\phi}) \\
a_y &= \ddot{v} - z\ddot{\phi} - \Omega^2(v + y - z\phi + e_o) + 2\Omega(\dot{u} - \dot{v}'y - \dot{w}'z) \\
a_z &= \ddot{w} + y\ddot{\phi}
\end{aligned}\right\} \tag{B7}$$

By substitution of the expressions (A1) for y and z, the accelerations of the particle are obtained as follows in terms of the coordinates of the cross-section ζ and η:

$$\left.\begin{aligned}
a_x = {} & \ddot{u} - \Omega^2(x + u) - 2\Omega v + \eta\Big[-\ddot{v}' \cos\beta - \ddot{w}' \sin\beta + \\
& \Omega^2(v' \cos\beta + w' \sin\beta) + 2\Omega\dot{\phi} \sin\beta\Big] + \zeta\Big[\ddot{v}' \sin\beta - \\
& \ddot{w}' \cos\beta + \Omega^2(-v' \sin\beta + w' \cos\beta) + 2\Omega\dot{\phi} \cos\beta\Big] \\
a_y = {} & \ddot{v} - \Omega^2(v + e_o) + 2\Omega\dot{u} + \eta\Big[-\ddot{\phi} \sin\beta - \Omega^2(\cos\beta - \phi \sin\beta) + \\
& 2\Omega(-\dot{v}' \cos\beta - \dot{w}' \sin\beta)\Big] + \zeta\Big[-\ddot{\phi} \cos\beta - \\
& \Omega^2(-\sin\beta - \phi \cos\beta) + 2\Omega(\dot{v}' \sin\beta - \dot{w}' \cos\beta)\Big] \\
a_z = {} & \ddot{w} + \eta\ddot{\phi} \cos\beta - \zeta\ddot{\phi} \sin\beta
\end{aligned}\right\} \tag{B8}$$

The inertia loadings on the beam may now be derived from these acceleration equations by appropriate integrations over the cross section. The total or resultant loadings desired in the analysis given in the body of this paper are the sum of the inertia loadings and the applied loadings, and are given by the following equations, when the assumption is made that the cross section is symmetrical about the major principal axis:

$$\left.\begin{aligned}
\bar{p}_x &= -\int_{\eta_{te}}^{\eta_{le}} \int_{-t/2}^{t/2} a_x \rho \, d\zeta \, d\eta \\
\bar{p}_y &= L_y - \int_{\eta_{te}}^{\eta_{le}} \int_{-t/2}^{t/2} a_y \rho \, d\zeta \, d\eta \\
\bar{p}_z &= L_z - \int_{\eta_{te}}^{\eta_{le}} \int_{-t/2}^{t/2} a_z \rho \, d\zeta \, d\eta \\
\bar{q}_x &= M - \int_{\eta_{te}}^{\eta_{le}} \int_{-t/2}^{t/2} \left[-a_y(z_1 - w) + a_z(y_1 - v)\right] \rho \, d\zeta \, d\eta \\
\bar{q}_y &= -\int_{\eta_{te}}^{\eta_{le}} \int_{-t/2}^{t/2} \left[-a_x(z_1 - w)\right] \rho \, d\zeta \, d\eta \\
\bar{q}_z &= -\int_{\eta_{te}}^{\eta_{le}} \int_{-t/2}^{t/2} \left[-a_x(y_1 - v)\right] \rho \, d\zeta \, d\eta
\end{aligned}\right\} \qquad \text{(B9)}$$

where ρ is the density of the structural material and may be a function of ζ and η. If the integrations are performed with the use of equations (B8), the following loadings are found:

$$\bar{p}_x = -m\left[\ddot{u} - \Omega^2(x + u) - 2\Omega\dot{v}\right] - me\left[-\ddot{v}'\cos\beta - \ddot{w}'\sin\beta + \Omega^2(v'\cos\beta + w'\sin\beta) + 2\Omega\dot{\phi}\sin\beta\right] \tag{B10}$$

$$\bar{p}_y = L_y - m\left[\ddot{v} - \Omega^2(v + e_o) + 2\Omega\dot{u}\right] - me\left[-\ddot{\phi}\sin\beta - \Omega^2(\cos\beta - \phi\sin\beta) + 2\Omega(-\dot{v}'\cos\beta - \dot{w}'\sin\beta)\right] \tag{B11}$$

$$\bar{p}_z = L_z - m(\ddot{w}) - me\ddot{\phi}\cos\beta \tag{B12}$$

$$\bar{q}_x = M - \Omega^2 me\left[(v + e_o)\sin\beta + e_o\phi\cos\beta\right] + me(\ddot{v}\sin\beta - \ddot{w}\cos\beta + 2\Omega\dot{u}\sin\beta) - \Omega^2 m\left[\left(k_{m2}^2 - k_{m1}^2\right)\sin\beta\cos\beta + \left(k_{m2}^2 - k_{m1}^2\right)\phi\cos 2\beta\right] - \ddot{\phi}mk_m^2 - 2\Omega m\left(k_{m2}^2 - k_{m1}^2\right)\dot{v}'\cos\beta\sin\beta - 2\Omega m\left(k_{m2}^2\sin^2\beta + k_{m1}^2\cos^2\beta\right)\dot{w}' \tag{B13}$$

$$\bar{q}_y = -\Omega^2 me\left[(x + u)\sin\beta + x\phi\cos\beta\right] + me(\ddot{u}\sin\beta - 2\Omega\dot{v}\sin\beta) + \Omega^2 m\left[\left(k_{m2}^2 - k_{m1}^2\right)v'\sin\beta\cos\beta + \left(k_{m2}^2\sin^2\beta + k_{m1}^2\cos^2\beta\right)w'\right] - m\left(k_{m2}^2 - k_{m1}^2\right)\ddot{v}'\sin\beta\cos\beta + m\left(k_{m2}^2\sin^2\beta + k_{m1}^2\cos^2\beta\right)(2\Omega\dot{\phi} - \ddot{w}') \tag{B14}$$

$$\bar{q}_z = -\Omega^2 me\left[(x + u)\cos\beta - x\phi\sin\beta\right] + me(\ddot{u}\cos\beta - 2\Omega\dot{v}\cos\beta) +$$
$$\Omega^2 m\left[\left(k_{m2}^2 - k_{m1}^2\right)w'\sin\beta\cos\beta + \left(k_{m2}^2\cos^2\beta + k_{m1}^2\sin^2\beta\right)v'\right] -$$
$$m\left(k_{m2}^2 - k_{m1}^2\right)\ddot{w}'\sin\beta\cos\beta - m\left(k_{m2}^2\cos^2\beta + k_{m1}^2\sin^2\beta\right)\ddot{v}' +$$
$$2\Omega m\left(k_{m2}^2 - k_{m1}^2\right)\dot{\phi}\sin\beta\cos\beta \tag{B15}$$

Equations (B10) to (B15) give the general expressions for the loadings and contain many terms of second order which for most engineering purposes can be neglected. In equation (B10), for example, all other terms are small in comparison to $m\Omega^2 x$, which is the conventional expression for $\bar{p}_x$ (note that $\bar{p}_x \doteq -T'$); for most practical purposes these small terms may therefore be neglected. For any specific application, however, particularly in the case of unusual configurations, the relative magnitude and importance of the terms should be determined. In the case of conventional helicopter or propeller blades, it is believed that the following first-order reductions of equations (B10) to (B15) are suitable for most engineering applications:

$$\left.\begin{aligned}
\bar{p}_x &= -T' = m\Omega^2 x \\
\bar{p}_y &= L_y - m\left[\ddot{v} - \Omega^2(v + e_o)\right] + me\left[\ddot{\phi}\sin\beta + \Omega^2(\cos\beta - \phi\sin\beta)\right] \\
\bar{p}_z &= L_z - m\left(\ddot{w} + e\ddot{\phi}\cos\beta\right) \\
\bar{q}_x &= M - \Omega^2 me\left[(v + e_o)\sin\beta + e_o\phi\cos\beta\right] + \\
&\quad me(\ddot{v}\sin\beta - \ddot{w}\cos\beta) - \Omega^2 m\left(k_{m2}^2 - k_{m1}^2\right)(\sin\beta\cos\beta + \\
&\quad \phi\cos 2\beta) - mk_m^2\ddot{\phi} \\
\bar{q}_y &= -\Omega^2 mex(\sin\beta + \phi\cos\beta) \\
\bar{q}_z &= -\Omega^2 mex(\cos\beta - \phi\sin\beta)
\end{aligned}\right\} \tag{B16}$$

where

$$k_m^2 = k_{m2}^2 + k_{m1}^2$$

REFERENCES

1. Mendelson, Alexander, and Gendler, Selwyn: Analytical and Experimental Investigation of Effect of Twist on Vibrations of Cantilever Beams. NACA TN 2300, 1951.

2. Zickel, J.: General Theory of Pretwisted Beams and Columns. Tech. Rep. No. 73 (Contract N7onr-35801, Column Res. Council, and R. I. Dept. Public Works), Brown Univ., Graduate Div. Appl. Math., June 1952.

3. Zickel, J.: Buckling of Pretwisted Columns. Tech. Rep. No. 74 (Contract N7onr-35801), Brown Univ., Graduate Div. Appl. Math., June 1952.

4. Zickel, J.: Bending of Pretwisted Beams. Tech. Rep. No. 77 (Contract N7onr-35801), Brown Univ., Graduate Div. Appl. Math., Aug. 1952.

5. Yntema, Robert T.: Simplified Procedures and Charts for the Rapid Estimation of Bending Frequencies of Rotating Beams. NACA TN 3459, 1955. (Supersedes NACA RM L54G02.)

6. Flax, Alexander H.: The Bending of Rotor Blades. Jour. Aero. Sci., vol. 14, no. 1, Jan. 1947, pp. 42-50.

7. Daughaday, H., and Klein, J.: An Approach to the Determination of Higher Harmonic Rotor Blade Stresses. Proc. Ninth Annual Forum, Am. Helicopter Soc., Inc., May 14-17, 1953. pp. 90-126.

8. Flax, A. H., and Goland, L.: Dynamic Effect in Rotor Blade Bending. Jour. Aero. Sci., vol. 18, no. 12, Dec. 1951, pp. 813-829.

9. Wood, R. McKinnon, and Perring, W. G. A.: Stresses and Strains in Airscrews With Particular Reference to Twist. R. & M. No. 1274, British A.R.C., 1929.

10. Sterne, L. H. G.: The Structural Aspects of Propeller Design. Report No. Structures 5, British R.A.E., July, 1947.

11. DiPrima, R. C., and Handelman, G. H.: Vibrations of Twisted Beams. Quarterly Appl. Math., vol. XII, no. 3, Oct. 1954, pp. 241-259.

12. Mendelson, Alexander: Effect of Centrifugal Force on Flutter of Uniform Cantilever Beam at Subsonic Speeds With Application to Compressor and Turbine Blades. NACA TN 1893, 1949.

13. Arnoldi, Walter E.: Response of a Rotating Propeller to Aerodynamic Excitation. NACA RM 8I07, 1949.

14. DeVries, J. A., and Stulen, F. B.: A Complete Matrix Solution for the Vibratory Bending Moments of a Propeller Blade Subjected to a Pure First Order Aerodynamic Excitation. Rep. No. C-2152, Curtiss-Wright Corp., Propeller Div. (Caldwell, N. J.), May 16, 1950.

15. Turner, M. J., and Duke, James B.: Propeller Flutter. Jour. Aero. Sci., vol. 16, no. 6, June 1949, pp. 323-336.

16. Love, E. R., and Silberstein, J. P. O. (Assisted by J. R. M. Radok): Vibration of Stationary and Rotating Propellers. Rep. ACA-36, Australian Council for Aeronautics, June 1947.

17. Timoshenko, S., and Goodier, J. N.: Theory of Elasticity. Second ed., McGraw-Hill Book Co., Inc., 1951, pp. 333-336.

18. Rosenberg, Reinhardt: Aero-Elastic Instability in Unbalanced Lifting Rotor Blades. Jour. Aero. Sci., vol. 11, no. 4, Oct. 1944, pp. 361-368.

19. Niedenfuhr, F. W.: On the Possibility of Aeroelastic Reversal of Propeller Blades. Jour. Aero. Sci. (Readers' Forum), vol. 22, no. 6, June 1955, pp. 438-440.

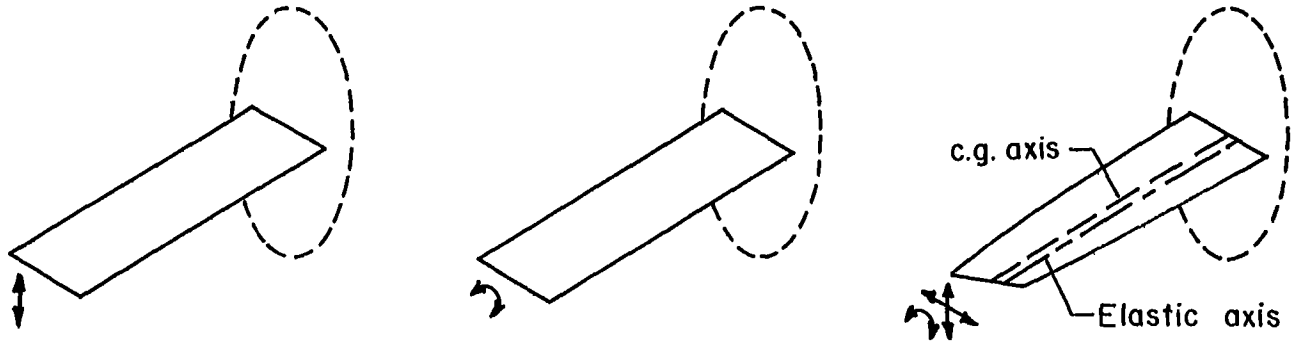

(a) Nonrotating beams.

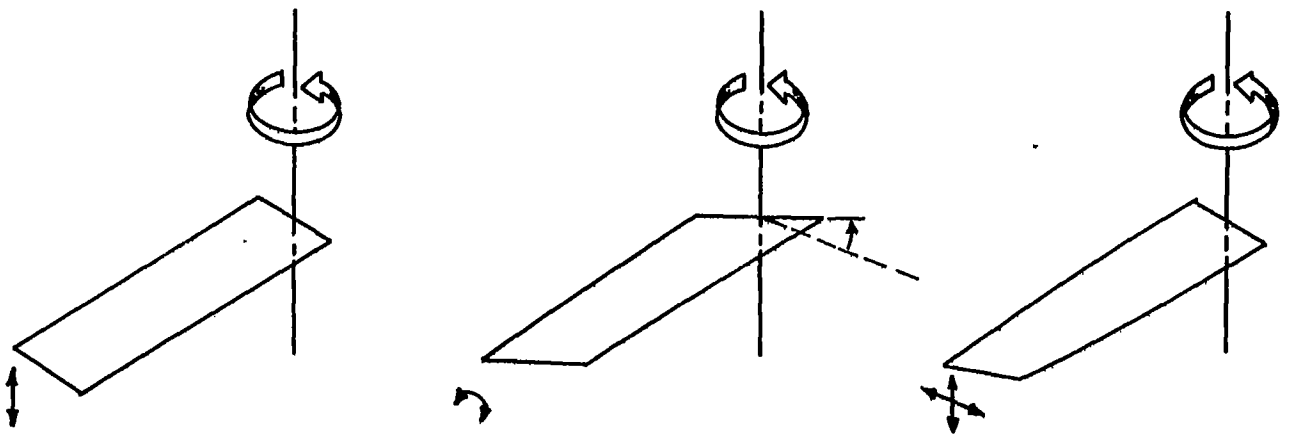

(b) Rotating beams.

Figure 1.- Cases treated in previous theory.

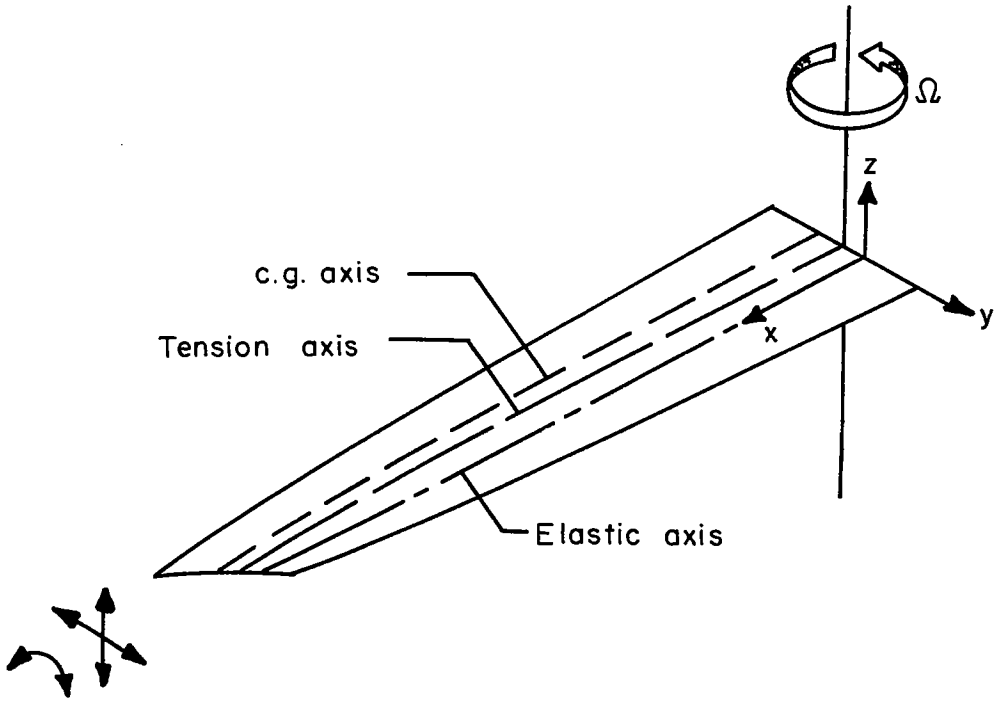

Figure 2.- Present theory. Case of coupled bending-torsion of twisted rotating beam.

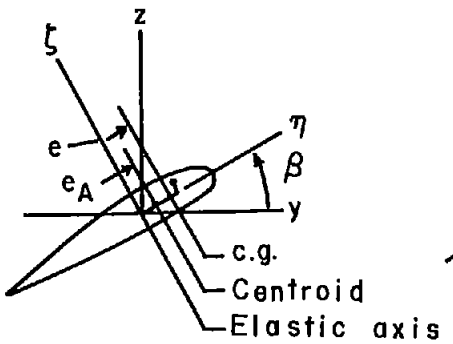

(a) Coordinates.

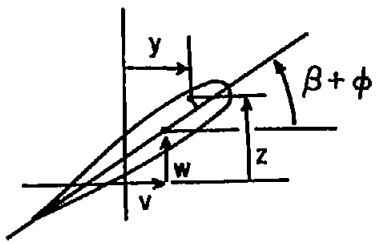

(b) Displacements.

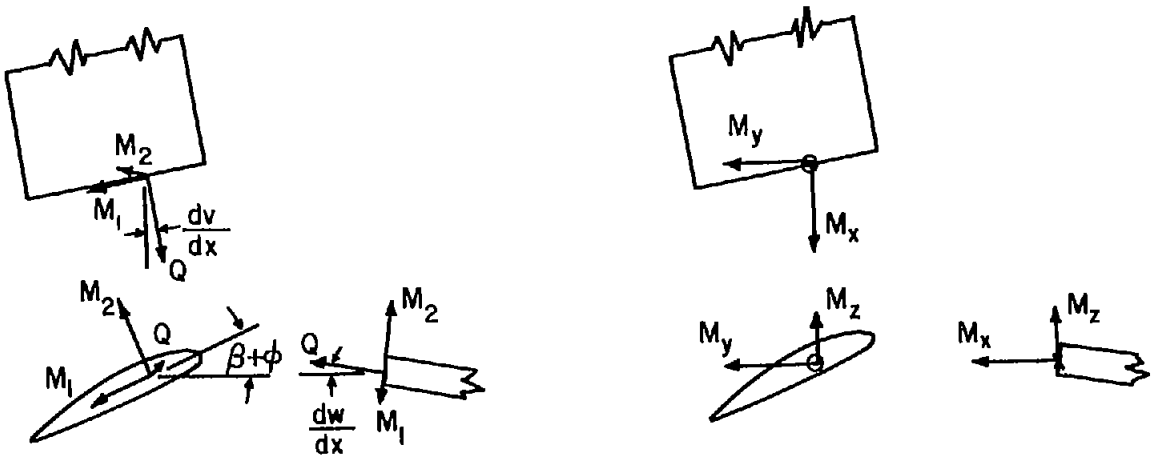

(c) Moments.

Figure 3.- Nomenclature.

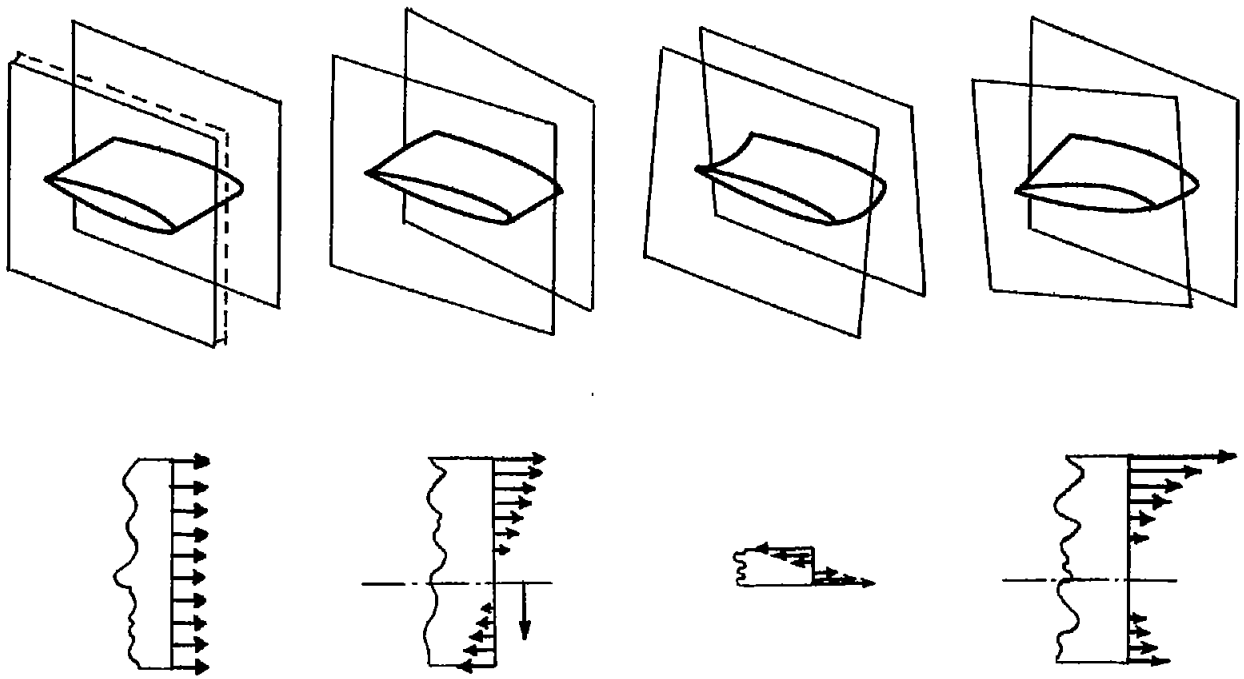

$$\epsilon = \frac{du}{dx} - \eta\left(\frac{d^2v}{dx^2}\cos\beta + \frac{d^2w}{dx^2}\sin\beta\right) - \zeta\left(-\frac{d^2v}{dx^2}\sin\beta + \frac{d^2w}{dx^2}\cos\beta\right) + (\eta^2+\zeta^2)\frac{d\beta}{dx}\frac{d\phi}{dx}$$

Figure 4.- Strains.

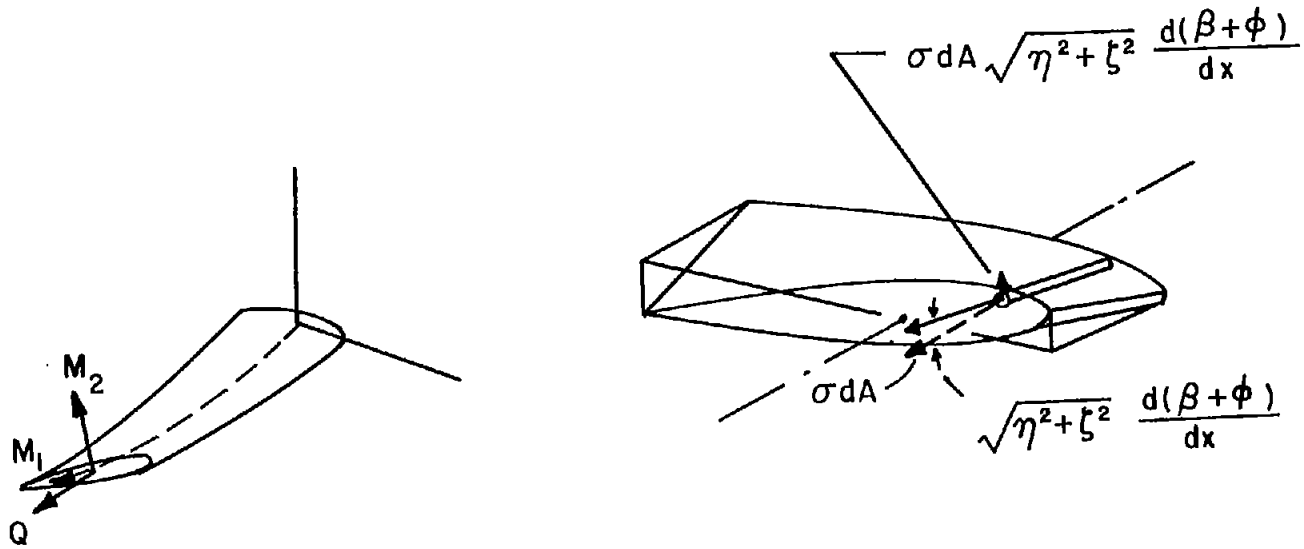

Figure 5.- Internal elastic moments.

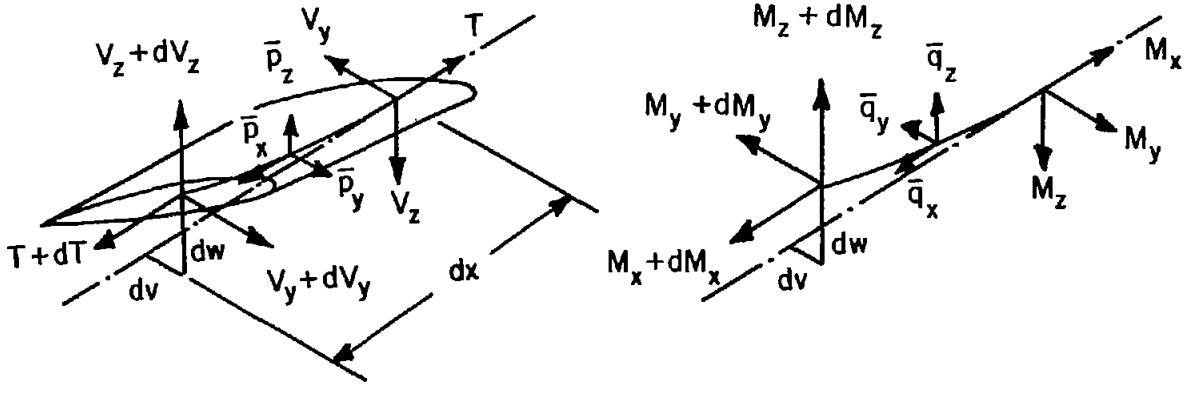

(a) Forces. (b) Moments.

Figure 6.- Equilibrium of forces and moments.

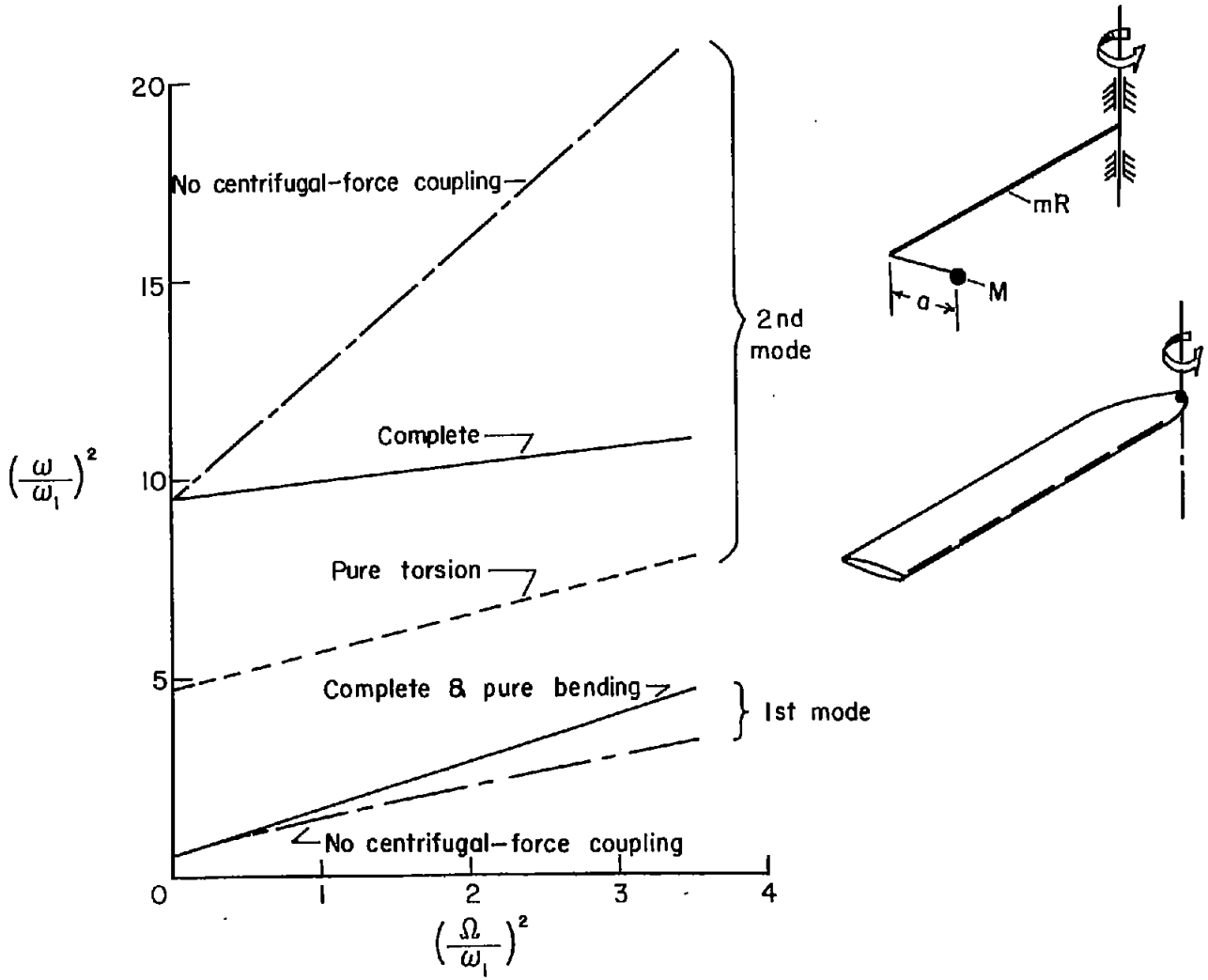

Figure 7.- Natural frequencies of example 2 showing the importance of centrifugal-force coupling.

NACA - Langley Field, Va.