NACA TN 3932

NATIONAL ADVISORY COMMITTEE FOR AERONAUTICS

TECHNICAL NOTE 3932

AN INVESTIGATION OF HIGH-TEMPERATURE VACUUM AND HYDROGEN FURNACE BRAZING

By Walter E. Russell and John P. Wisner

Lewis Flight Propulsion Laboratory
Cleveland, Ohio

LIBRARY COPY

MAR 19 1957

LANGLEY AERONAUTICAL LABORATORY
LIBRARY, NACA
LANGLEY FIELD, VIRGINIA

Washington
March 1957

FOR REFERENCE

NOT TO BE TAKEN FROM THIS ROOM

3 1176 01434 0880

NATIONAL ADVISORY COMMITTEE FOR AERONAUTICS

TECHNICAL NOTE 3932

AN INVESTIGATION OF HIGH-TEMPERATURE VACUUM AND HYDROGEN FURNACE BRAZING

By Walter E. Russell and John P. Wisner

5058

SUMMARY

The vacuum and the hydrogen brazing of four heat-resistant alloys with two types of high-temperature brazing alloy were investigated. The effect of time at two brazing temperatures on the 1200° F shear strength of joints and on the base-metal properties was studied.

Brazing techniques were evaluated for alloys that can be age hardened and that contain titanium and aluminum in a vacuum as well as in dry hydrogen.

In general, results showed that of the two brazing alloys used, the boron-free alloy was less damaging to base metal than the boron-bearing alloy, but that shear joints made with the boron-bearing braze were stronger. Although it was thought that the primary difference between the alloys was boron content, the higher carbon of the boron-bearing alloy may be significant.

Furnace brazing temperatures and time at temperatures were important factors in lowering the tensile strength and elongation of braze-coated sheet-metal tensile specimens. The effects varied depending on the base metal and the brazing alloy used.

Shear specimens of all four base alloys brazed in hydrogen with both types of brazing alloy exhibited erratic joint coverage by the brazing alloys. The data indicated, however, that if joint coverage was complete, vacuum and hydrogen brazing produced joint shear strengths of about the same magnitude.

INTRODUCTION

During the last five years, interest in high-temperature brazing of heat-resistant alloys has been growing steadily. Advancements in dry-hydrogen furnace-brazing techniques have attracted the attention of engineers and designers in many fields of engineering. With furnace brazing it is possible to fabricate intricate parts and assemblies that would be otherwise impossible. The use of light-weight sheet-metal components for turbojet engines, now being evaluated by research groups throughout the country, depends largely on successful furnace brazing.

High-temperature furnace brazing of thin sheet-metal assemblies at the NACA Lewis laboratory revealed a serious problem. Though little difficulty was encountered in obtaining adequate joint coverage and joint shear strength, testing and subsequent metallographic studies revealed damaging effects on the base metal. The diffusion of the braze alloy into the base metal resulted in a considerable reduction in the strength and ductility of the base metal. This undesirable effect on base-metal strength and ductility indicated a need for changes in the furnace brazing process, or, perhaps a less susceptible base metal or a less damaging braze composition.

Consequently, a correlative study was designed with the following purposes:

(1) To investigate the effect of various brazing temperatures on the tensile strength of sheet specimens coated with braze and on the shear strength of brazed joints

(2) To investigate the effect of time at the brazing temperature on the tensile strength of sheet specimens coated with braze and on the shear strength of brazed joints

(3) To determine ways to minimize base-metal damage and yet provide adequate shear joint coverage and strength

Four base metals, two commercial brazing alloys, two brazing temperatures, and two controlled times at each brazing temperature were investigated. These variables were studied in both vacuum and hydrogen brazing atmospheres.

APPARATUS AND MATERIALS

Brazing Alloys

Silicon and boron are additives for reducing the melting temperature of heat-resistant brazing alloys. The boron-bearing brazing alloys available are essentially nickel-chromium alloys with various percentages of silicon and boron added. Nicrobraz (AMS-4775) was used throughout this study to represent the boron-bearing type of brazing alloy. Alloy, G.E. 81, was used throughout to represent the boron-free type of brazing alloy and contains only silicon so that the liquidus temperature of the nickel-chromium mixture was lowered. It should be noted that Nicrobraz also has a higher carbon content than G.E. 81, and some of the effects described herein may result from this difference. Compositions of both brazing alloys are given on table I.

Nickel-chromium-type brazing alloys possess good oxidation resistance up to 1600° F and retain adequate joint shear strengths up to a test

temperature of 1200° F. A shear strength of 30,000 pounds per square inch at 1200° F for S-590 alloy specimens brazed with Nicrobraz is reported in reference 1. The Nicrobrazing in reference 1 was done at a temperature of 2150° F for 30 minutes in dry hydrogen.

Base Metals

The following base metals were used in this investigation: A-286 (AMS-5525), Inconel X (AMS-5542), N-155 (AMS-5532b), and L-605 (AMS-5537).

The compositions of these base metals are given in table I.

One of the first questions asked by designers is whether or not base-metal damage varies with the type of base metal. Since this was believed quite likely, four heat-resistant alloys were selected for investigation. All four base metals chosen for this program are used frequently in high-temperature sheet-stock application.

Two of the base metals selected, N-155 (AMS-5532b) and L-605 (AMS-5537), can be brazed without difficulty in either a dry-hydrogen atmosphere or vacuum.

Materials that can be age hardened such as A-286 (AMS-5525) and Inconel X (AMS-5542), have received considerable attention lately for use in air-cooled turbine designs. Unfortunately, the alloys containing aluminum and titanium are difficult to braze. Both the dry-hydrogen atmosphere at a dewpoint of -60° to 80° F and a vacuum with a pressure of 1 to 4 microns of Mercury were inadequate to braze these alloys. The oxides formed on the surface during the brazing cycle prevent flow and wetting by the brazing alloy.

The stability of the undesirable oxides on the base-metal surfaces at the brazing atmosphere conditions and temperature is the deciding factor in the wetting of the base metal by the brazing alloy. Chromium oxide, for example, may be stable and actually form at a -80° F dewpoint in a hydrogen atmosphere at 1000° F. However, as the temperature rises the equilibrium changes, and the oxides are reduced before the brazing temperature is reached. The reduction temperature for chromium oxide is lowered if the partial pressure of the oxygen is reduced. But up to the time of this investigation, it was impracticable to lower the dewpoint (hydrogen brazing) or pressure (vacuum brazing) enough to reduce the oxides on aluminum- and titanium-bearing alloys. One dependable way to braze these base metals is to plate them with a metal whose oxide can be reduced at temperatures lower than the brazing temperature being used.

CS-1 back

Plating of Base Metals

Iron and nickel plate were found satisfactory in brazing base metals. Nickel plating was used throughout this study, because it was more readily available at commercial platers. The "electroless" type of nickel plate (ref. 2) as well as the electrolytic type were used in this evaluation. As pointed out in reference 2, electroless plate can be applied uniformly to complex as well as internal surfaces. The advantage of electroless plating intricate shapes and internal surfaces with a uniform thickness would be of considerable value. Preliminary tests in a vacuum showed that the electroless plate used in this investigation melted at approximately 1700° F. This temperature is well below the brazing temperature, but the plate still retained its protective value. Electrolytic nickel plate is essentially pure nickel (m.p., 2642° F), whereas electroless nickel contains up to 10 percent phosphorous. The percent of phosphorous varies with the plating conditions.

SPECIMENS

Shear Specimens

It is considered very important that if comparisons are made between different brazing conditions or different brazing alloys, that they are made from results obtained from the same kind of specimen.

Probably the most important single factor affecting the shear joint strength of a brazing alloy is the degree of joint coverage. The variables, brazing temperature, time at temperature, brazing alloy and base-metal compositions, and atmospheres used in this investigation can all affect the degree of joint coverage. The shear specimen used (figs. 1 and 2) was designed with a relatively large shear area so that the effect of poor joint coverage would be increased. The specimen was so designed that the tensile yield strength of any base metal would not be exceeded during testing by an expected maximum shear joint strength of 40,000 pounds per square inch at 1200° F.

Joint clearance and the amount of brazing alloy present affect joint coverage as well as the actual joint shear strength (ref. 3). Machining tolerances were specified to hold joint clearances between 0.0015 and 0.0025 inch. Clearances were altered on specimens to be plated to ensure the final desired clearances. Samples to be tested were brazed using different amounts of brazing alloy powder placed in the bore of the specimen. A 0.40-gram sample of brazing alloy powder was used on the shear specimens although it provided a slight excess. With the brazing alloy so placed within the specimen, it was possible to heat the specimen to the brazing temperature ahead of the brazing alloy. To heat the specimen ahead of the brazing alloy is considered better than the brazing alloy temperature-

exceeding the specimen temperature during heating. Heating the specimen to the brazing temperature first, will minimize the time the base metal must be exposed to molten braze alloy directly under the applied braze. Whenever feasible, the brazing alloy should be applied in an area of low stress and allowed to flow to areas of high stress.

To measure the shear strength, all excess braze and fillets were removed. The removal of excess braze and fillets from the specimen used in this program involved simple boring and necking machining operations (see fig. 1).

5038

Tensile Specimens

The sheet-metal specimen shown in figure 3 was used to evaluate the effect of brazing on base-metal strength and ductility. The brazing alloy powder could not be applied dry to sheet-metal specimens. Therefore, a heavy slurry of braze powder and acryloid (thinned with acetone) was applied to one side of the specimen. When dry, the braze was trimmed in order to leave a layer 0.015 inch thick and 1/4 inch wide across the center of the 1-inch test section. Three specimens of each base alloy with no brazing alloy and three of each base alloy with each brazing alloy were prepared.

Furnaces

Vacuum furnace. - The furnace used for all the vacuum brazing reported in this investigation is shown in figure 4. The vacuum furnace employs a 100-kilowatt motor-generator induction heater to heat a 9-inch diameter graphite crucible (susceptor), which, in turn, heats the work load within it by radiation.

The heating coil assembly of the furnace was designed so that radiation losses would be high, assuring a rapid drop in temperature at the end of the heating cycle.

A 500-liter-per-second oil diffusion pump and a 100 cubic feet per minute mechanical pump maintains a pressure of 1 to 4 microns of mercury throughout the brazing cycles. A Pirani-type gage is used to measure vacuum.

Hydrogen furnaces. - The hydrogen brazing was done commercially with a batch-type furnace and a continuous hump-type furnace. Atmospheres reported for all cycles had a dewpoint of -70° to -80° F.

PROCEDURE

Brazing

In this study the effect of various times at brazing temperatures of 2100° and 2150° F on the shear strengths of brazed joints and on the degree of base-metal damage was investigated. The selection of these two temperatures (2100° and 2150° F) was based on past experiment at the Lewis laboratory with the two brazing alloys investigated (Nicrobraz and G.E. 81). It was found that incomplete joint coverage for large joint areas was likely to occur if brazing was done below 2100° F and that excessive parent-metal damage in thin sections could be expected above 2150° F. Two brazing atmospheres were investigated, vacuum and hydrogen atmosphere, the details of which will be covered in subsequent sections. A summary of all the brazing variables investigated is shown in table II.

5038

Vacuum brazing. - A typical brazing cycle consisted of (1) evacuation of the furnace by the vacuum pumps described earlier to a pressure of approximately 1 micron of mercury, (2) slow heating of the work load at a rate of approximately 50° F per minute to 1850° F, (3) holding at 1850° F for 10 minutes, (4) rapid heating (150° F/min) to the selected brazing temperature, (5) holding the brazing temperature for the selected time, (6) cutting of the electric power, which results in a very rapid cooling (300°/min) to 1800° F, and (7) a diminishing rate of cooling to room temperature.

To ensure uniform temperatures, the shear specimens were placed in a single concentric circle within the furnace susceptor (fig. 5). The thermocouple was placed within one of the specimens as close as possible to the brazing alloy. All brazing temperatures were controlled to ±5° F. At the brazing temperature, the measured pressure ranged from 3 to 4 microns of mercury. A pressure of 3 to 4 microns of mercury was found in preliminary tests to be adequate for brazing N-155 and L-605 alloys. Also, it was found that wetting of joints and flow into joints were possible for unplated Inconel X but not for unplated A-286. These same tests in a -80° F dewpoint hydrogen atmosphere revealed very poor wetting on both Inconel X and A-286. On the basis of these tests, it was decided to evaluate both plated and unplated Inconel X specimens for vacuum brazing and only plated specimens for hydrogen brazing. The electroless type of plate was chosen for Inconel X, whereas A-286 specimens were evaluated with electroless as well as electrolytic nickel plate.

In order to ascertain accurately the effect of time at the brazing temperature used in the brazing cycle, it was considered very important to have sufficient electric power available to raise the temperature of the work load from 1850° F to the desired brazing temperature as rapidly as possible. Slow heating through the melting range of the brazing alloy means a longer exposure of the base metal to the molten braze and can be

expected to have more damaging effects on the base metal than rapid heating. Flow and joint coverage (ref. 4) were adversely affected by slow heating through the melting range of a given brazing alloy. Heating slowly to 1850° F, holding for 10 minutes, and then heating more rapidly to the brazing temperature proved satisfactory for sheet-metal assemblies in that no appreciable distortion was observed. This heating technique was used throughout this study.

5038

Hydrogen brazing. - As mentioned earlier, the hydrogen brazing was done commercially. A dewpoint ranging from -70° to -80° F was reported. A complete set of shear specimens and sheet-metal specimens was brazed at 2150° F, which was held for 5 minutes. Although a dewpoint of -70° to -80° F was reported, the specimens were badly oxidized. This oxidation prevented the brazing alloy from wetting and flowing into the joints. Because of the resulting poor braze, these shear specimens were not tested. A group of shear specimens brazed at 2100° F and held for 30 minutes in a batch-type furnace was classed as satisfactory by the commercial operator and was tested. The sheet-metal specimens brazed at 2100° F and held for 30 minutes were also oxidized and were not tested.

A separate group of A-286 and Inconel X shear specimens was also brazed in a dry-hydrogen atmosphere. A technique used in hydrogen brazing of adding a flux to the brazing powder was used in place of plating the specimens.

Heat Treatment of Specimens

Since uniformity of processing and testing must be emphasized in a correlative study such as this, a single heat treatment was used for all specimens. An aging treatment of 1325° F for 16 hours was used for all shear and sheet-metal specimens after brazing. This single aging treatment, following a brazing cycle, produced near maximum strength in all four of the base metals.

Testing and Evaluation

All specimens were tested at 1200° F; the temperature was measured by a thermocouple in contact with the specimen. The specimens were held at temperature for 10 minutes prior to testing. A test temperature of 1200° F was selected since a range of 1000° to 1300° F is of primary interest to designers of air-cooled turbine blades. The method of testing shear specimens is shown in figure 6, while that for testing tensile specimens in a specially designed holder is shown in figure 7. The ends of the tensile specimens were preformed, as shown in figure 3, to fit the testing grips.

In order to compute the area of the shear joint, the length of engagement (see fig. 1) was measured for each shear specimen with depth and caliper micrometers before testing. All shear strengths (table III) reported were based on the entire area of engagement and not just on the actual area wetted and brazed. All specimens were checked visually after testing. The area for the tensile specimens was based on individual measurements for each specimen made prior to the application of brazing alloy. For the plated specimens, the area included the plate thickness.

5038

RESULTS AND DISCUSSION

Vacuum Brazing

The results of testing over 350 specimens at 1200° F are presented in figure 8. The photomicrographs of figure 8 were made from sections of the fractured tensile sheet-metal specimens tested at 1200° F. All the results shown on this figure are from vacuum-brazed specimens.

The top row of photomicrographs in figure 8 shows the effect of brazing temperature and time at temperature on the base-metal structure with no braze applied. The tensile strength and elongation (percent over reduced section) are given, and the second row of photomicrographs shows the effect on these properties when the boron-bearing braze was applied. In addition, the shear strength values obtained from the shear specimens for the same brazing alloy and brazing conditions are given. The bottom row of photos in figure 8 shows the results when the boron-free brazing alloy was used.

As described previously, the braze was applied in a band 1/4 inch wide across the center of the 1-inch test section. During the braze heating cycle, the brazing alloys tended to flow along this 1-inch test section. When the specimens were tested in tension, all those coated with the boron-bearing braze fractured in the area where the braze had been initially applied. Those coated with the boron-free braze failed predominantly outside of the area where the braze had been applied initially (but still within the gage section). These data illustrate a general difference between the two braze alloys in regard to base-metal damage. All photomicrographs were taken of areas directly under that where braze had been initially applied and where penetration might be greatest. Thus photomicrographs for the boron-bearing braze show the fracture, whereas those photos for the boron-free braze generally do not.

It should be noted that the percent elongation was calculated on the basis of the entire reduced section. These values therefore do not represent, in all cases, the elongation that can be expected from the heavily brazed area. The tensile strength, elongation, and joint-shear-strength values are averages for the three specimens tested at 1200° F.

The photomicrographs and data missing from figure 8 resulted from specimens lost during brazing. The low melting electroless nickel plate brazed several specimens to the brazing fixture and the specimens could not be removed for evaluation.

Electrolytically plated A-286. - The results obtained from A-286 alloy electrolytically plated with nickel prior to brazing are shown in figure 8(a). A plate thickness of 0.0005 to 0.0008 inch was used on both the shear and sheet-metal specimens.

The photographs and data of A-286 with no braze reveal only a moderate effect of brazing temperature and time at temperature on the tensile strength and elongation of A-286. The tensile strength for the specimen processed at 2100° F for 15 minutes was 115,100 pounds per square inch, whereas it was reduced to 102,000 pounds per square inch after being held for 15 minutes at 2150° F.

The effect on the ultimate grain size of increasing time at high temperatures is pronounced. It can be seen in the top row of figure 8(a) that the grains are considerably larger for the longer holding times at brazing temperatures.

The photographs and data of A-286 with boron-bearing braze (fig. 8(a)) reveal the damaging effects of the boron-bearing braze. Both increased time and increased temperature have affected the structure as well as reduced the tensile properties. The reduction in tensile strength ranged from 6000 to 28,000 pounds per square inch. The brazing alloy nearly penetrated or diffused through the entire 0.030 inch of base metal when held at 2150° F for 15 minutes.

The data of A-286 with boron-free braze reveal that there was no appreciable effect on either the base-metal structure or the tensile properties.

Incomplete joint coverage by the boron-free braze was found when the lower brazing temperature and shorter time were used. For all the brazing cycles investigated, the boron-bearing braze produced shear joint strengths at least 15 percent greater than those for the boron-free brazing alloy.

Electroless nickel plated A-286. - In figure 8(b) the A-286 alloy was plated with 0.0003-inch electroless nickel prior to brazing. By comparing the results shown in the top row of figure 8(b) with those of figure 8(a), it can be seen that this plate itself can have a damaging effect on the structure and strength of the base alloy. This effect is most apparent for the longer times at brazing temperature. When compared with the same cycle for pure nickel plate, the decrease in tensile strength was as much as 28,000 pounds per square inch.

The boron-bearing braze caused a complete alteration of the base-metal structure during all brazing cycles. Although this resulted in considerable reduction in base-metal strength, the joint shear strengths for the two brazing alloys were nearly equivalent. These shear strengths, however, were found to average approximately 9000 pounds per square inch less than those for the electrolytic plated specimens (fig. 8(a)).

The data of boron-free braze with A-286 (fig. 8(b)) reveal not only that there is a less damaging effect than with the boron-bearing braze, but also that the boron-free braze prevents serious damage by the electroless nickel plate. Although it is not apparent from the photographs, the brazing alloy flowed over and wet the entire test section and prevented in some way the diffusion of the plate constituents.

5038

Unplated Inconel X. - The results obtained from the unplated Inconel X specimens are shown in figure 8(c). Unplated Inconel X was included in this study because of the satisfactory flow and joint coverage found during preliminary tests. The preliminary tests were run in a 4-inch-diameter tube furnace prior to the completion of the induction furnace used in this program. None of the heating cycles used produced the complete joint coverage attained in the tube furnace. Although the pressures maintained in these furnaces are the same, the heating cycles are considerably different. Because of limited power available in the tube furnace, the heating through the melting range of the brazing alloy was very slow. The brazing alloy was estimated to be either partially or completely melted for at least 90 minutes. It appears that slow heating near the melting range aids the flow of the brazing alloy on Inconel X. It is possible that the increased time at high temperature aids the dissociation of the oxides on Inconel X.

Although both brazing alloys reduced the tensile strength somewhat, the boron-bearing braze has a greater detrimental effect on the elongation than the boron-free braze.

Electroless nickel-plated Inconel X. - In figure 8(d), the Inconel X was plated with 0.0003-inch electroless nickel prior to brazing. This phosporous-bearing nickel plate, which melted at about 1700° F, affected the structure to varying depths for the brazing cycles used. In comparing the tensile strength of unplated and plated Inconel X, the top row in figures 8(c) and 8(d), respectively, a decrease of between 10 and 20 percent in tensile strength is attributable to the plating. As was the case with an A-286 alloy (fig. 8(b)), the specimens with the boron-bearing braze contained a seriously damaged area. Again, the boron-free braze resulted in negligible damage as compared with braze-free plated sheet, but produced shear joints much weaker than the boron-bearing braze.

Inconel X can also be plated by electrodeposition, which offers a more reliable method for vacuum brazing of this alloy. At the Lewis laboratory

at the present time unplated Inconel X is being vacuum brazed when small joints are involved, and electrolytically plated Inconel X vacuum brazed when large joints must be covered.

N-155. - The N-155 alloy (Multimet)(fig. 8(e)) requires no plating for either dry-hydrogen or vacuum brazing. No significant differences are apparent in the photographs and data of braze-free N-155.

The second row of figure 8(e) reveals a decrease of tensile strength from 78,000 to 60,000 pounds per square inch as time and temperature are increased. This decrease depicts the importance of close control of brazing temperature and time at brazing temperature when the boron-bearing braze is used.

As seen in the bottom row of figure 8(e), neither time nor temperature affect the strength of the sheet brazed with the boron-free braze. The boron-free braze affords a greater freedom of both temperature and time for the ranges investigated than the boron-bearing braze. The boron-bearing braze produced shear joints approximately 17 percent stronger than the boron-free braze.

L-605. - Considerable differences in strength and ductility were found with L-605 (AMS-5537) after the various brazing cycles (fig. 8(f)). The 2150° F brazing cycles caused more solutioning in L-605 than the 2100° F cycles. This difference is apparent in the top row of figure 8(f). All specimens were polished and etched in one mount. Although this technique may not have given an optimum etch for any one specimen, it revealed differences in metal structure effectively.

The boron-bearing braze decreased the base-metal strength and ductility; while the boron-free braze did not. Very close control of both temperature and time at temperature are necessary to minimize damage to base-metal structure and properties when thin sections are being brazed with the boron-bearing braze.

The shear joints on all the L-605 specimens were completely covered for both types of braze. The shear strengths for the boron-free braze were between 4 and 20 percent weaker than for the boron-bearing braze.

Hydrogen Brazing

The results of all the tested shear specimens brazed in dry-hydrogen for this study are shown in table III. All these specimens were brazed at the same holding time of 30 minutes at 2100° F in an atmosphere reported by the commercial operator to have a dewpoint of -70° to -80° F. A wide variation in joint coverage was found for the different specimens.

The results of all the tested shear specimens brazed in vacuum at 2100° F and held for 30 minutes were added to table III for convenient comparison. Whenever complete joint coverage was obtained, the shear strengths of the hydrogen processed specimens compared with completely covered joints produced during the same vacuum brazing cycle. The shear strengths of the L-605 specimens with both brazing alloys were almost identical to those brazed in vacuum. Again as was found in vacuum brazing, the boron-bearing braze was approximately 15 percent stronger than the boron-free braze.

Although every one of the unplated Inconel X and A-286 specimens that were brazed with flux contained visible flux inclusions, they were essentially as strong in joint shear strength as the best specimens produced in vacuum. In fact, this technique of brazing Inconel X was far superior to unplated or electroless nickel plate techniques evaluated in a vacuum. These same fluxes (calcium fluoride or sodium difluoride) volatilized in a vacuum atmosphere and were completely ineffective.

SUMMARY OF RESULTS

Vacuum and hydrogen brazing of four heat-resistant alloys with two types of high-temperature brazing alloy were investigated. Although it was thought that the primary difference between the brazing alloys was boron content, the boron-bearing alloy also contained a relatively high amount of carbon and some of the effects may be associated with this difference. The effect of time at two brazing temperatures (2100° and 2150° F) on the 1200° F shear strength of joints and on the base-metal tensile strength and elongation of four sheet materials (A-286, L-605, N-155, and Inconel X) was investigated.

The following results were obtained:

1. When boron-bearing braze was applied to the central area of the gage section of sheet tensile specimens, and the specimens were pulled in tension at 1200° F, as a result of braze penetration during the brazing cycles investigated, the tensile strength and ductility of the sheet were decreased appreciably. This base-metal damage became greater with increasing temperature and time of the brazing heating cycle. The amount of damage varied with the four base alloys.

2. When the boron-free braze was applied, the measured tensile strengths and ductilities of three base metals were generally the same as the specimens without braze but given the same respective braze heating cycle. In the case of Inconel X, some reduction in tensile properties was noted, but the reduction was less than for the boron-bearing braze.

3. Testing of shear joints at 1200° F of specimens brazed in vacuum and hydrogen revealed that joints brazed with the boron-bearing braze were somewhat stronger than joints brazed with boron-free braze. The difference varied for the four base metals brazed.

4. Shear specimens brazed in hydrogen with both types of brazing alloy exhibited more erratic joint coverage by the brazing alloy than those brazed in vacuum. The data indicated, however, if joint coverage was complete, that vacuum and hydrogen brazed shear specimens were equivalent in strength.

5038

5. Alloys that can be age hardened and contain titanium and aluminum could be successfully brazed in vacuum by first electroplating with nickel. The results indicated that the addition of flux to the brazing alloy was more reliable for hydrogen brazing than was the plating. Flux additions were found to be ineffective during vacuum brazing.

6. The electroless type of nickel plate enhanced flow and joint coverage on alloys that could be age hardened and contained titanium and aluminum, but was found to have an adverse effect on base-metal strength and ductility as well as on joint shear strength.

Lewis Flight Propulsion Laboratory
National Advisory Committee for Aeronautics
Cleveland, Ohio, December 17, 1956

REFERENCES

1. Peaslee, Robert L., and Boam, Willard M.: Design Properties of Brazed Joints for High-Temperature Applications. Welding Jour., vol. 31, no. 8, Aug. 1952, pp. 651-662.

2. Gutzeit, Gregoire: Kanigen Nickel Plating. Metal Prog., vol. 66, no. 1, July 1, 1954, pp. 113-120.

3. Anon.: Brazing Manual. American Welding Soc., Reinhold Pub. Corp., 1955.

4. Rose, Arnold S., and Lewis, William N.: High-Temperature Alloy Brazing of Thin Materials for Jet Engines. Welding Jour., vol. 34, no. 1, Jan. 1955, pp. 30-39.

TABLE I. - CHEMICAL COMPOSITIONS OF BASE METALS AND BRAZING ALLOYS

	C	Mn	Si	Cr	Ni	Co	Mo	W	Cb	B	N_2	Fe	Ti	Al	Cu	S	P	V
Brazing alloy																		
Boron-bearing braze	0.65		4.5	15	Balance					3.75		4.00						
Boron-free braze	0.14		10	19.5	Balance							1						
Base alloy																		
A-286 (AMS-5525)	0.08	1.5	0.7	14.5	25.5		1.2					Balance	2	0.3		0.03	0.04	0.3
Inconel X (AMS-5542)	0.08	0.7	0.5	14.5	70							7	2.5	0.7	0.2	0.01		
N-155 (AMS-5532b)	0.15	1	0.5	20	20	20	3.25	2.5	1		0.15	Balance						
I-605 (Haynes no. 25) (AMS-5537)	0.12	1.5	1	20	10	51		15				3						

TABLE II. - BRAZING VARIABLES INVESTIGATED

[Test temperature, 1200° F]

Brazing alloy	Boron-bearing braze												Boron-free braze											
Plating alloy	Electroless nickel				Electrolytic nickel				No plate				Electroless nickel				Electrolytic nickel				No plate			
Brazing temp., °F	2100		2150		2100		2150		2100		2150		2100		2150		2100		2150		2100		2150	
Time at brazing temperature, min	15	30	5	15	15	30	5	15	15	30	5	15	15	30	5	15	15	30	5	15	15	30	5	15
Shear specimens[a]:																								
In vacuum:																								
A-286	x	x	x	x	x	x	x	x					x	x	x	x	x	x	x	x				
Inconel X	x	x	x	x					x	x	x	x	x	x	x	x					x	x	x	x
N-155									x	x	x	x									x	x	x	x
L-605									x	x	x	x									x	x	x	x
In hydrogen:																								
A-286		x				x								x				x						
Inconel X		x												x								x		
N-155										x												x		
L-605										x												x		
A-286 flux added										x												x		
Inconel X flux added										x												x		
Tensile specimens in vacuum[b]:																								
A-286	x	x	x	x	x	x	x	x					x	x	x	x	x	x	x	x				
Inconel X	x	x	x	x					x	x	x	x	x	x	x	x					x	x	x	x
N-155									x	x	x	x									x	x	x	x
L-605									x	x	x	x									x	x	x	x

[a]Three shear specimens processed for each condition.

[b]Six tensile specimens processed for each condition, three with brazing alloy, three with no braze.

5038

TABLE III. - COMPARISON OF 1200° F SHEAR JOINT STRENGTHS OF HYDROGEN- AND VACUUM-BRAZED SPECIMENS

[Brazed at 2100° F for 30 min.]

Alloy	Surface preparation	Shear strength, psi			
		Hydrogen		Vacuum	
		Boron-bearing braze	Boron-free braze	Boron-bearing braze	Boron-free braze
A-286	Electroless nickel plate	30,600 32,300 31,300	[a]15,300 [a]10,500 [a]20,100	31,600 31,900 32,000	33,600 32,600 32,900
A-286	Electrolytic nickel plate	[a]29,200 [a]26,700 [a]32,500	[a]25,300 [a]18,500 [a]20,200	38,900 39,400 38,700	34,200 33,600 34,200
A-286	Flux[b] added (unplated)	38,600 37,500 40,200	32,200 31,000 30,500	None	None
Inconel X	Electroless nickel plate	[a]18,500 [a]21,300 [a]16,500	[a]12,500 [a]10,000 [a]13,800	24,900 23,100 23,400	18,300 18,500 17,800
Inconel X	Flux[b] added (unplated)	35,800 36,500 35,200	29,300 30,500 31,500	[a]26,100 [a]25,700 [a]26,300 No flux	[a]27,700 [a]27,300 [a]28,100 No flux
N-155	Unplated	[a]22,200 [a]28,000 [a]15,500	24,800 25,600 24,200	33,800 31,600 32,600	24,300 26,600 24,800
L-605	Unplated	38,600 37,700 35,600	30,200 28,000 31,800	38,800 38,400 38,100	32,900 29,300 31,300

[a]Incomplete joint coverage; stress based on entire area of engagement.

[b]All flux treated specimens contained visible flux inclusions in the tested joints.

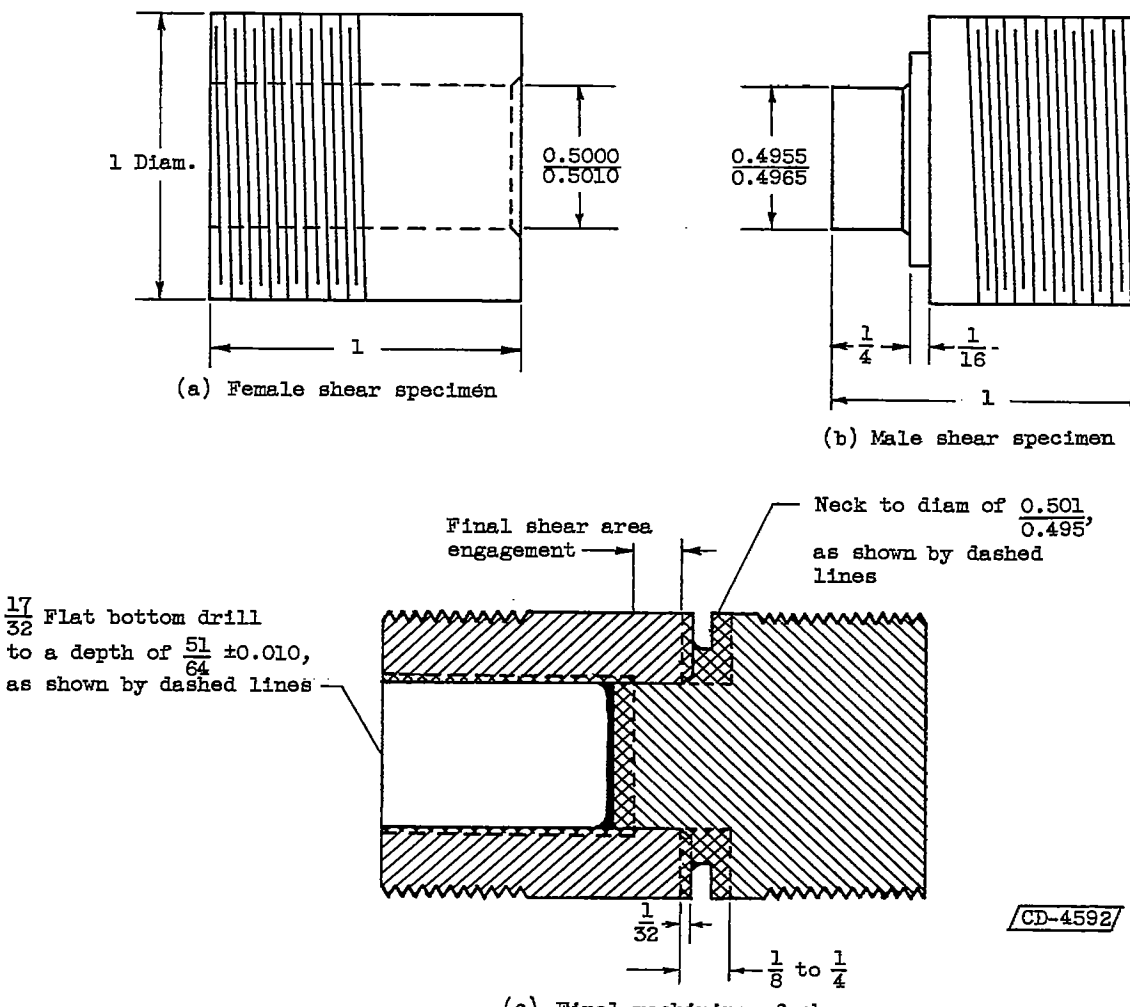

Figure 1. - Shear specimen. (All dimensions in inches.)

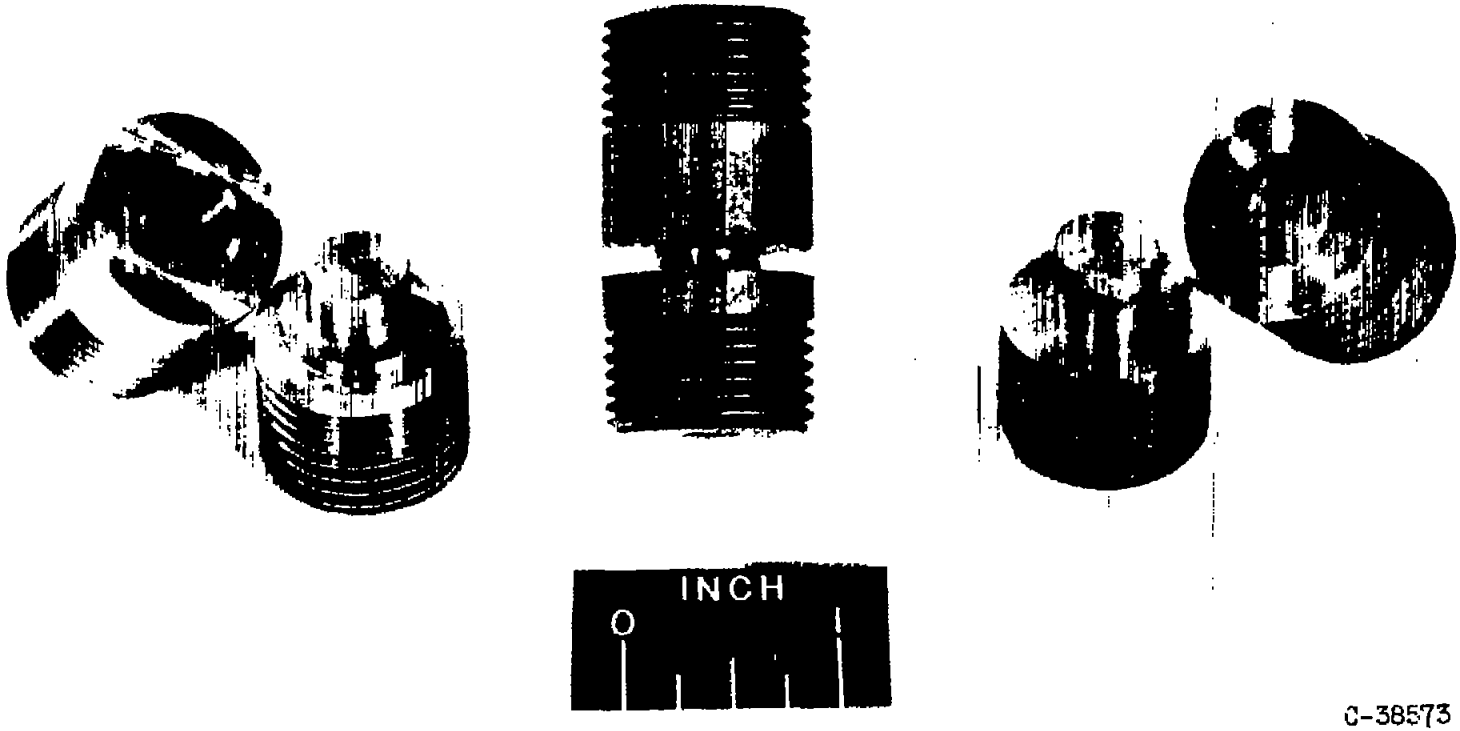

C-38573

(a) Machined. (b) Brazed and machined. (c) Tested

Figure 2. - Shear specimens.

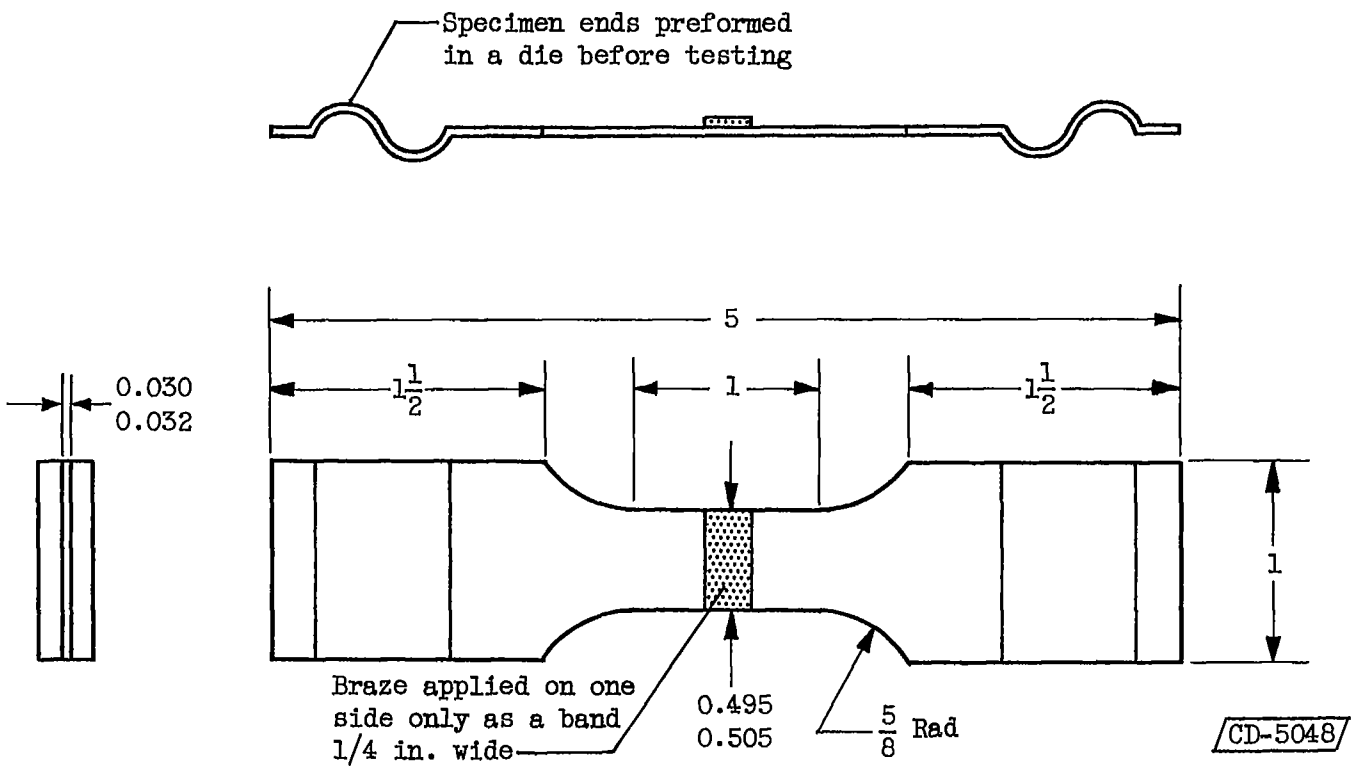

Figure 3. - Sheet-metal specimen. (All dimensions in inches.)

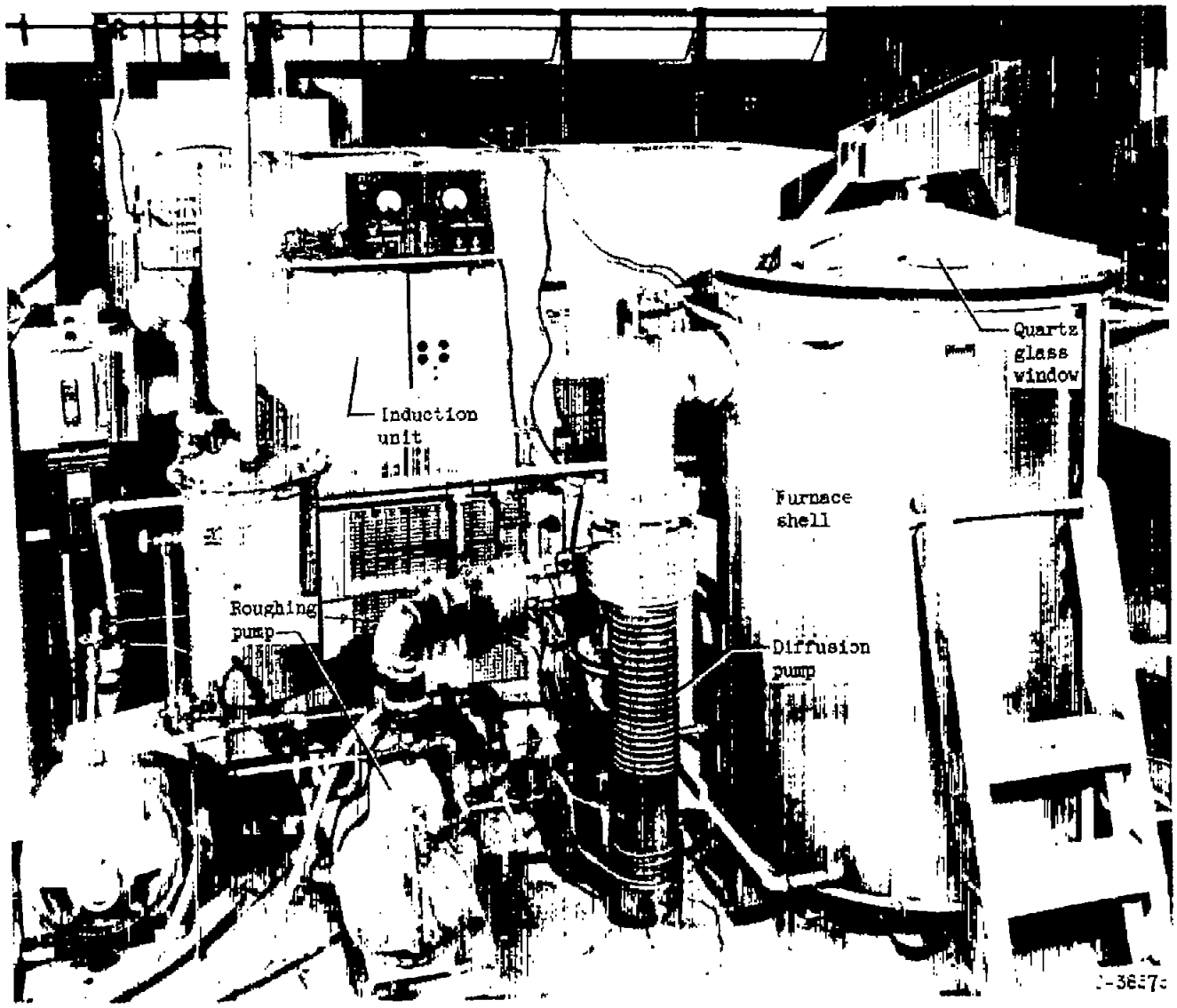

Figure 4. - Induction vacuum brazing furnace and equipment.

5038

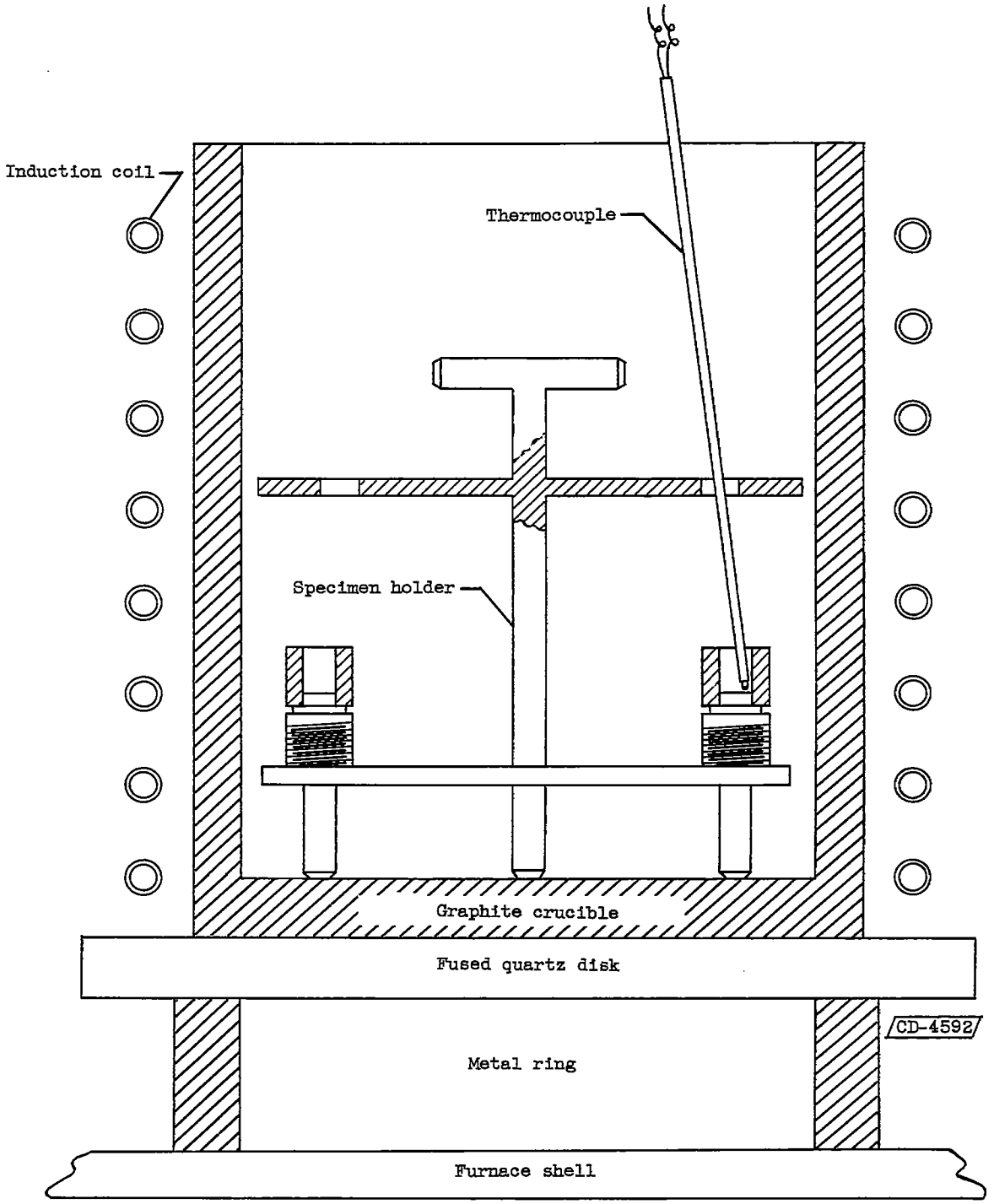

Figure 5. - Shear specimen placement within furnace crucible.

5038

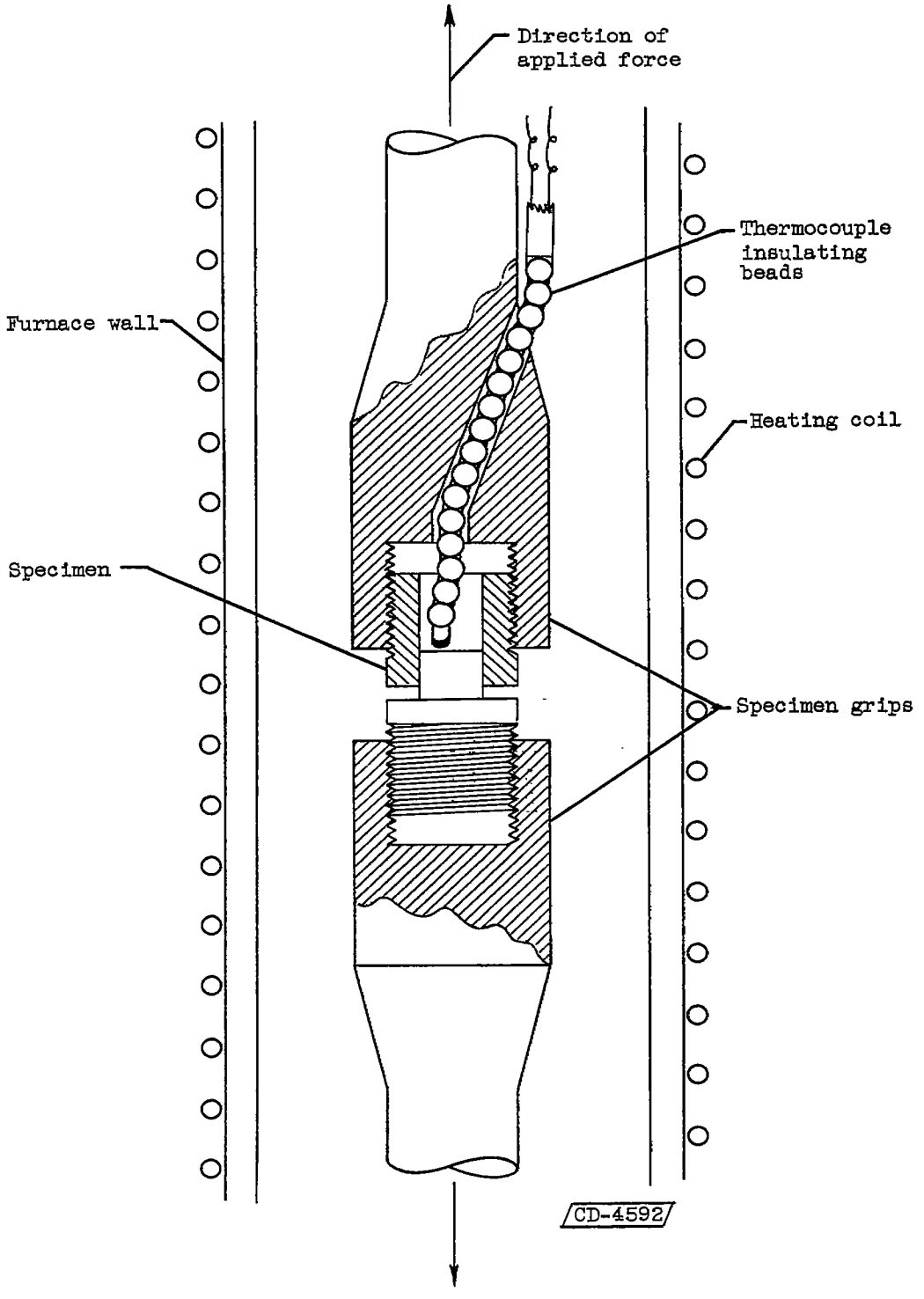

Figure 6. - Shear specimen setup for elevated-temperature testing.

5038

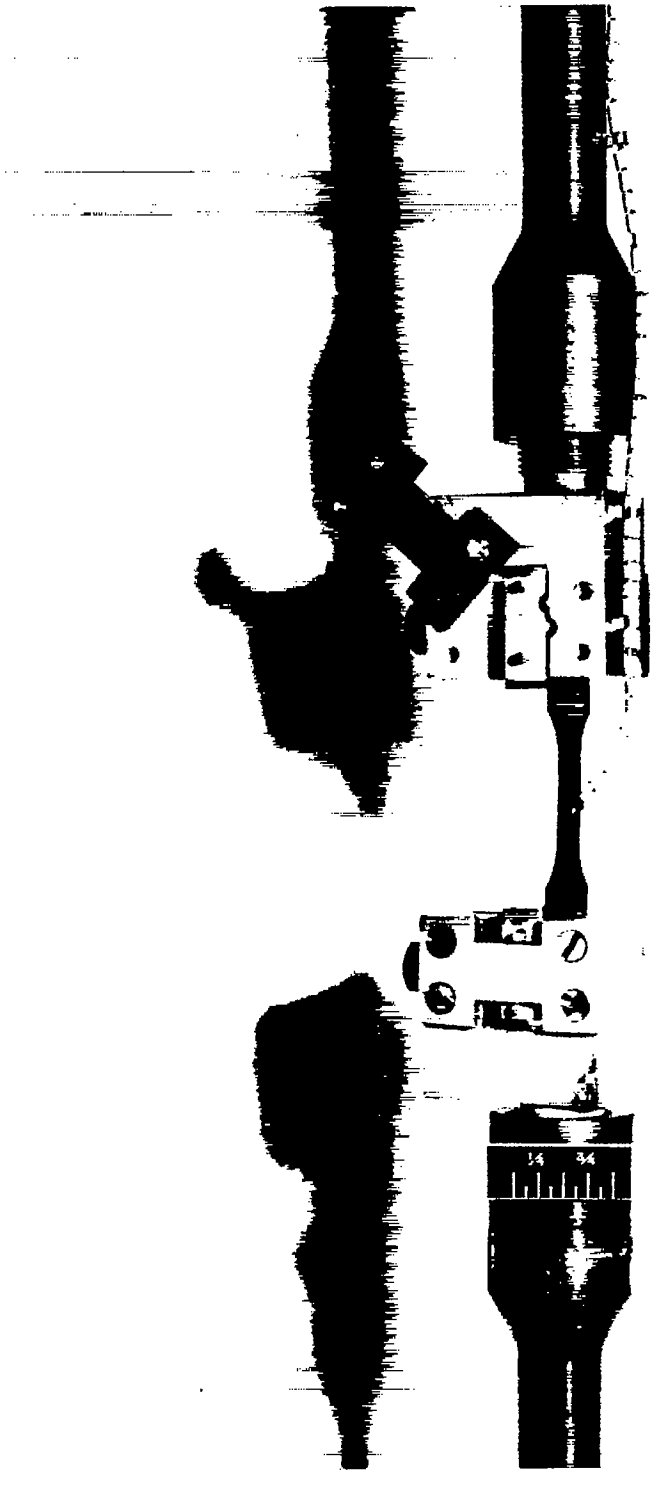

C-39369

Figure 7. - Gripping method of sheet-metal specimen in elevated-temperature testing setup.

5038

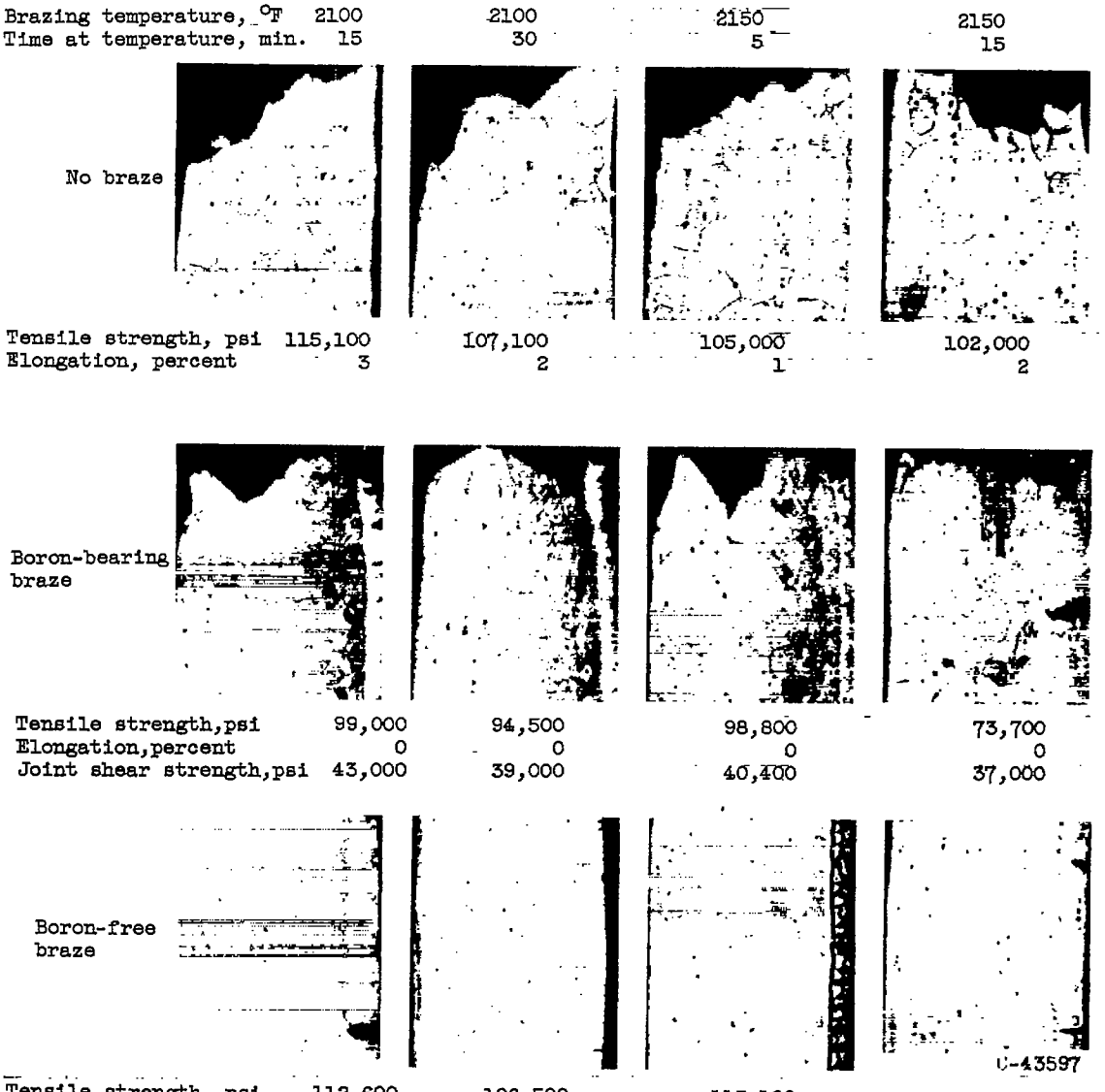

(a) Base metal, A-286 (AMS-5735); electrolytic nickel plate; etchant, electrolytic chromic acid plus Kallings reagent.

Figure 8. - Effect of brazing temperature and time at temperature on base-metal structure, tensile strength, elongation, and joint shear strength at test temperature of 1200° F. Full specimen thickness of 1/32 inch represented by photograph width; X100. [a]Incomplete joint coverage.

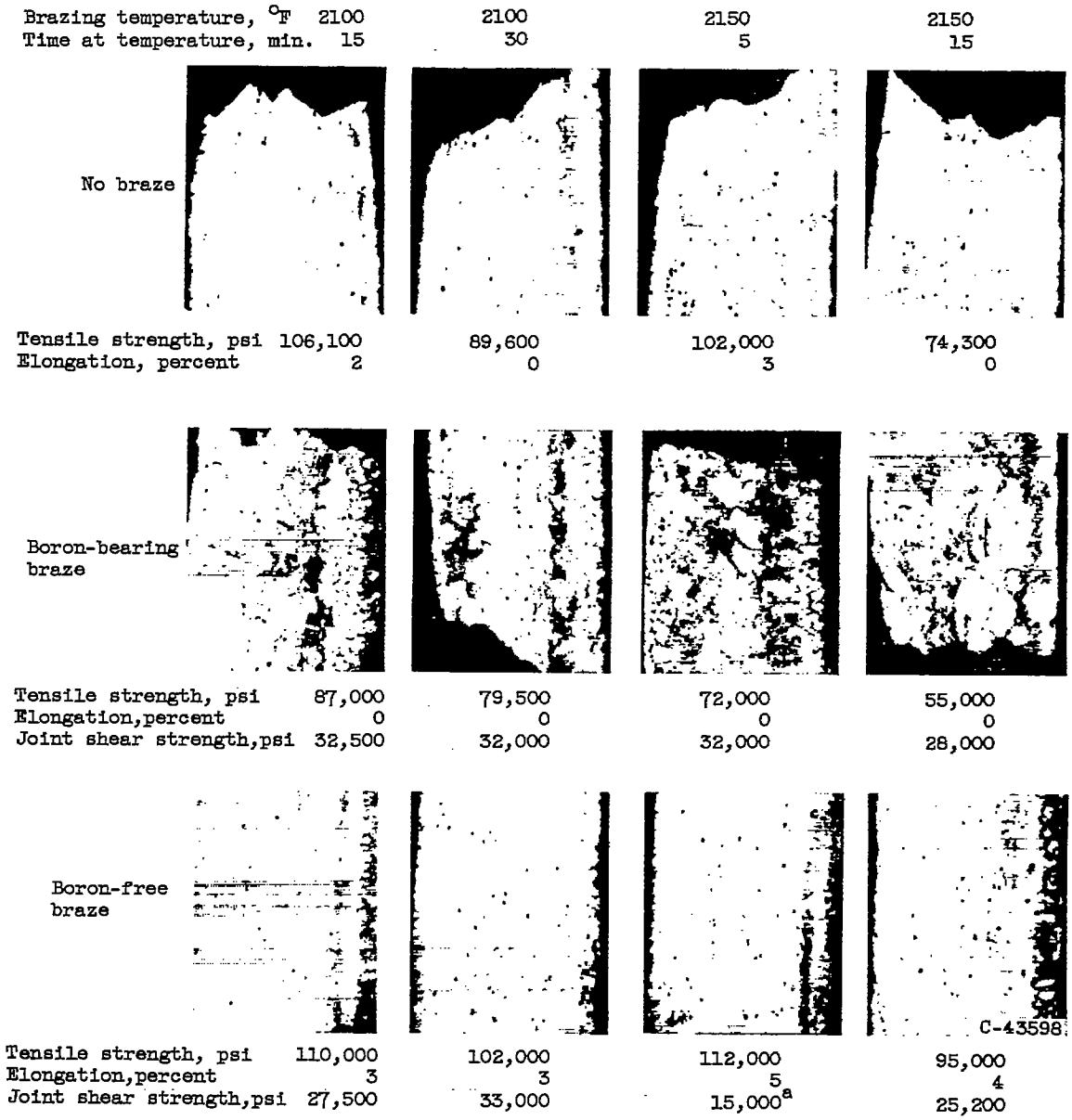

(b) Base metal, A-286(AMS-5735); electroless nickel plate; etchant, electrolytic chromic acid plus Kallings reagent.

Figure 8. - Continued. Effect of brazing temperature and time at temperature on base-metal structure, tensile strength, elongation, and joint shear strength at test temperature of 1200° F. Full specimen thickness of 1/32 inch represented by photograph width; X100. [a]Incomplete joint coverage.

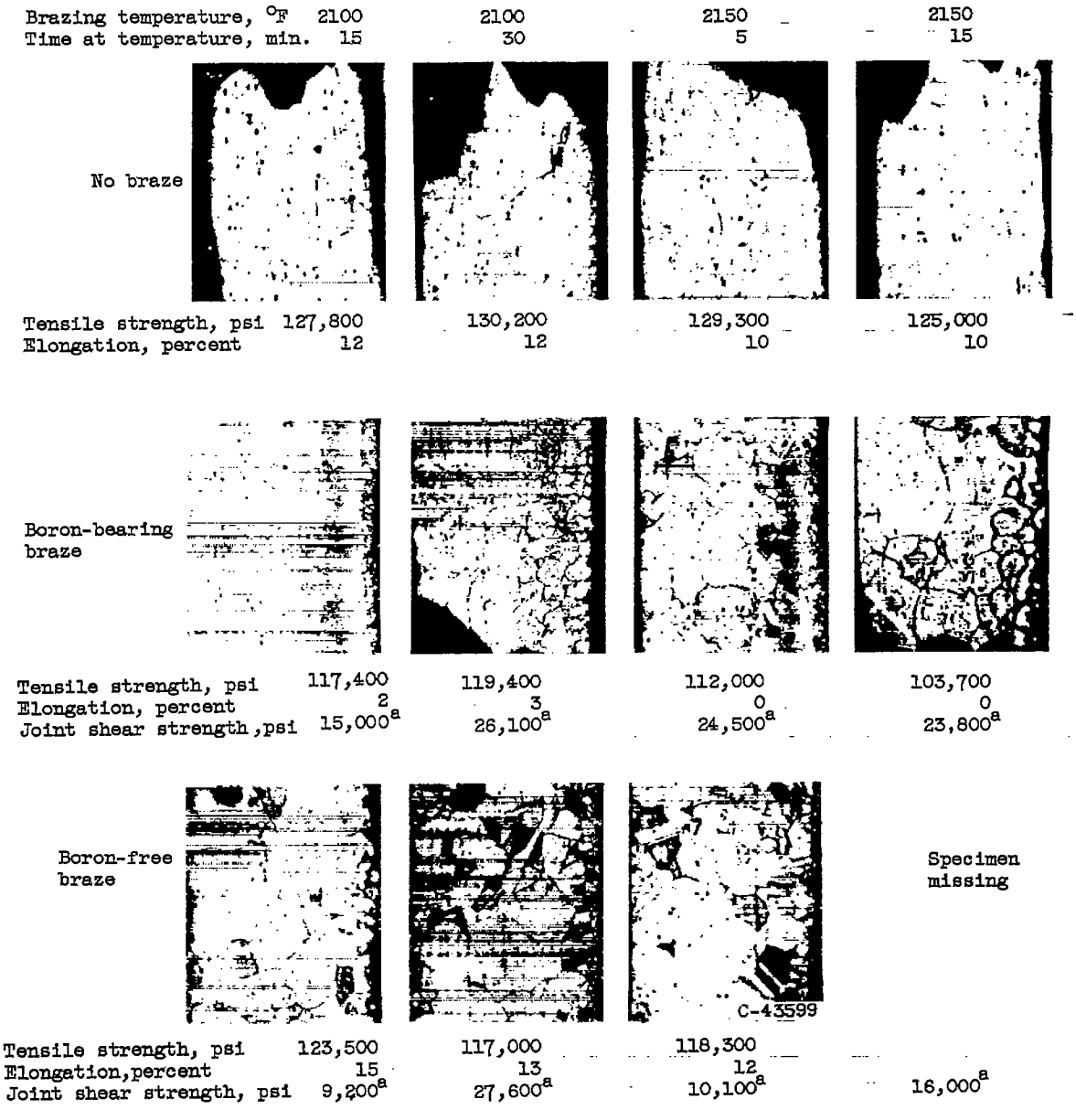

(c) Base metal, Inconel X (AMS-5542A); no plating; etchant, electrolytic chromic acid plus Kallings reagent.

Figure 8. - Continued. Effect of brazing temperature and time at temperature on base-metal structure, tensile strength, elongation, and joint shear strength at test temperature of 1200° F. Full specimen thickness of 1/32 inch represented by photograph width; X100. [a]Incomplete joint coverage.

Brazing temperature °F	2100	2100	2150	2150
Time at temperature, min.	15	30	5	15

No braze

Tensile strength, psi	115,100	107,200	115,600	99,800
Elongation, percent	10	10	11	10

Boron-bearing braze

Specimen missing

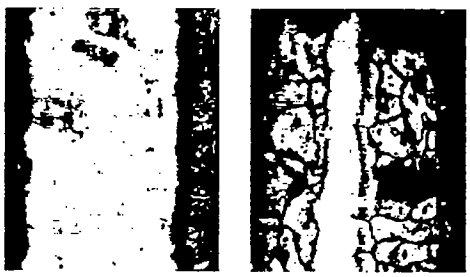

Tensile strength, psi	99,300		96,000	78,500
Elongation, percent	0		0	0
Joint shear strength, psi	22,000	23,500	27,000	22,000

Boron-free braze

Tensile strength, psi	111,000	108,000	110,900	105,600
Elongation, percent	10	10	11	7
Joint shear strength, psi	17,000	18,200	18,000	19,500

(d) Base metal, Inconel X (AMS-5543A); electroless nickel plate; etchant, electrolytic chromic acid plus Kallings reagent.

Figure 8. - Continued. Effect of brazing temperature and time at temperature on base-metal structure, tensile strength, elongation, and joint shear strength at test temperature of 1200° F. Full specimen thickness of 1/32 inch represented by photograph width; X100.

Brazing temperature, °F	2100	2100	2150	2150
Time at temperature, min.	15	30	5	15

No braze

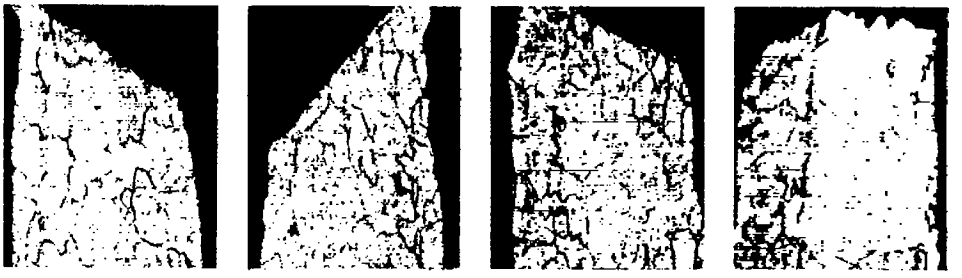

Tensile strength, psi	79,400	80,000	81,900	78,100
Elongation, percent	32	23	30	30

Boron-bearing braze

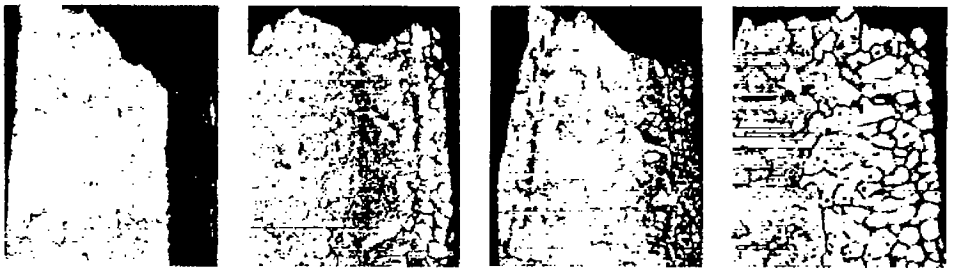

Tensile strength, psi	78,000	72,000	69,000	60,000
Elongation, percent	20	12	12	10
Joint shear strength, psi	33,000	32,500	32,000	32,000

Boron-free braze

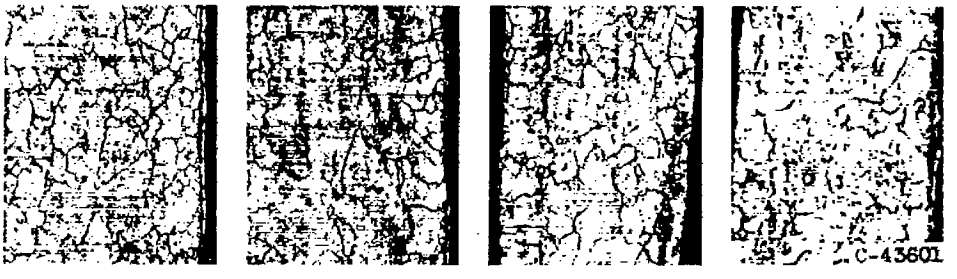

Tensile strength, psi	80,000	81,500	81,000	82,000
Elongation, percent	30	25	30	30
Joint shear strength, psi	30,000	25,500	27,000	28,500

(e) Base metal, N-155 (AMS-5532b); no plating; etchant, Kallings reagent.

Figure 8. - Continued. Effect of brazing temperature and time at temperature on base-metal structure, tensile strength, elongation, and joint shear strength at test temperature of 1200° F. Full specimen thickness of 1/32 inch represented by photograph width; X100.

Brazing temperature, °F	2100	2100	2150	2150
Time at temperature, min	15	30	5	15

No braze

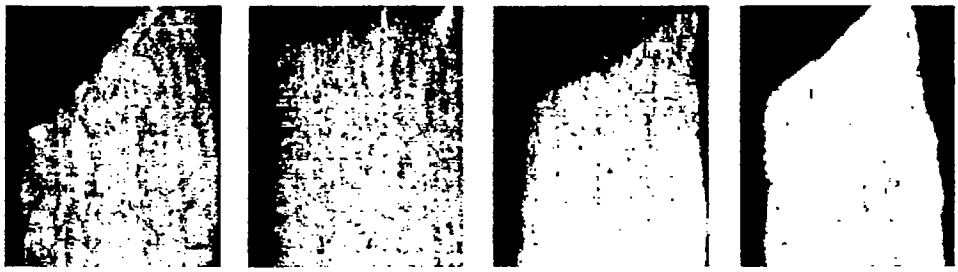

Tensile strength, psi	110,200	113,300	97,900	88,300
Elongation, percent	26	25	38	48

Boron-bearing braze

Tensile strength, psi	80,000	94,000	79,000	64,000
Elongation, percent	19	19	17	10
Joint shear strength, psi	33,200	38,400	31,000	34,000

Boron-free braze

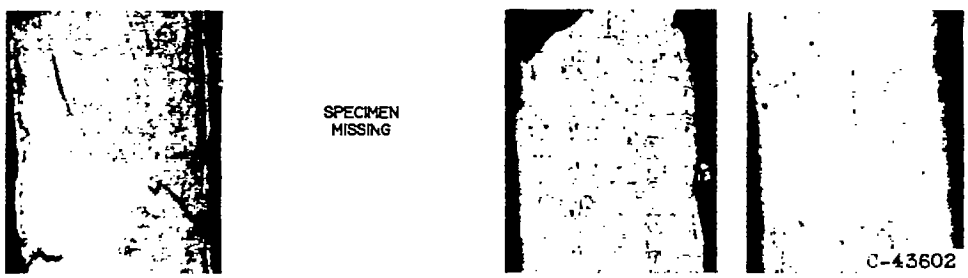

Tensile strength, psi	104,800		96,000	87,000
Elongation, percent	25		38	38
Joint shear strength, psi	32,500	31,200	29,500	27,300

(f) Base metal, L-605 (Haynes 25); no plating; etchant, Kallings reagent.

Figure 8. - Concluded. Effect of brazing temperature and time at temperature on base-metal structure, tensile strength, elongation, and joint shear strength at test temperature of 1200° F. Full specimen thickness of 1/32 inch represented by photograph width ; X100.