10279

NACA TN 3935

TECH LIBRARY KAFB, NM
0067135

NATIONAL ADVISORY COMMITTEE FOR AERONAUTICS

TECHNICAL NOTE 3935

HYDROGEN-OXYGEN EXPLOSIONS IN EXHAUST DUCTING

By Paul M. Ordin

Lewis Flight Propulsion Laboratory
Cleveland, Ohio

Washington
April 1957

AFMDC
TECHNICAL LIBRARY
AFL 2811

TECH LIBRARY KAFB, NM

0067135

NATIONAL ADVISORY COMMITTEE FOR AERONAUTICS

TECHNICAL NOTE 3935

HYDROGEN-OXYGEN EXPLOSIONS IN EXHAUST DUCTING

By Paul M. Ordin

4020

CP-1

SUMMARY

The ignition of hydrogen-oxygen gas mixtures at a pressure of 1 atmosphere in a 2-foot-diameter duct resulted in detonation combustion. The detonation static pressure at an oxidant-fuel mole ratio of 0.82 was about 315 lb/sq in. abs (pressure-rise ratio of 21). The use of water curtain sprays distributed through a substantial section of the duct did not prevent a detonation but did reduce the peak pressure to 200 lb/sq in. abs. The detonation could be prevented by adding sufficient carbon dioxide to place the gas mixture out of the flammable range. The use of smaller quantities of carbon dioxide resulted in a reduction in the peak detonation pressures. The total pressures exerted on various designs of 90° steel elbows by the detonation were about 900 lb/sq in. abs (pressure-rise ratio of 60). A design stress of 38,400 psi and suitable supporting members for the exhaust duct elbow contained the detonation without any damage to the structure.

INTRODUCTION

The design considerations of a rocket facility may involve the firing of rocket engines into large ducts for several reasons. The use of a duct for the rocket exhaust may permit a reduction of the noise output and also allow for the cooling and chemical treatment of the exhaust gases.

Operation of rocket engines with various propellant combinations has produced hard starts and explosions. The nature of the chemical propellants and starting systems and the design of operating valves and related hardware and of injection systems all affect the tendency to promote explosions. If a rocket engine is either enclosed in or sealed to the exhaust duct, the duct will contain the products exhausting from the rocket engine, and somewhat the same conditions will exist in the duct as in the rocket chamber. This possibility may result in explosions in the exhaust duct.

Explosions involve two combustion processes dependent upon the conditions that exist in the container. The explosion may result in a flame

or combustion wave that travels at a few hundred feet per second or in a detonation wave that travels at many thousand feet per second. The pressures associated with a detonation wave are considerably higher than those obtained with normal combustion and could result in the failure of structures designed to withstand normal combustion pressures. It is therefore desirable to know the conditions under which a detonation may develop in a large duct and the characteristics of a detonation of rocket propellants. An effort was made to carry out the studies in a configuration simulating a rocket facility.

This report presents results of an investigation at the NACA Lewis laboratory to determine whether the ignition of a rocket propellant mixture at atmospheric pressure and in a large duct would give rise to explosions with velocities and pressures characteristic of a detonation. The hydrogen-oxygen propellant combination was selected because of its wide range of explosive mixtures and the possibility of its consideration as a useful rocket propellant. The experiments were carried out in a pipe 2 feet in diameter and approximately 30 feet long. The large length was used to ensure sufficient distance for the buildup of a detonation and the large diameter to reduce the wall effect. The velocity and pressure were measured to determine the nature of the explosion. Additional experiments were conducted to determine the end load pressures exerted on 2-foot-diameter elbows and the stresses developed in a thin-walled duct because of a detonation wave. Methods of preventing the formation of a detonation and of reducing the possible maximum pressures were investigated by the use of water and carbon dioxide introduced into the duct with the hydrogen and oxygen.

THEORETICAL PROPERTIES

The theoretical values of detonation pressures and velocities for the hydrogen-oxygen combination were obtained from reference 1 and are presented in figures 1 and 2. For an initial pressure of 1 atmosphere, a peak detonation pressure of 265 lb/sq in. abs is obtained at an oxidant fuel mole ratio of 0.5. The detonation velocity at this composition is 9200 feet per second. The detonation pressures of the stoichiometric hydrogen-oxygen mixture with various quantities of nitrogen were obtained from reference 1 and are presented in figure 3. The addition of nitrogen to the hydrogen-oxygen mixture decreases the peak detonation pressures. However, large quantities of nitrogen are required to produce a substantial decrease in the pressure. Approximately 60 percent by volume of nitrogen in the mixture will reduce the pressure from 265 to 196 lb/sq in. abs. The limits of inflammability of mixtures of hydrogen, air, and carbon dioxide or nitrogen were obtained from reference 2 and are presented in figure 4. The flammable range for hydrogen and air is between 4 and 72 percent hydrogen. For the hydrogen-oxygen mixture, the flammable range is 4.6 to 93.9 percent hydrogen, and the detonation limits vary from 15

to 90 percent hydrogen (ref. 2). The reduction of the oxygen concentration below 8 percent in an air-hydrogen-carbon-dioxide mixture will make the mixture nonflammable, whereas for a hydrogen-air-nitrogen system, a reduction of oxygen concentration to below 6 percent is required to reach the nonflammable range.

APPARATUS

4020

CP-1 back

The experimental variables, and to a lesser degree, the apparatus, have a pronounced effect on the development of a detonation from a flame or explosion (ref. 3). A detailed description is therefore considered valuable in understanding the results of the experiments. The apparatus was set up in an open field and designed to permit the controlled flow of oxygen and hydrogen gas into a steel duct. The propellant flow entered the duct through an injection plate which was sealed to the duct. The duct was fitted with a torch igniter and instrumented to record the duct pressure and gas velocity. For the studies involving the effect of water on the detonation, various spray bank configurations were installed in the duct. The additional studies on the effect of end loads due to detonating pressures were carried out by adding various designed elbows to the existing apparatus. The elbows were instrumented to measure the end pressures. The problem of structural loads caused by detonating pressures was investigated briefly by measuring the stress in a thin-walled duct which was attached to the existing apparatus. A series of runs was also made with carbon dioxide gas introduced into the system. A sufficient number of bottles were manifolded to permit the desired flow rate of gaseous carbon dioxide into the duct. The schematic diagrams in figures 6 and 7 indicate the essential features of the apparatus.

Duct Piping and Elbows

The duct consisted of several sections of 2-foot-diameter 3/8-inch seamless pipe. The duct was sealed to the 6-inch injection plate through a steel conical section 2 feet long. The propellant injection plate consisted of two $1\frac{1}{4}$-inch pipe openings for the gas inlet. The duct for the initial experiments was 27 feet long from the injection plate to the exit. With the addition of the elbows to the end of the straight section the total lengths were increased to about 34 feet. For the experiments to determine the stress developed in a thin-walled duct a 2-foot-diameter duct of 14-gage (0.0747-inch) stock was made and attached to the existing straight section of the pipe. A sketch of the thin-walled duct is given in figure 6. A number of 90° elbows were investigated to determine the end load pressures. Schematic diagrams of the elbows studied are presented in figure 7. Figure 7(a) shows a 90° straight miter made of

3/8-inch material, 7(b) a 90° straight miter with an elliptical ring at the intersection of the two cylinders of 14-gage material, 7(c) a sectioned mitered elbow of 16-gage material, 7(d) a sectioned mitered elbow of 12-gage steel reinforced with metal fins, 7(e) the same elbow with thrust supports welded to the side, 7(f) the same elbow with several of the reinforced metal fins removed, and 7(g) a 90° turn with a dished head on the extended horizontal section.

Propellant System

4020

Two gas cylinder manifolds supplied the oxygen and hydrogen to the duct. Lines 2 inches in diameter were used for the propellant system. The propellant flow rates were controlled by means of the upstream pressure through critical-flow orifices. The pressure was controlled through a diaphragm regulator and was turned on and off by a remote operating valve. Check valves were installed just upstream of the injection plate to prevent any backflow during a detonation. In addition, a helium flush system was installed in the hydrogen line to permit flushing of the line and duct between runs.

Water Systems

To study the effect of water on extinguishing the explosion or reducing the magnitude of the pressures, water injection at the following three positions in the duct (fig. 6) was investigated:

(1) Position 1: jet-wheel station. The design of many full-scale rocket facilities includes the introduction of water through spokes into the hot core of the rocket exhaust. The function of this water spray is to cool the rocket exhaust gases to saturation. A similar water spray system was installed in the detonation apparatus to determine the effect, if any, the jet-wheel flow had on the quenching of the explosions. The jet spoke station was located 3 feet from the injection plate.

(2) Position 2: two spray sections positioned 5 feet apart. The introduction of water sprays from two sections 5 feet apart was investigated to determine the effect of the increased cooling on the explosion. The first spray section was located 8 feet from the injection plate. Low-pressure swirl-type spray nozzles were used at each station.

(3) Position 3: five spray sections positioned 1 foot apart. The number of spray sections was increased and the distance between sections reduced to 1 foot. The first section was 8 feet from the injection plate. For the initial runs, the water was supplied to the various sections from a single header located above the duct. With the use of the more complicated spray systems the header was placed inside the duct.

Carbon Dioxide System

To permit the study of the effect of carbon dioxide gas on the hydrogen-oxygen explosions a number of bottles of carbon dioxide gas were manifolded, and the gas was led into the duct at the water jet-wheel station. The jet-wheel water flow was not used for these tests. The cylinders were commercial cylinders designed to empty in from 1.8 to 2.0 seconds. The carbon dioxide flow rate was maintained by connecting the desired number of bottles to the manifold and adjusting the hydrogen and oxygen flow rates to fill the duct within 1.8 seconds. In this manner the desired dilution ratio was obtained. A schematic diagram of the system is shown in figure 8.

4020

Ignition System

The ignition system consisted of a propane-oxygen torch mounted on the duct 3 inches from the injection plate. The flow of propane and oxygen to the igniter was preset and controlled by pressure regulators and critical-flow orifices. A spark was used to ignite the mixture. The operation of the igniter involved two steps, establishing a spark and introducing the propane and oxygen flow. For most of the runs the combustion of the hydrogen-oxygen mixture was initiated by the spark alone.

INSTRUMENTATION

Detonation-velocity measurements were made with ionization gaps inserted in the gas stream at 5-foot intervals. The impulse formed by the shorting of the gap by the combustion gases was recorded on an oscillograph. From the time between impulses and the position of gaps in the duct, average explosion velocities between the gaps could be determined. Runs made with considerable quantities of water sprayed into the duct resulted in the short-circuiting of the ionization gaps before the run; however, the velocity data for these runs were obtained from the static-pressure traces.

Static pressure during the passage of the detonation wave was measured by catenary diaphragm-type pressure pickups of the strain-gage type. The current from the pressure transducer was recorded on an oscillograph. The hoop stress in the thin-walled duct was obtained by installing strain gages on the duct and recording the output on the oscillograph. The locations of the pressure probes and ionization gaps are indicated in figure 6.

Typical pressure traces are shown in figure 9 along with the method of obtaining the values plotted on the figures. The records indicate a steep pressure rise which was the result of a detonation wave. Since

the pulse was extremely sharp, the sudden rise probably induced vibrations in the pressure pickup with the diaphragm oscillating about the actual pressure. In addition, since the resolution was quite indefinite, a line extrapolated back to the initial trace, as shown in figure 9, was used to obtain the detonation pressure. A calibrating voltage, corresponding to an established pressure, was impressed across the leads, and a normal displacement was obtained on the film. The distance of the extrapolated line at the initial trace was then compared with the calibrated displacement, and the actual detonation pressure was obtained. Values indicated by the peak of the trace are approximately 20 to 30 percent higher than the extrapolated values. 4020

PROCEDURE

Prior to the test all the valves and instruments were checked. A 35-millimeter camera was used to take pictures of the oscillograph traces during the run. Pressure calibration constants were placed on the oscillograph trace, and the film speed was adjusted to 60 inches per second. The desired pressures were established in the propellant flow lines, and the remote operating valves were opened for a specified time which would fill the duct with the hydrogen-oxygen mixture to an initial pressure of 1 atmosphere. The time of flow of the gases varied from 1.3 to 1.8 seconds. The propellant valves were then closed, the camera and instruments put on, and the spark ignited. The instruments were shut off immediately after the run, and the duct was flushed with helium. For the experiments in which water was introduced into the duct, the water flow was established before the propellants were introduced into the duct. For the experiments with carbon dioxide the carbon dioxide was introduced into the duct at the same time and for the same duration as the propellants.

RESULTS

Detonation of the hydrogen-oxygen mixture occurred in all runs in which sufficient carbon dioxide was not used. The introduction of water into the duct did not quench the detonation but did lower the peak detonation pressures. A summary of the data is given in table I. The initial runs were made without water sprayed into the duct and at an oxidant-fuel mole ratio of 1.2. The detonation pressure at station 2, which was 8 feet 9 inches from the igniter, was 329 lb/sq in. gage and increased to 357 lb/sq in. gage at station 3, which was 5 feet from station 2. A second run under the same conditions gave pressures of 316 and 322 lb/sq in. gage at the two stations. For the third run, the oxidant-fuel ratio was reduced to 0.84, and the pressures obtained were 290 and 286 lb/sq in. gage at the two stations. The detonation velocity was about 5000 feet per second for the initial runs made at an oxidant-fuel ratio of 1.2 and increased to about 7700 feet per second at the oxidant-fuel

ratio of 0.84. The remaining runs were made at a constant oxygen-fuel ratio of 0.84 with the variables including the amount and position of water injection, the amount of carbon dioxide, and the structure and design of the steel elbows. Runs 4 and 5 were made with the addition of water, introduced at the jet-wheel position. The water flow was 17 pounds per second. The detonation pressures measured at instrument station 2 were 350 and 375 lb/sq in. gage and decreased to 222 and 243 lb/sq in. gage at station 3. The detonation velocity of the first of the jet-wheel runs (run 4) increased from 7700 to 8160 feet per second between two areas, and the initial velocity for the second run was 6610 feet per second.

The next two runs, runs 6 and 7, were made with the water introduced at position 2 (two spray banks 5 feet apart). The total water flow was 13.3 pounds per second. A detonation took place in each of the two runs with the pressure increasing from about 263 lb/sq in. gage at instrument station 3 to 308 lb/sq in. gage at station 5. The detonation velocity decreased in traveling downstream from station 2 to station 5 from 9520 to 7620 feet per second for run 6 and from 12,700 to 10,900 feet per second for run 7.

Runs 8 to 11 were made with the water spray system 3, which consisted of five spray banks within 5 feet. The detonation pressures measured for run 8 were 161 lb/sq in. gage at station 2 and 123 lb/sq in. gage at station 3. The water flow rate was 26.4 pounds per second. For run 9, the water flow was increased to 34 pounds per second, and the pressures obtained were 121 lb/sq in. gage at station 3 and 207 lb/sq in. gage at station 5. The detonation velocity decreased from 8560 to 6660 feet per second from station 2 to station 5. Runs 10 and 11 were made with the water flow reduced to 17.2 pounds per second, and low detonation pressures were obtained. An additional pressure probe located at station 1 in the conical approach section, 5 inches from the igniter, indicated pressures of from 118 to 145 lb/sq in. gage. The pressure at station 5 for run 10 was 201 lb/sq in. gage and for run 11 was 172 lb/sq in. gage. The detonation velocities averaged about 7000 feet per second from station 3 to station 5 for the two runs.

Because of apparent failure of large quantities of water sprayed into the duct to quench the detonation, the studies were continued with the use of carbon dioxide as the inert diluent. The carbon dioxide was introduced into the duct through the jet-wheel station (water spray position 1) at the same time the propellants were introduced into the duct.

The first run with carbon dioxide, run 12, was made at an oxidant-fuel ratio of 0.84 and with water sprayed into the duct through spray system 3 (five bank sprays). The water flow was 17.2 pounds per second. The flow of carbon dioxide into the duct was set for 27.2 pounds per second, a rate which would result in an oxygen concentration in the duct

of 6.8 mole percent at the design fuel flow of 1.58 pounds per second of oxygen and 0.117 pound per second of hydrogen. The mixture did not ignite or produce a detonation. The following run, run 13, was made without carbon dioxide and at the same oxidant-fuel ratio as the previous runs but at a lower propellant flow rate. (The lower flow rate was used to permit more flexibility in the time of operation.) The ignition once again resulted in a detonation. The pressure measured at station 1 was 121 lb/sq in. gage and increased to 223 lb/sq in. gage at station 5. Two additional runs, runs 14 and 15, were made with carbon dioxide introduced into the duct at the same time as the propellants, and in each case combustion did not take place. For run 14, the oxygen concentration was reduced to 6.9 percent, and for run 15, to 5.9 percent. To study the effect of reduced quantities of carbon dioxide in the mixture, two runs were made with the resultant oxygen-hydrogen mixture within the flammable range. Run 16 was made with a carbon dioxide flow rate of 8.3 pounds per second, and run 17 with a carbon dioxide flow rate of 2.2 pounds per second. In each case combustion resulted. The only pressure reading that was available for run 16 indicated a pressure of 90 lb/sq in. gage at station 1, and the two readings obtained for run 17 were 60 lb/sq in. gage at station 1 and 116 lb/sq in. gage at station 5.

The second phase of the investigation was conducted with the aim of obtaining information helpful in the design of the structure to contain the detonation. The test model was modified by the addition of various 90° turns at the end of the straight section of the existing duct. The 90° elbows were instrumented with pressure pickups and the traces recorded on the oscillograph. The first elbow investigated was the standard 90° miter shown in figure 7(a). The pressure probes were located on the horizontal section and in the end, axially with the duct. Two runs were made, runs 18 and 19, with water introduced into the duct. The water flow rate was 17.2 pounds per second, and spray position 3 was used. The average side-on (static) pressures for the two runs (recorded by pressure probes mounted on the outer wall of the duct) were about 112 lb/sq in. gage at pressure probe station 1 and about 191 lb/sq in. gage at station 5. The face-on (total) pressures on the elbow were 543 lb/sq in. gage for run 18 and 620 lb/sq in. gage for run 17. The elbow was made of 3/8-inch steel and was not distorted in any way.

For further study of the effect of the detonating pressures on the duct material, a thin-walled straight duct was attached to the end of the existing straight section (fig. 6), and the stress developed was measured. The hoop stress on the duct was measured by means of strain gages cemented on the surface of the thin-walled duct. Two runs, runs 20 and 21, were made with the thin-walled duct. The oxidant-fuel ratio was 0.84, and water spray position 3 was used. The water flow was 17.2 pounds per second. The side-on detonation pressures developed (198 lb/sq in. gage at station 3 and 172 lb/sq in. gage at station 5) were comparable to the values obtained in the previous runs, and the stress developed in the

4020

wall was about 38,000 psi. The fact that the thin-walled duct was not distorted in any way indicated that the duct could probably take a higher stress.

The allowable stress used for the design of most of the elbows investigated (thin elbows) was about 38,400 psig (48,000 X joint efficieny of 0.8). In addition, to obtain the maximum detonation pressures for the tests all the runs with the additional elbows were made without the use of water in the duct and at an oxidant-fuel ratio of 0.84. Run 22 was made with the single 90° miter elbow constructed of 14-gage material (fig. 7(b)). The side-on pressure at station 6, $11\frac{1}{2}$ feet upstream of the end of the elbow, was 294 lb/sq in. gage, and the face-on pressure on the elbow (station 8) was 910 lb/sq in. gage. The detonation pressures caused some distortion in the elbow in that there was a bulging in the surface of the elbow axial with the horizontal duct. In addition, the elbow apparently failed in bending because of buckling at the flange. A diagrammatic sketch of the distortion is shown in figure 10. The effect of the detonation pressure on a multisection elbow was studied by installing the sectioned elbow shown in figure 7(c). Run 23, made with this elbow at an oxidant-fuel ratio of 0.84 and without water in the duct, gave at station 1 a pressure of 157 lb/sq in. gage and at station 5 a value of 198 lb/sq in. gage, while for the face-on pressure on the elbow (station 8) a value of 1250 lb/sq in. gage was read. A value of 505 lb/sq in. gage was obtained at station 7 on the bottom of the elbow. The pressures and loads were too great, for the elbow failed completely in bending near the flange. Photographs of the elbow after the run are shown in figure 11. The elbow used for run 23 was constructed of 16-gage material. For run 24, an elbow similar to that used for the previous run was designed, but it was reinforced by metal ribs around various sections and was constructed of 12-gage material (figs. 7(d) and 12). The detonation pressures were 203 lb/sq in. gage (side-on pressure) at station 6 and 910 lb/sq in. gage (face-on pressure) at station 8. A value of 781 lb/sq in. gage was obtained at station 7 on the bottom of the elbow. The loads exerted by the detonation did not bend or twist the elbow but did induce several cracks in the horizontal approach section to the elbow. The elbow apparently withstood the impact load but was questionable with respect to the bending moment near the flanged connection. The bending moment was probably caused by force exerted on the bottom of the elbow. Supporting thrust legs, indicated in figure 7(e), were welded to the elbow to take the bending load. Three runs were made, runs 25, 26, and 27, with this installation, and it proved satisfactory. The average side-on pressure for station 6 was 248 lb/sq in. gage with a face-on pressure of 870 lb/sq in. gage for run 25 and 912 lb/sq in. gage for run 26. The pressure at the lower section of the elbow, station 7, taken in run 27 was 728 lb/sq in. gage. No effect of the pressures was noticed on the structure.

4020

GP-2

To study the role of the supporting ribs welded around the elbow with the thrust support in position several ribs were removed, as indicated by figure 13, and run 28 was made. The pressures obtained were 272 lb/sq in. gage at station 4, 246 lb/sq in. gage at station 6, and a face-on pressure of 882 lb/sq in. gage at station 8. The elbow was not distorted, but several cracks were noticed in the structure where some of the ribs had been removed. Studies of the elbow indicated that the cracks were probably due to the damaging of the welds where the ribs had been removed.

The next series of runs, runs 29, 30, and 31, was made with a modified elbow consisting of a dished head as the end piece (fig. 7(g)). The initial run with this elbow gave a static pressure of 206 lb/sq in. gage at station 6 and a total pressure (face-on) of 1020 lb/sq in. gage. The detonation resulted in complete ripping open of the vertical duct at the weld and a distortion of the dished head to form a sphere of smaller radius. A new vertical section was installed, and runs 30 and 31 were made. The configuration withstood the forces of the detonation, for no further stretching of the head occurred, and the vertical section remained satisfactory. The average pressures obtained for the two runs were 253 lb/sq in. gage at station 6 (side-on) and 786 lb/sq in. gage at the dished head (station 8).

4020

DISCUSSION

The experiments indicated that with the duct loaded with hydrogen and oxygen the discharge of an ignition source resulted in a detonation. The experiments were carried out with oxygen flows of about 1.2 pounds per second and hydrogen flows of 0.12 pound per second, flows comparable to that from a 400-pound-thrust rocket engine.

The experimental detonation pressures obtained in the initial runs without the use of water in the duct were higher than the theoretically calculated values. The theoretical calculations indicated pressure rises of about 19 to 1 (275 lb/sq in. abs), while the experimental values were about 24 to 1 (335 lb/sq in. abs). The errors involved in the interpretation of the pressure record and in the assumption that the duct was filled with the hydrogen-oxygen mixture to a pressure of 1 atmosphere may account for the difference in values. The experimental detonation velocity for the initial runs gave a spread of values which may be accounted for by the error in interpretation and in the film speed. The experimental detonation velocity at an oxidant-fuel mole ratio of 1.2, without water in the duct, was about 5000 feet per second compared to the theoretically calculated value of about 7000 feet per second. At an oxidant-fuel mole ratio of 0.82 without water in the duct the experimental detonation velocity was similar to the calculated value of about 8000 feet per second.

The introduction of water into the duct through the jet-wheel station did not reduce the detonation pressure at station 2, but apparently the continued mixing of water, steam, and gas was sufficient to reduce the pressure at station 3. The question of whether the detonation pressure would have been reduced farther downstream with the use of the jet-wheel water could not be answered, since additional pressure probes were not installed for these runs. It is believed, however, that the detonation pressure would have increased to its peak value farther downstream in the duct. The increase in detonation pressure some distance downstream of the water injection position was obtained with the runs made with water injection at position 2 (two spray curtains 5 feet apart). The use of the two spray sections was based on the belief that the gases would be cooled and the mixture diluted with sufficient steam to result in a lower detonation pressure. Results of the experiments (runs 6 and 7) indicated an initial lowering of the detonation pressure to about 260 lb/sq in. gage at station 3 and increases to 270 lb/sq in. gage at station 4 and to 308 lb/sq in. gage, approximately the theoretical maximum, at station 5. Apparently the effect of the water was restricted to a very short volume of the duct. The flow of water at water position 2 was 13.3 pounds per second compared to the 17 pounds per second used in the jet-wheel studies.

4020

CP-2 back

The use of a more finely atomized and distributed water curtain did, however, indicate a reduction in pressures throughout the duct. The use of water spray position 3 (five banks within 5 feet) served to both slow the detonating velocity and decrease the pressure. The distribution of water was more effective in reducing the detonation pressure than the quantity of water used. The water flow was varied from 17.2 to 34 pounds per second and essentially no difference in pressures was obtained. The pressures varied from 167 at station 2 to about 200 lb/sq in. gage at station 5 with this spray system. In all likelihood, if it were possible to locate sufficient water sprays in the transition region between the combustion and detonation front, the flame would be extinguished and a detonation prevented.

A further effect of the water in the duct was to decrease the duration of pressure as determined from the pressure traces. A plot of the pressure-time history with and without the addition of water is given in figure 14. In general, pressure existed for approximately 10 milliseconds when water was used and 20 milliseconds without water. It is probable that sufficient water was present to quench the reaction behind the detonation wave.

The rate of buildup to a detonation for the hydrogen-oxygen combination is extremely rapid, as indicated from the results obtained from the pressure probe at station 1. The probe was located 5 inches from the igniter, and the results indicated a pressure increase to about 120 lb/sq in. gage or to within 40 percent of the maximum value.

Results of the tests with carbon dioxide as the inert diluent indicated that the hydrogen-oxygen mixture can be taken out of the combustible range by reducing the oxygen concentration to below 8 percent. The experiments indicated that the method of introducing the carbon dioxide is not critical, since success was obtained by merely leading the pipes containing the carbon dioxide just into the outer edge of the duct (fig. 8). The carbon dioxide was introduced as a gas, and over 95 percent remained as a gas during the expansion. This was possible because of the design of the bottles and manifolds. Increasing the oxygen concentration to 17 and 34 percent in the mixture by the addition of smaller quantities of carbon dioxide placed the mixture in the flammable range, and ignition resulted in a detonation. The pressures, however, were lower than those obtained without the use of carbon dioxide.

4020

Results of the second phase of the study, which involved the design of equipment to contain the detonation, indicated that material subjected to sudden detonation loads can be subjected to extremely high stresses without failing. Tests carried out with the thin-walled duct (runs 20 and 21) indicated that hoop-stress values of about 38,000 psi are conservative. The pressures measured with the duct configuration were static or side-on pressures, since the pressure probes were all mounted on the outer wall. Proposed exhaust ducting configurations for rocket test facilities that require a 90° turn would subject the elbow to the total or face-on pressure rather than just the static pressure. The initial elbow investigated was constructed of 3/8-inch-thick material (fig. 7(a)) and was satisfactory under all conditions. The scaling of this thickness to a practical field size exhaust duct would result in prohibitive thickness; it was therefore considered advisable to continue the tests using smaller stock. The thickness of the material involved in the design of most of the remaining elbows investigated was based on the assumption of thin-walled-duct behavior, and the pressure load taken by hoop tension in the duct. The duration of the dynamic load was considered to be a few milliseconds, and the allowable stress, 38,400 psi, was based on 160 percent of the yield point and an 80-percent efficiency factor.

The initial elbows fabricated (figs. 7(b) to (d)) and tested under detonation conditions suffered some sort of failure. In general, the principal damage was caused by the buckling or cracking of the 90° elbow at the flanged connection to the main duct. The single-miter elbow (fig. 7(b)) in addition to bending near the flanged connection was bowed out at the elbow section axially with the duct (fig. 10). The total pressure was 910 lb/sq in. gage, which is equivalent to a pressure-rise ratio of about 63 compared to a static-pressure-rise ratio of about 21.

The next elbow investigated was a multimiter elbow shown in figure 7(c). The use of a multimiter long elbow in place of the sharp single-miter 90° elbow would permit the gradual transition of the stress to the

duct and thus prevent the discontinuity stresses at the juction from exceeding the membrane stress in either part. A single run with this elbow resulted in severe buckling near the flanged connection (fig. 11). The stress concentration was considerably higher on this duct than on any of the others investigated because the material used was 16-gage instead of 14-gage. The pressure on the section of the elbow axial with the duct was 1250 lb/sq in. gage, while on the bottom of the elbow section a value of 505 lb/sq in. gage was obtained. The pressure 1250 lb/sq in. gage was the highest detonation pressure recorded in the program and may not be a correct value because of the destruction of the elbow. The fourth elbow investigated was a multimiter elbow similar to the previous one but constructed of 12-gage material and reinforced by metal ribs welded to the structure (fig. 7(d)). The detonation (run 24) resulted in cracks in the horizontal section near the flanged connection to the horizontal duct and was believed to be caused by the excessive bending moment.

4020

To determine the effect of thrust-supporting members on the elbows, the next runs were made with the rib-reinforced multimiter elbow modified to include two supporting members (fig. 7(e)). This configuration resulted in completely satisfactory operation. The total pressures on the elbow axial with the duct were about 900 lb/sq in. gage (pressure ratio of 61).

A subsequent run (run 28) was made with some of the supporting ribs removed (fig. 13), but the results were not conclusive, since a considerable number of cracks developed by the detonation were along the areas where the ribs had been removed. It was believed that when the ribs were cut away the structure was weakened.

The final elbow configuration investigated consisted of an L-shaped pipe with the dished head axial with the duct (fig. 7(f)). The detonation (total) pressure measured at the dished head for the first run was 1020 lb/sq in. gage and was sufficiently large to distort the dished head and rip open the vertical duct. The distortion was an extension of the center of the dished head toward a spherical shape of smaller radius. It was believed that the weld on the vertical section was faulty, because after it was repaired the next two runs resulted in an average total pressure of 786 lb/sq in. gage, and no further damage was done to the structure. The higher value of pressure obtained in the first of the three runs may be in error partly because of yielding of the metal.

SUMMARY OF RESULTS

An investigation to determine the detonation combustion pressures of hydrogen-oxygen mixtures at atmospheric pressure in a 2-foot-diameter duct gave the following results:

1. The spark ignition of hydrogen-oxygen gas mixtures in a 2-foot-diameter duct at a pressure of 1 atmosphere resulted in detonation combustion.

2. The use of water jets and water sprays distributed through the duct did not prevent a detonation but did reduce the peak pressures.

3. The transition zone from normal combustion to a detonation for the hydrogen-oxygen mixture is extremely short; therefore, it is difficult to introduce sufficient diluents to prevent a detonation. Detonation was prevented by the addition of sufficient carbon dioxide to make the mixture nonflammable. 4020

4. Equipment designed to contain the detonation should consider static-pressure-rise ratios of about 25 and total-pressure-rise ratios of about 60.

5. The design stress of materials to contain detonations can be considerably higher than used for normal applications because of the extremely short exposure time. Values of design stress about 160 percent of the normal curve were completely satisfactory.

6. The use of thrust support members for 90° turns was necessary to prevent excessive bending moments in the horizontal piping.

Lewis Flight Propulsion Laboratory
National Advisory Committee for Aeronautics
Cleveland, Ohio, January 9, 1957

REFERENCES

1. Lewis, Bernard, and von Elbe, Guenther: Combustion, Flames and Explosions of Gases. Academic Press, Inc., 1951.

2. Coward, H. F., and Jones, G. W.: Limits of Inflammability of Gases and Vapors. Bull. No. 279, Bur. Mines, 1939.

3. Jost, Wilhelm: Explosions and Combustion Processes in Gases. McGraw-Hill Book Co., Inc., 1946.

TABLE I. - SUMMARY OF DATA

Run	Oxidant-fuel mole ratio	Water flow rate, lb/sec	Position of water injection	Carbon dioxide flow rate, lb/sec	Detonation pressure, lb/sq in. gage								Detonation velocity, ft/sec							Modification	Condition of modification after run
					Station								Station								
					1	2	3	4	5	6	7	8	1-2	2-3	3-4	4-5	1-3	3-5	5-8		
1	1.2	----	-	----		329	357							5000							
2	1.2	----	-	----		318	322							4820							
3	.84	----	-	----		290	286							7700	6,600	6,600					
4		17.0	1	----		350	222							7700	8,160						
5		17.0	1	----		375	243							6610							
6		13.3	2	----			263	276	308						9,520	7,620					
7		13.3	2	----			281	274	307						12,700	10,900					
8		26.4	3	----		161	125														
9		34.0		----		167	121	172	207					8560	12,000	8,860					
10		17.2		----	118		248		201								8,700	6600			
11				----	145				172								8,630	7500			
12				27.2	(a)		(a)		(a)												
13				----	121		158		225								8,710	6020			
14				18.3	(a)		(a)		(a)												
15				22.2	(a)		(a)		(a)												
16				8.3	90																
17				2.2	80				116												
18				----	115		174		181			543					8,700	5980		Elbow (fig. 7(a))	Satisfactory
19				----	110		193		202			620					8,700	7500		Elbow (fig. 7(a))	Satisfactory
20				----	143				172								11,240	6320		Thin-walled duct	Satisfactory (withstood hoop stress of 38,000 psi)
21				----	121		198										8,690	6570		Thin-walled duct	Satisfactory (withstood hoop stress of 38,000 psi)
22		----	-	----						294		910							7540	Elbow (fig. 7(b))	Damaged
23		----	-	----	157					198	505	1250							6220	Elbow (fig. 7(c))	Damaged
24		----	-	----						203	781	910							6890	Elbow (fig. 7(d))	Damaged
25		----	-	----						280		870							7040	Elbow (fig. 7(e))	Satisfactory
26		----	-	----						235		912							7120	Elbow (fig. 7(e))	Satisfactory
27		----	-	----						250	728									Elbow (fig. 7(e))	Satisfactory
28		----	-	----				272		246		882							6900	Elbow (fig. 7(f))	Damaged
29		----	-	----						206		1020							7100	Elbow (fig. 7(g))	Damaged
30		----	-	----						252		788							6580	Elbow (fig. 7(g))	Satisfactory
31		----	-	----						254		785							6900	Elbow (fig. 7(g))	Satisfactory

[a]No combustion.

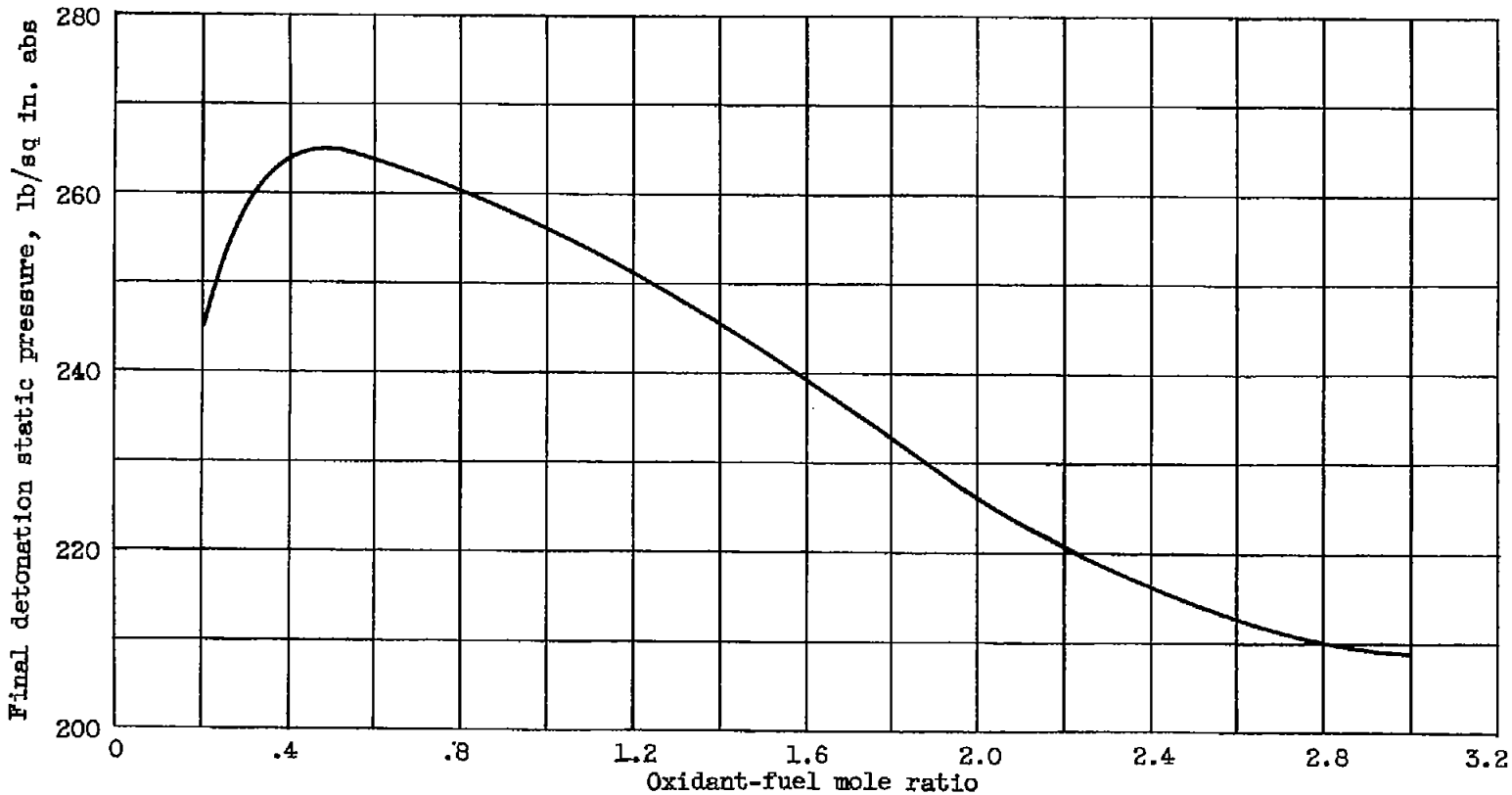

Figure 1. - Detonation pressure against oxidant-fuel mole ratio for hydrogen-oxygen mixture. Initial pressure, 1 atmosphere.

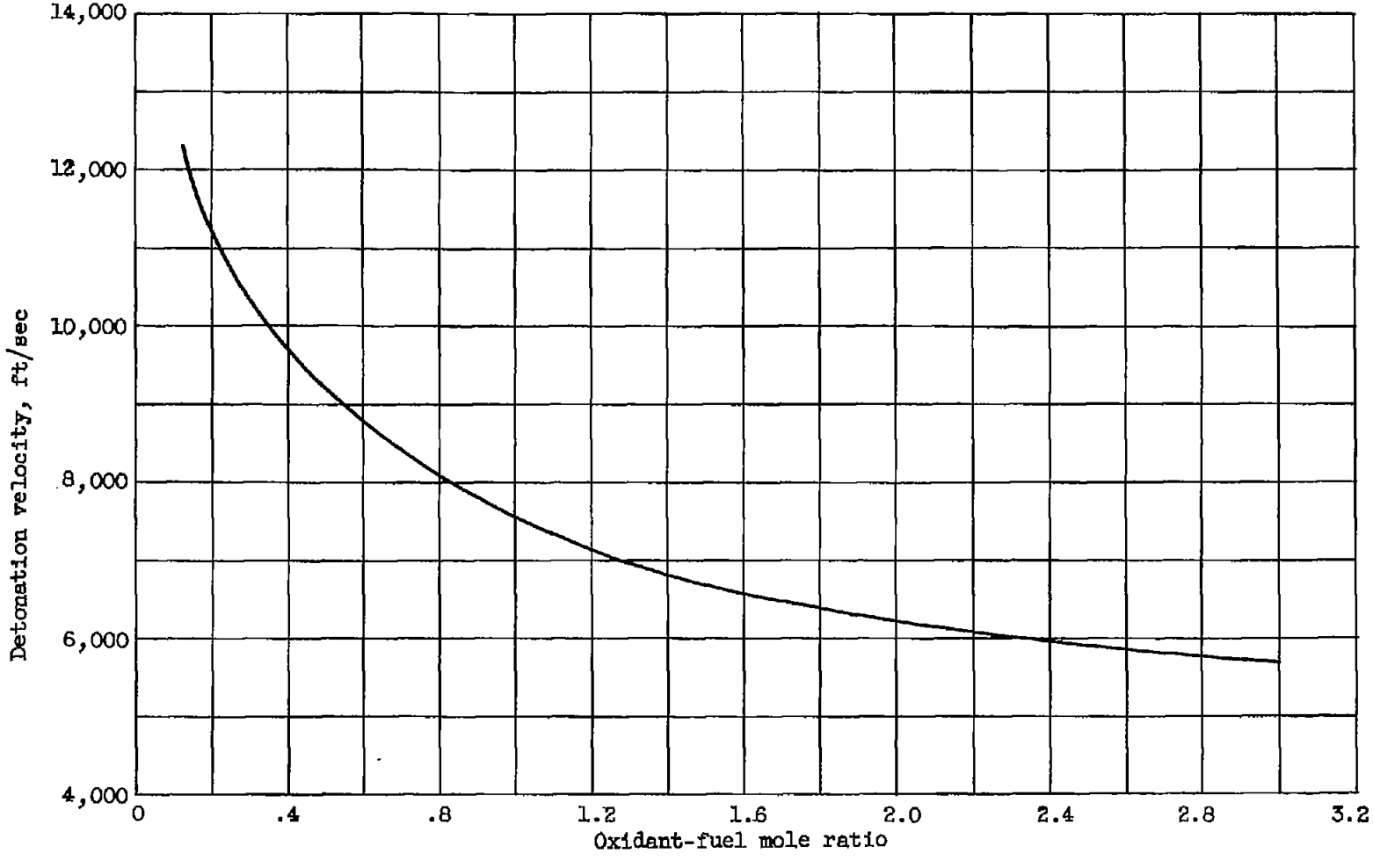

Figure 2. - Detonation velocity against oxidant-fuel mole ratio for hydrogen-oxygen mixture.

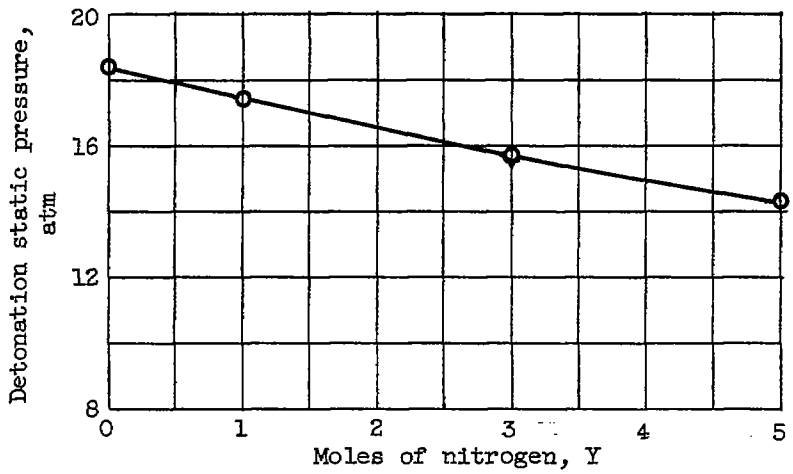

Figure 3. - Effect of excess nitrogen on hydrogen-oxygen explosion. Initial pressure, 1 atmosphere. Mixture composition, 2 moles of hydrogen, 1 mole of oxygen, Y moles of nitrogen.

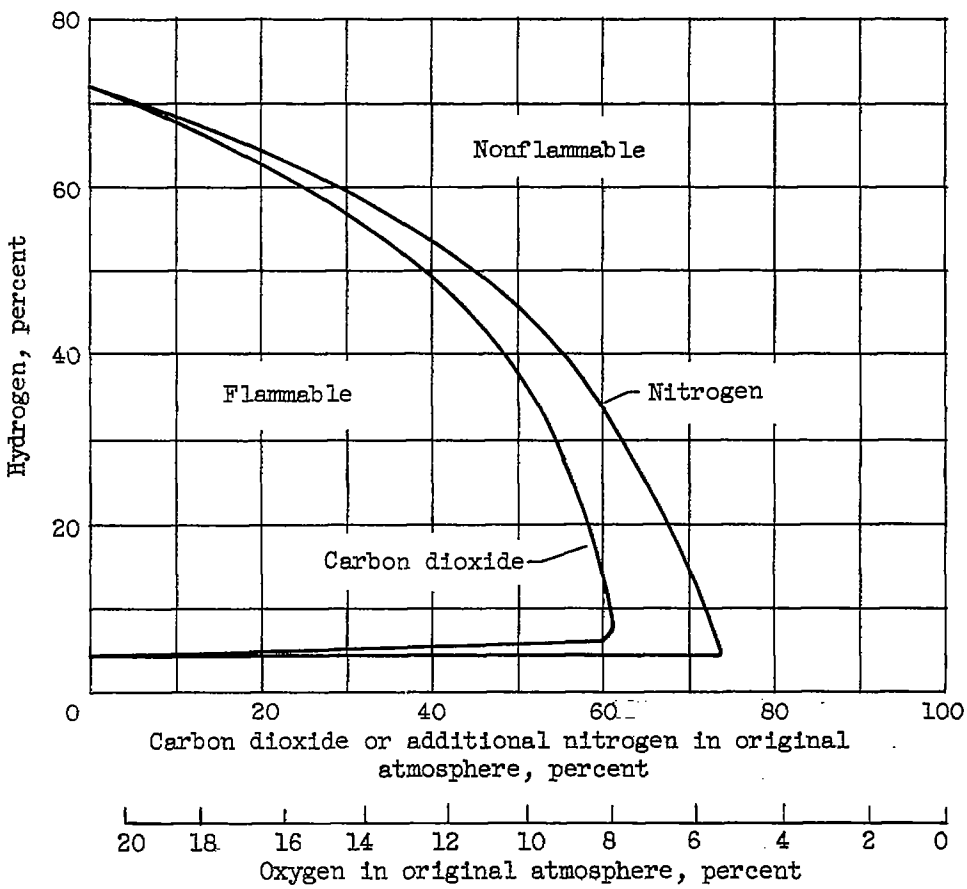

Figure 4. - Limits of inflammability of mixtures of hydrogen, air, and carbon dioxide or nitrogen (ref. 2).

4020

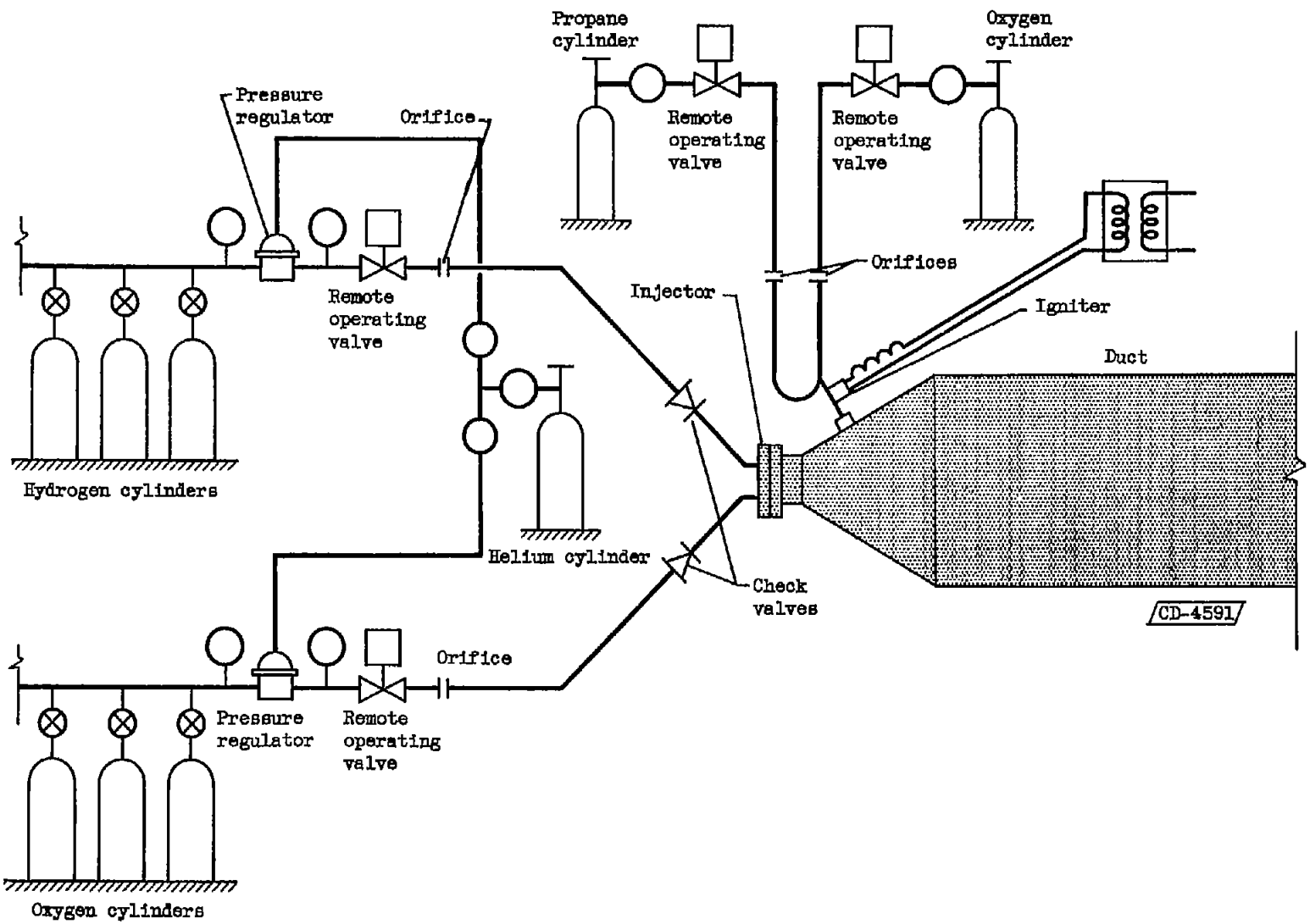

Figure 5. - Propellant and igniter system.

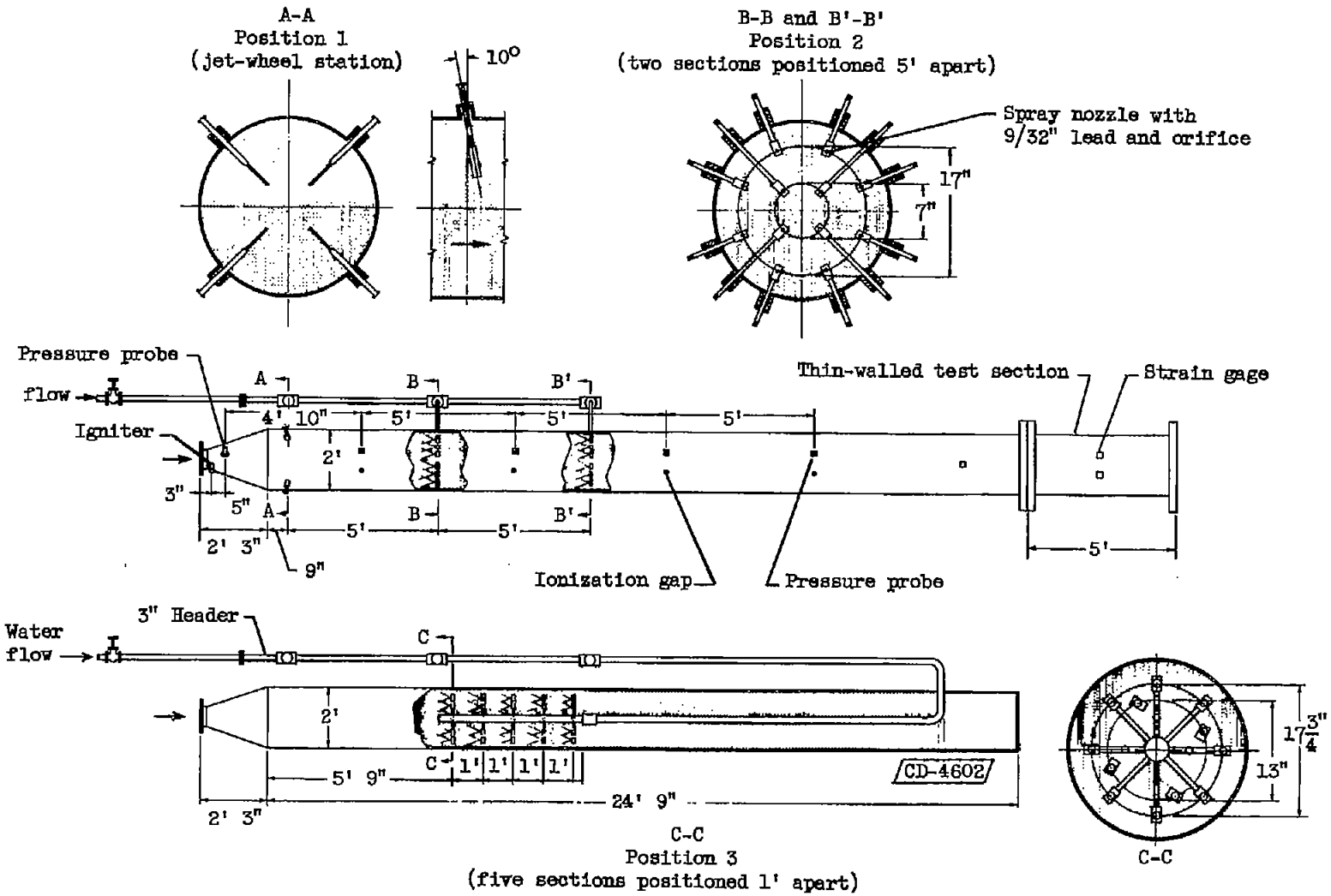

Figure 6. - Duct, instrumentation, and water spray systems.

4020

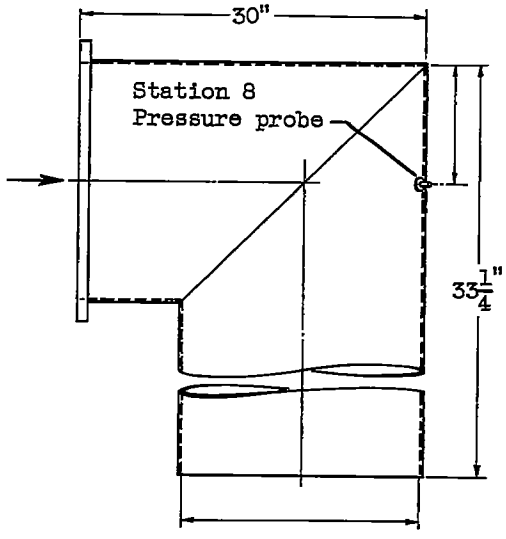

(a) 90° Straight miter; 3/8" wall.

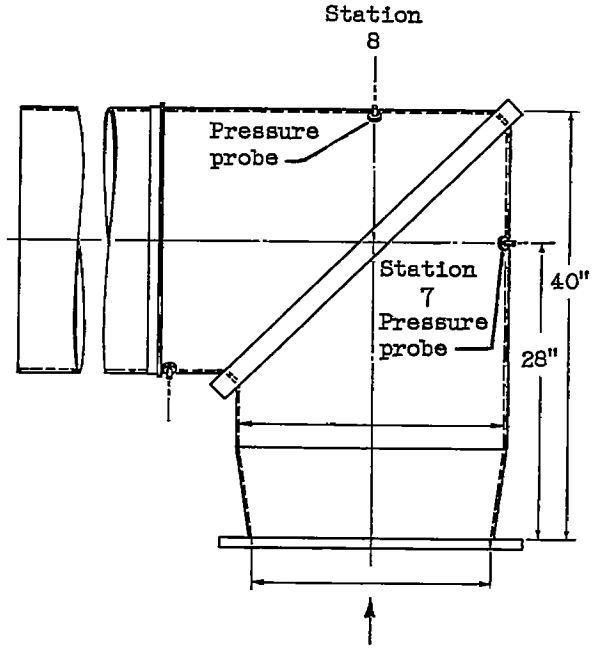

(b) 90° Straight miter; 14-gage steel.

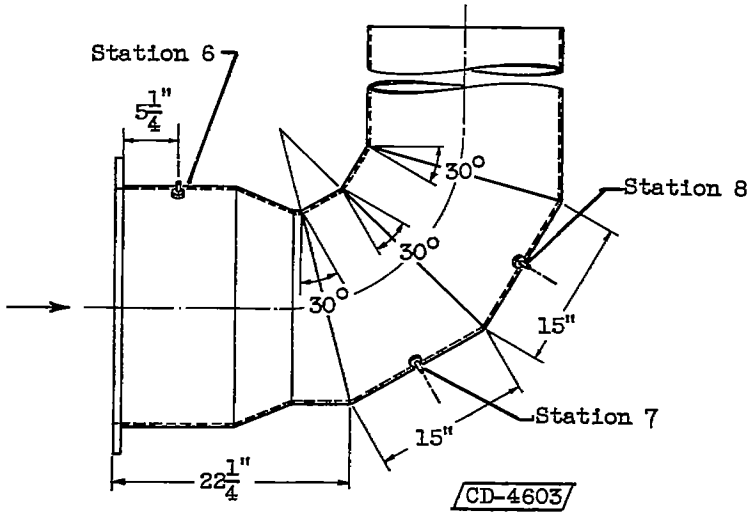

(c) Sectioned miter; 16-gage steel.

Figure 7. - Steel elbows investigated.

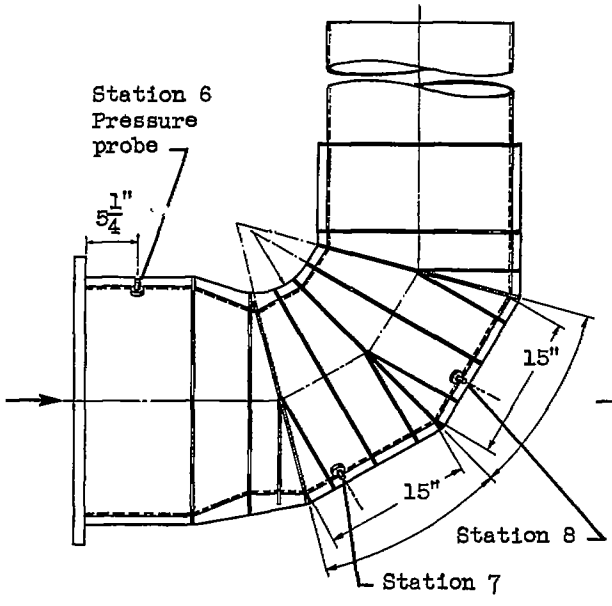

(d) Sectioned miter; 12-gage steel; reinforced with welded fins.

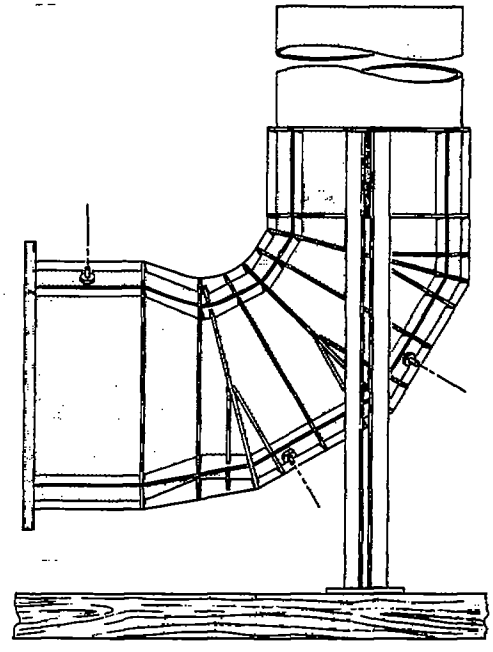

(e) Same as (d), plus thrust supports.

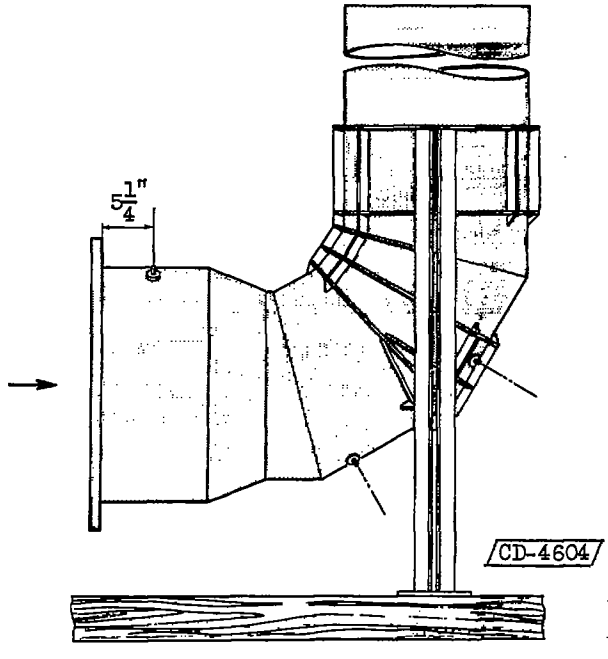

(f) Same as (e), with several ribs removed.

Figure 7. - Continued. Steel elbows investigated.

4020

4020

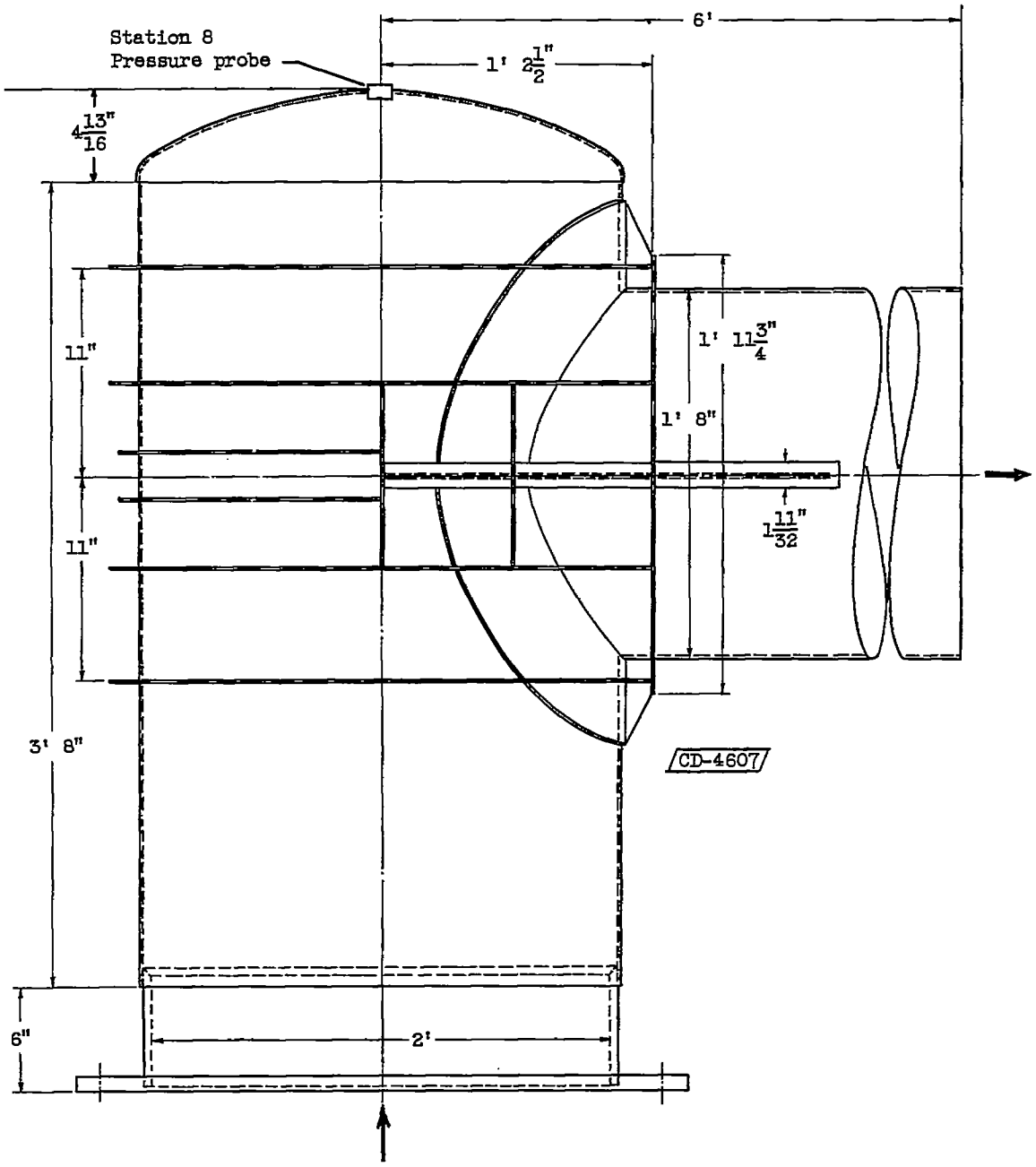

(g) Dished head.

Figure 7. - Concluded. Steel elbows investigated.

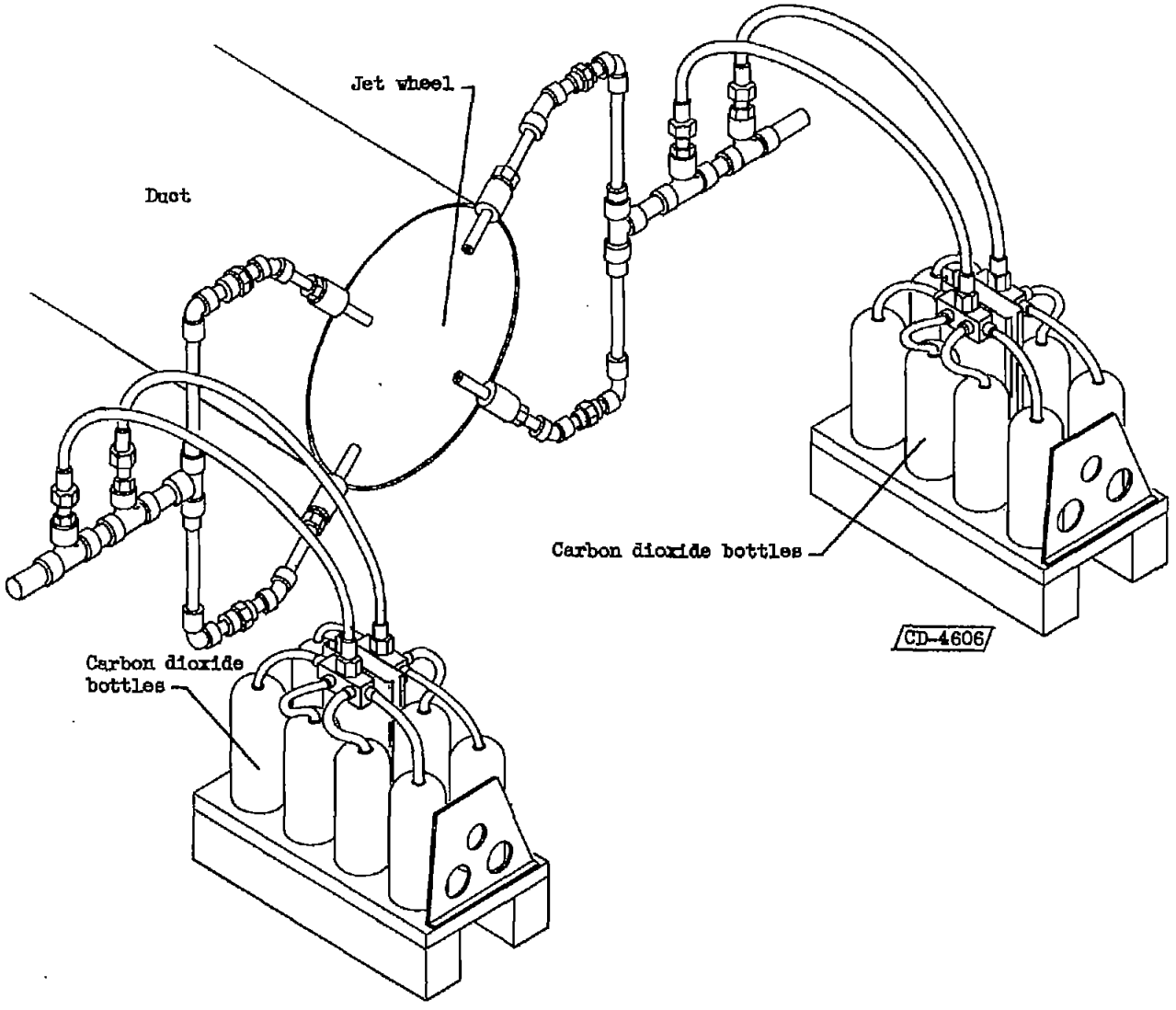

Figure 8. - Carbon dioxide system.

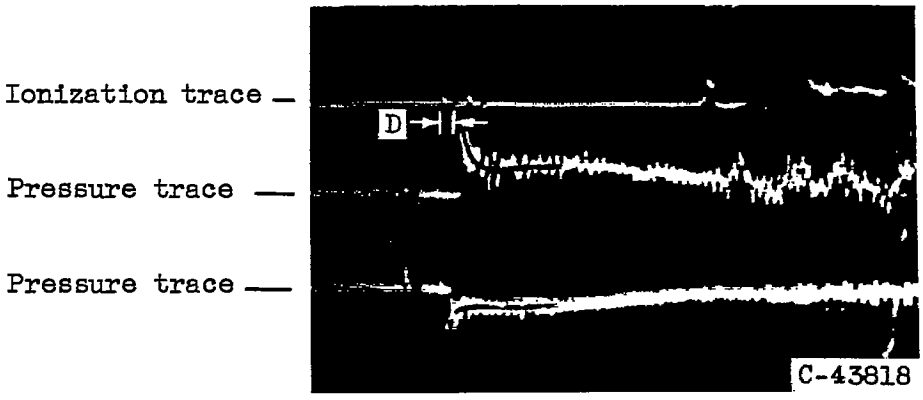

Detonation-Velocity Calibration

$$\text{Detonation velocity} = \frac{\text{Distance between probes}}{\text{D/Film speed}}$$

$$= \frac{5\ \text{ft}}{\text{D}/\frac{60\ \text{ft}}{12\ \text{sec}}}$$

Pressure Measurement

(a) Run 3. Film speed, 60 inches per second.

Figure 9. - Typical pressure and ionization traces.

4020

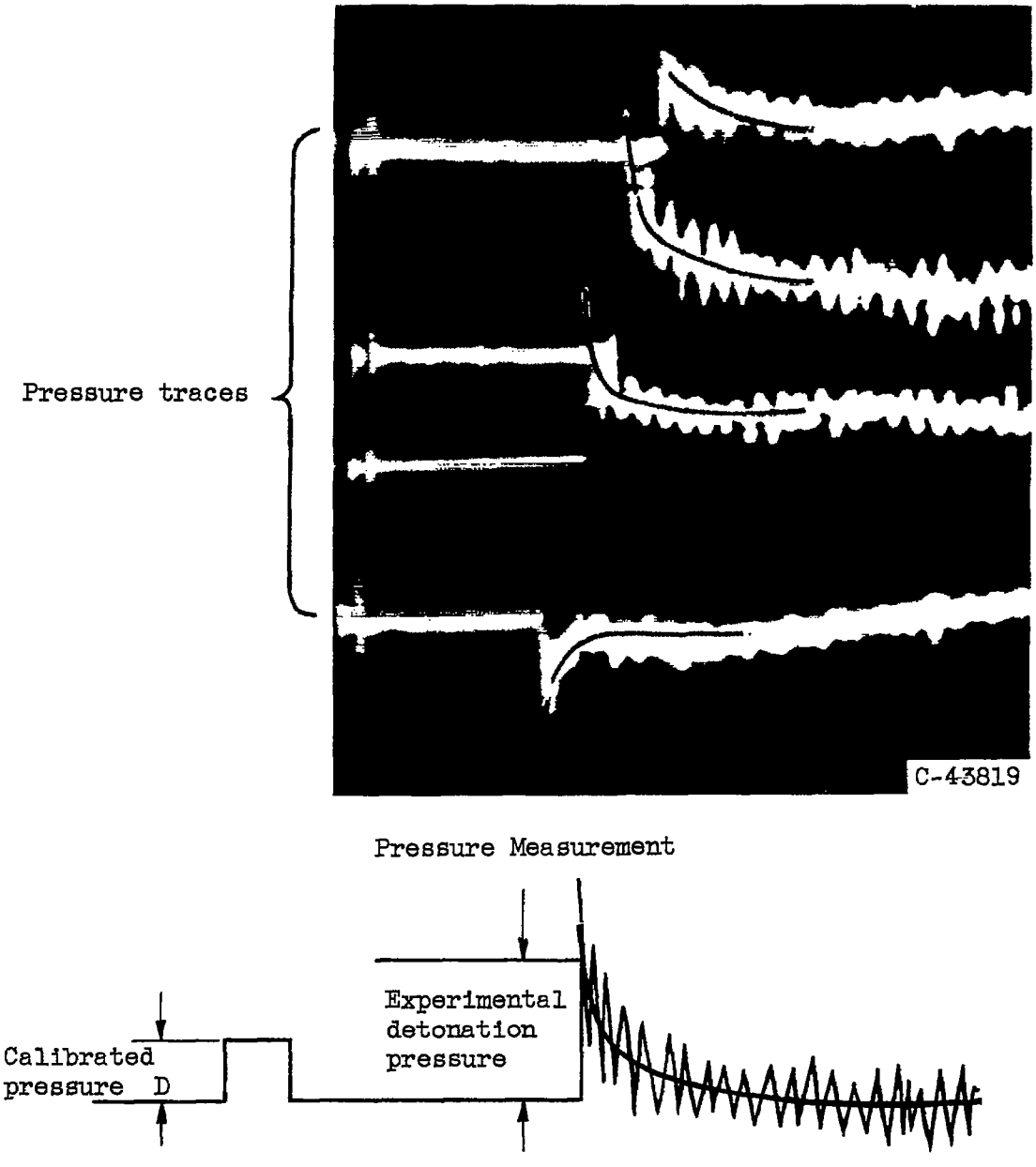

(b) Run 10.

Figure 9. - Concluded. Typical pressure and ionization traces.

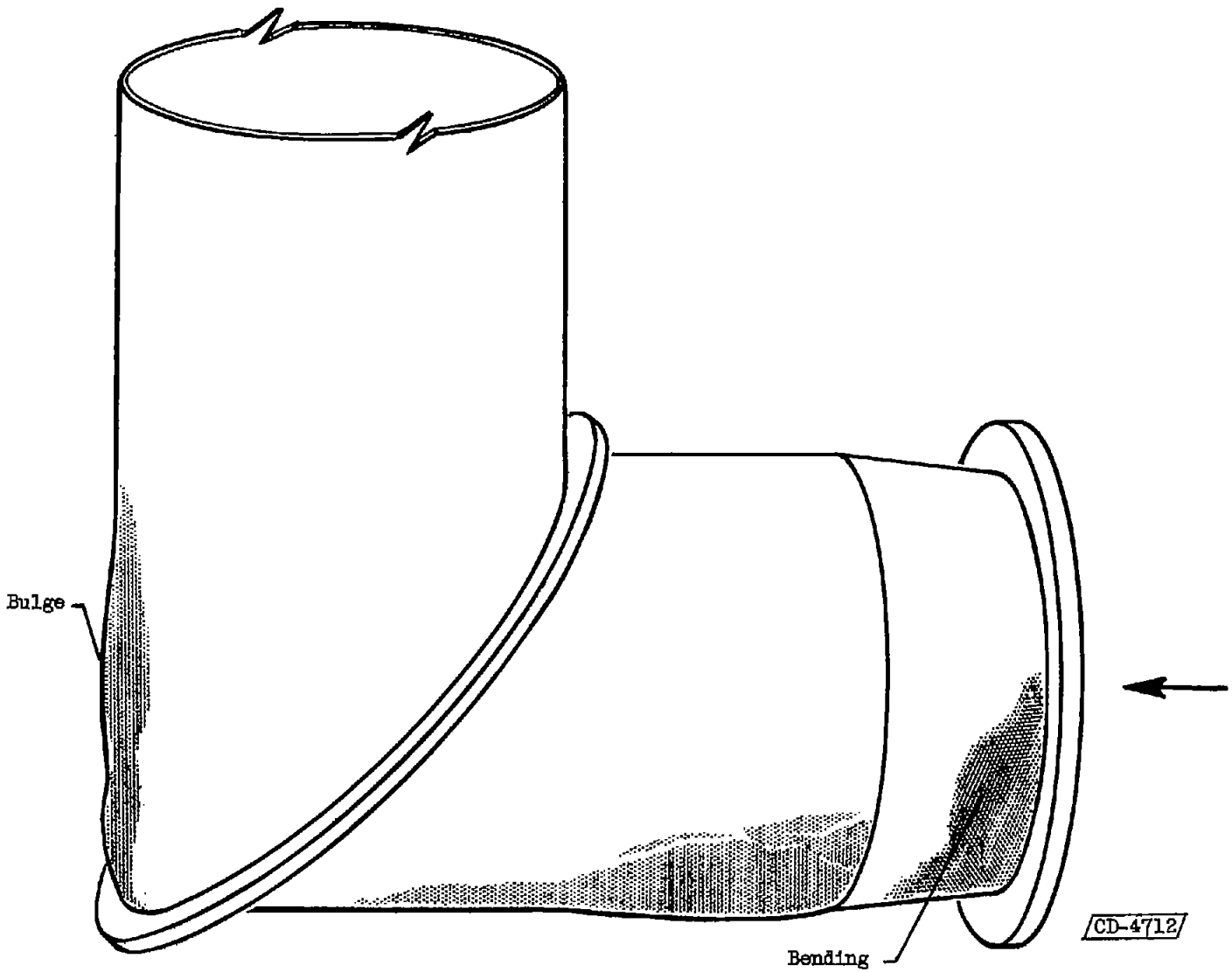

Figure 10. - Failure of single 90° miter elbow.

4020

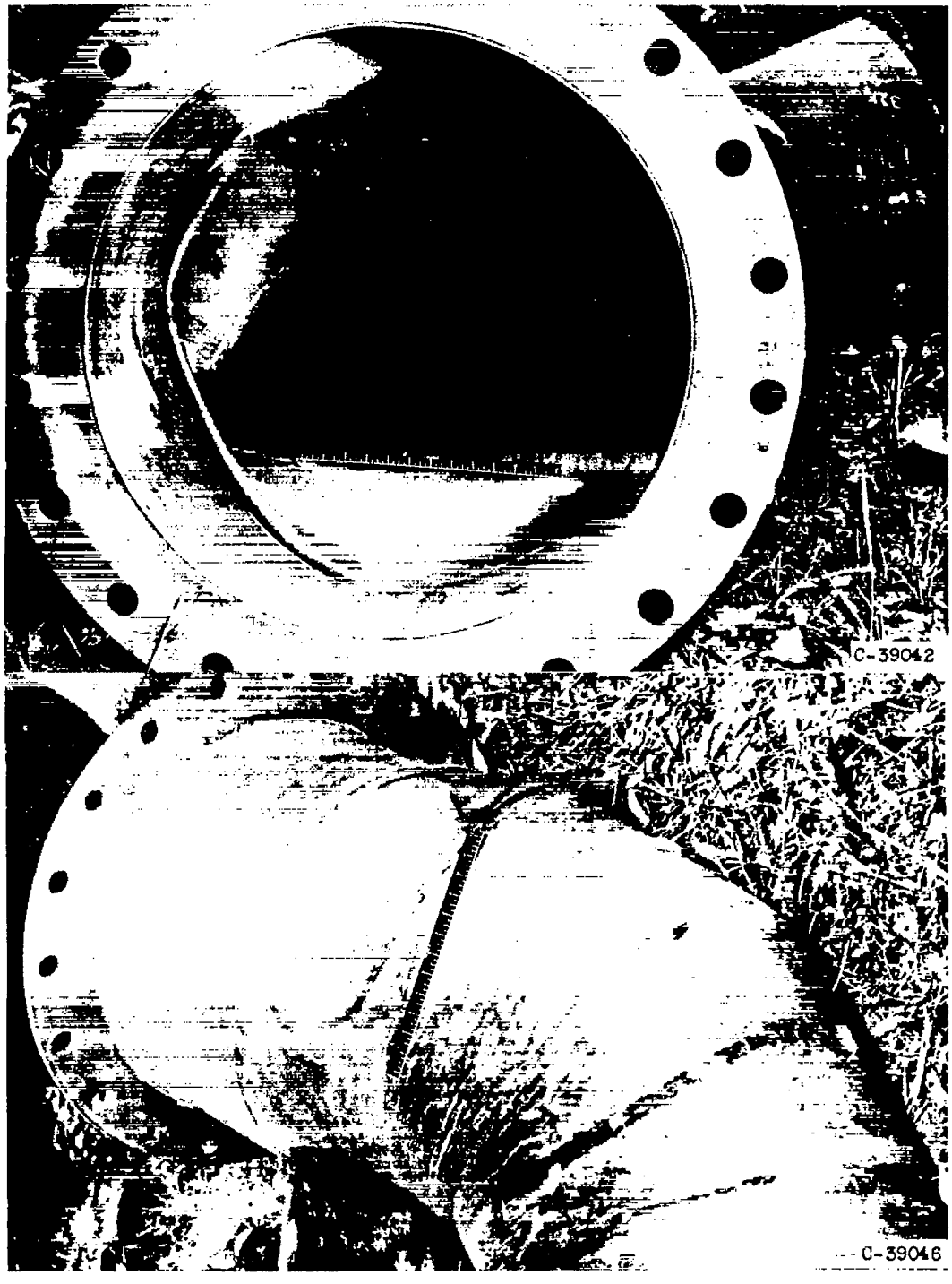

Figure 11. - Damage to multisectioned elbow constructed of 16-gage steel (fig. 7(c)).

4020

Figure 12. - Multisectioned elbow with supporting ribs (fig. 7(d)).

4020

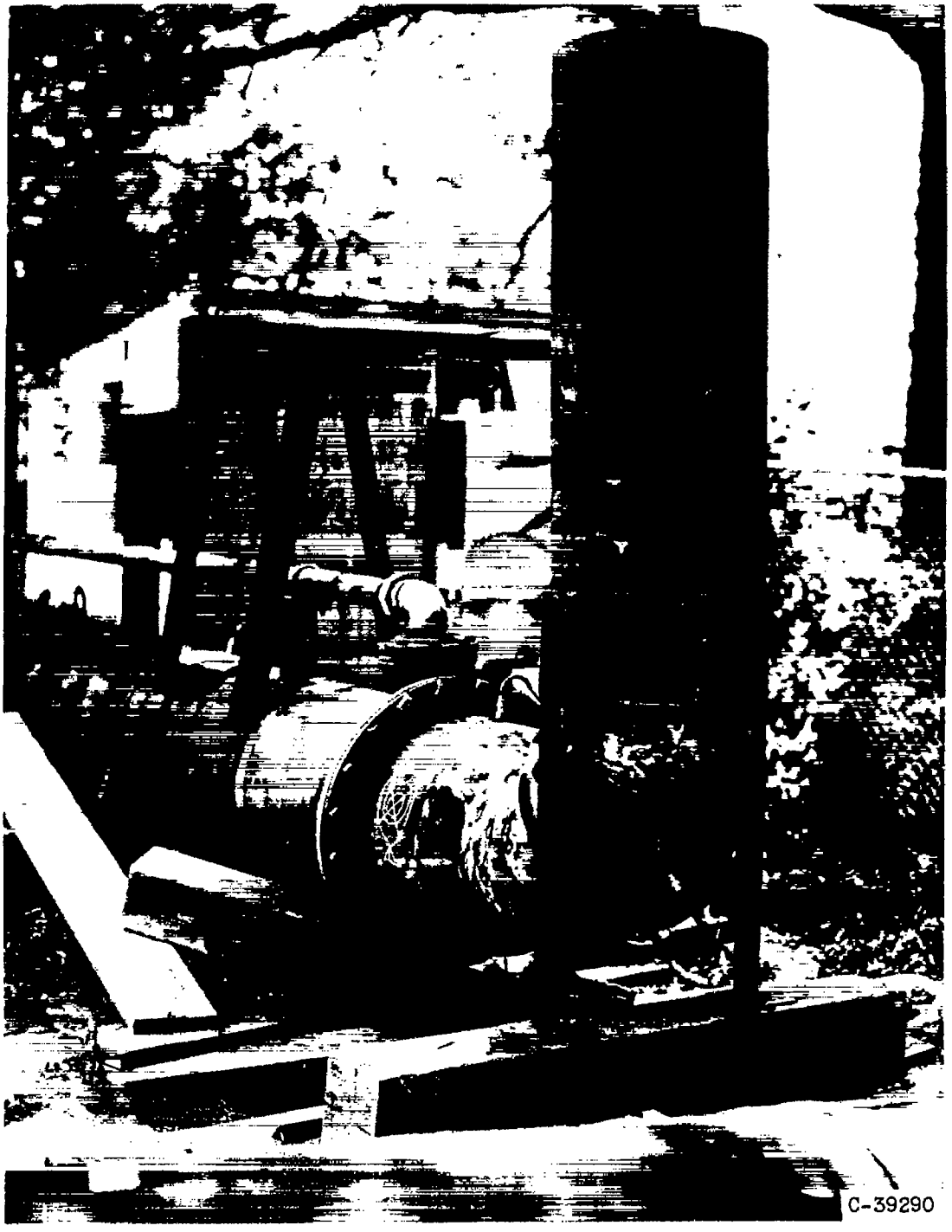

Figure 13. - Multisectioned elbow plus supports with several ribs removed.

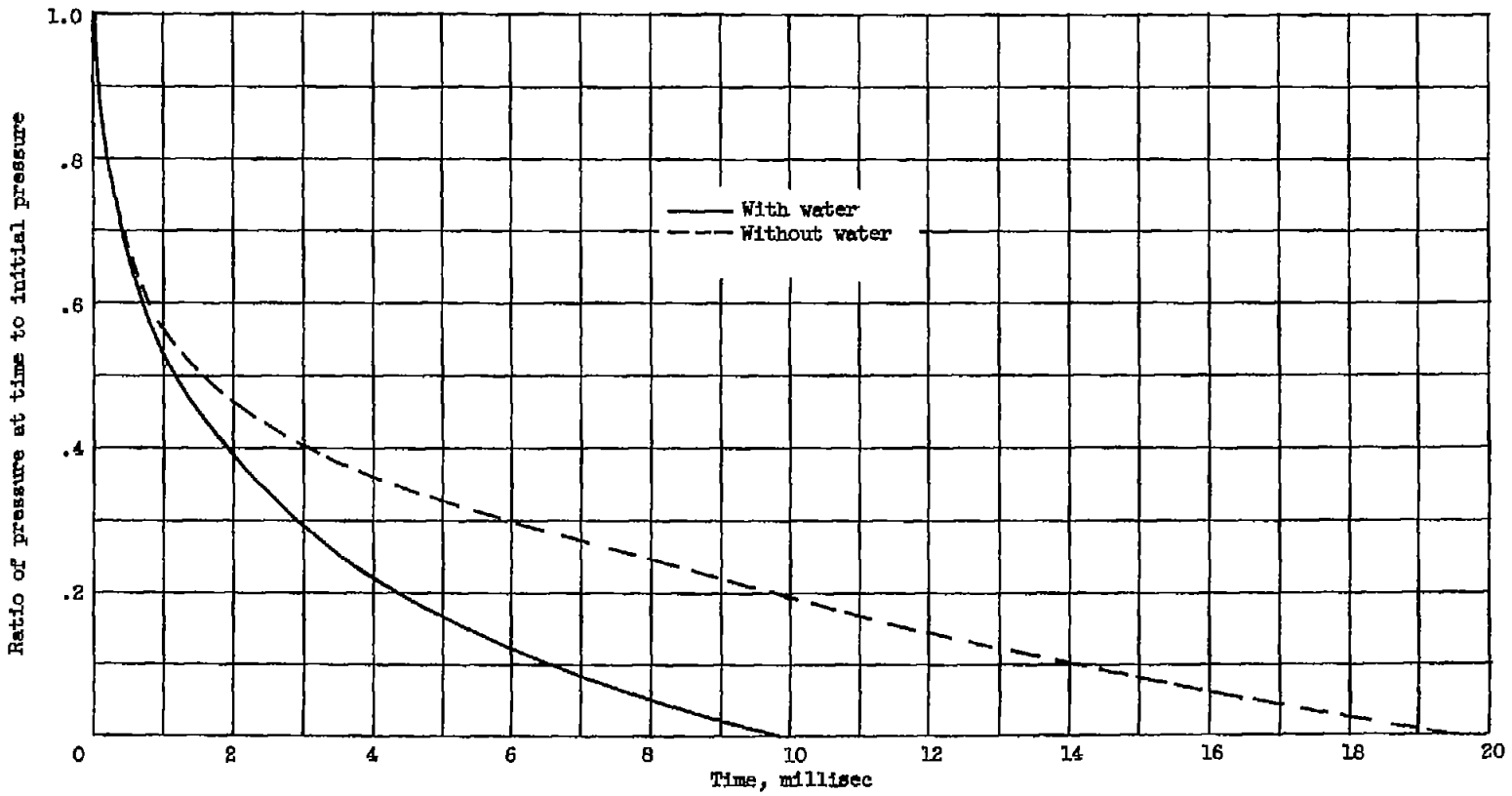

Figure 14. - Pressure-time history for hydrogen-oxygen detonation.

NACA - Langley Field, Va.