10300
NACA TN 3965

TECH LIBRARY KAFB, NM
0067011

NATIONAL ADVISORY COMMITTEE FOR AERONAUTICS

TECHNICAL NOTE 3965

MEASUREMENTS OF THE NONLINEAR VARIATION WITH TEMPERATURE OF HEAT-TRANSFER RATE FROM HOT WIRES IN TRANSONIC AND SUPERSONIC FLOW

By Warren Winovich and Howard A. Stine

Ames Aeronautical Laboratory
Moffett Field, Calif.

Washington
April 1957

AFMDC
TECHNICAL LIBRARY
AFL 2811

TECH LIBRARY KAFB, NM

0067011

1C

NATIONAL ADVISORY COMMITTEE FOR AERONAUTICS

TECHNICAL NOTE 3965

MEASUREMENTS OF THE NONLINEAR VARIATION WITH TEMPERATURE OF HEAT-TRANSFER RATE FROM HOT WIRES IN TRANSONIC AND SUPERSONIC FLOW

By Warren Winovich and Howard A. Stine

SUMMARY

Equilibrium temperatures and heat-transfer rates for 0.00015- and 0.00030-inch diameter tungsten wires normal to the flow were determined throughout the Mach number range 0.5 to 2.5 with Reynolds number varying between the limits 18 and 144. This test range corresponds to hot-wire operation with Knudsen number varying from 0.12 to 0.005 where Knudsen numbers of 0.01 and 2 define the limits of continuum and fully established free-molecule flow, respectively.

For the range of variables of the present tests, equilibrium temperature of the hot wire is characterized by constant recovery factor for subsonic Mach numbers but constant equilibrium to total temperature ratio for supersonic Mach numbers. At constant overheat ratio, the Nusselt number was found to depend on both the Mach number and Reynolds number. In the transonic Mach number range, the Nusselt number was found to depend primarily on the Knudsen number. Measurements to appraise the effects of operating at variable temperature potential revealed that the degree of nonlinearity between heat-transfer rate and wire temperature potential is determined jointly by the Reynolds number and Mach number. For a given Reynolds number, the effect is most pronounced at Mach number 1.

INTRODUCTION

The measurement of fluctuating and mean flow properties in high-speed gases by hot-wire techniques requires a knowledge of all quantities affecting the heat-transfer rate. For constant wire temperature, early investigators established the Reynolds and Prandtl numbers as governing parameters at very low subsonic speeds. Similar measurements of the heat-transfer rate at transonic and supersonic speeds (e.g., refs. 1, 2, 3, and 4) have established the reduction in the heat-transfer rate due to compressibility effects. Although theoretical analyses of heat-transfer rates in compressible flows indicate certain trends found by tests, the magnitudes are, unfortunately, not in agreement. Without complete theoretical knowledge, it has therefore been necessary to establish empirical correlations of the

heat-transfer rate for hot wires in order to interpret the hot-wire outputs. For successful application, such correlations or wire calibrations must include all pertinent variables.

Low subsonic Mach number tests at various wire temperatures (e.g. refs. 5 and 6) established that a nonlinear relation exists between the heat-transfer rate and the temperature potential of the wire. Hilpert (ref. 6), for example, found a 6-percent departure from a linear variation in the heat-transfer rate for wire temperatures of 1000° F compared to the rate found for a wire temperature of 200° F. At high speeds, however, an opposite nonlinear trend has been observed. Kovasznay and Tormarck (ref. 1), for example, obtained measurements in the range of Mach numbers from 1.1 to 2.0 which indicate a departure of minus 55 percent under the same wire temperature conditions as Hilpert's. Because relatively few calibrations have been made in the Mach number region lying between the low subsonic tests of Hilpert ($M \approx 0.06$) and the supersonic tests of Kovasznay ($M < 2$), and because the available calibrations (refs. 1, 2, and 3) exhibit discrepancies between one another that cannot be accounted for by known experimental error, the effect of Mach number on the temperature nonlinearity is not well defined. Furthermore, because a hot-wire survey in, for example, a high-speed boundary layer encounters a wide variation in Mach number, it is evident that there exists a need for data showing the effect of Mach number on nonlinear heat-transfer trends.

The principal purpose of this report is to present an analysis of heat-loss data from hot wires operating throughout the Mach numbers 0.3 to 2.5 with the intent to reveal the effect of Mach number on the temperature nonlinearities. A portion of the data which are analyzed has been published previously (ref. 7). These data and additional data gathered subsequently form the basis for this study. The data are analyzed in three stages. The effect of Mach number and Reynolds number is determined upon (1) the equilibrium wire temperature, (2) heat-transfer rate at constant temperature potential, and (3) temperature loading nonlinearities. This division constitutes the plan of the report.

SYMBOLS

$\bar{a}_w$	mean overheat ratio, $\frac{R_w - R_e}{R_e}$ dimensionless
c	free-stream speed of sound, ft/sec
D	wire diameter, ft
c_p	specific heat at constant pressure, Btu/lb °F
h	convection heat-transfer coefficient, Btu/sec ft^2 °F
g	gravitational force per unit mass, 32.2 ft/sec^2

I wire current, amp

J thermal equivalent of electrical energy, 9.48×10^{-4} Btu/w sec

K thermal conductivity of wire material, Btu/sec ft $^{\circ}F$

k thermal conductivity of gas, Btu/sec ft $^{\circ}F$

l wire length, ft

M Mach number, $\frac{V}{c}$, dimensionless

N_K Knudsen number, $\sqrt{\frac{\gamma\pi}{2}}\frac{M}{N_R}$

N_N Nusselt number, $\frac{hD}{k_e}$

N_P Prandtl number, $\frac{g\mu c_p}{k}$

N_R Reynolds number, $\frac{\rho VD}{\mu}$

$\bar{p}$ overheat ratio function, $\frac{\bar{a}_w}{1 + \bar{a}_w}$

r_c recovery factor

R wire resistance, ohms

S dimensionless grouping that characterizes the end-loss correction, $\frac{D}{l}\sqrt{\frac{K_e}{k_e}}\sqrt{\frac{1 + \bar{a}_w}{N_N}}$

t temperature potential, $T_w - T_e$, $^{\circ}F$

T absolute temperature, $^{\circ}R$

V free-stream velocity, ft/sec

z end-loss correction, $\frac{\text{convection heat transfer}}{\text{electrical input}}$

α,β first- and second-order coefficients of resistivity, $^{\circ}F^{-1}$ and $^{\circ}F^{-2}$, respectively, $R = R_f\ (1 + \alpha_f t + \beta_f t^2)$

γ ratio of specific heats, 1.40 for air

κ approximate rate of increase of end-loss correction with overheat ratio over the range $0 < \bar{a}_w < 1$, $\left(\frac{\partial Z}{\partial \bar{a}_w}\right)_{\bar{a}_w = 0.50}$ evaluated under the assumption that $\beta = \xi = 0$

ξ nonlinear overheat ratio coefficient, $h = h_o(1 - \xi\bar{a}_w)$

μ free-stream viscosity, lb sec/ft^2

ρ free-stream density, slugs/cu ft

σ temperature coefficient of wire thermal conductivity, $^{\circ}F^{-1}$, $K = K_e(1 - \sigma t)$

Subscripts

calc calculated value

e equilibrium

f value at 492° R

o zero overheat ratio

r reference condition

t stagnation state

w wire

Superscripts

$(\overline{\ })$ spanwise average value

$(\ )^*$ limiting case for indefinitely long wire

EXPERIMENTAL EQUIPMENT

Wind Tunnels

The data were collected in the Ames 2- by 2-foot transonic wind tunnel and the Ames 1- by 3-foot supersonic wind tunnel no. 1. These facilities are closed-circuit, continuous-operation, variable-pressure types, and use dry, filtered air as the working fluid. The 2- by 2-foot wind tunnel was operated through the Mach number range 0.5 to 1.4 at nominal values of Reynolds number per foot of 2.25, 4.0, and 5.75 million. Data were obtained from the 1- by 3-foot wind tunnel in the Mach number range from 1.4 to 2.5 and subsonic measurements between Mach numbers 0.4 and 0.8 were also made in this facility. The Reynolds number range was substantially the same as that covered in the 2- by 2-foot wind tunnel. The hot wires were located on the center lines of the wind tunnels at a fixed longitudinal position in each of the test sections.

Hot-Wire Equipment

Heat-loss data were obtained using a constant current hot-wire anemometer developed by the Ames Wind Tunnel Instrument Research Branch. A view of the equipment is shown in figure 1 along with a basic diagram of the direct-current measuring circuit. Direct current for heating the wire is obtained from a full-wave rectifier. The rectifier output is smoothed by choke filters and is regulated by a series voltage regulator. As shown in figure 1(b), wire resistance is measured by a conventional Wheatstone bridge circuit with the wire forming one leg. Lead resistance is determined prior to testing and is set on the lead resistance trimmer so that the resistance decade measures only the wire resistance. The electronic null indicator is essentially a d-c amplifier and galvanometer. Wire current is obtained by measuring the voltage drop across the 10-ohm resistor with a potentiometer that is incorporated in the instrument. The precision of a single measurement is characterized by a relative error of about 1/4 percent.

Hot-Wire Probe

A typical hot-wire probe is shown in figure 2. The probe consists of two conical-tipped, high-carbon steel needles imbedded in a lucite cylinder. Principal dimensions can be obtained from the figure. Tungsten wires with nominal diameters either of 0.00015 or of 0.00030 inch are spot-welded to the cone tips. Resistance-temperature characteristics of the tungsten wires used in the present tests are given in table I. The methods used to determine these properties will be described in a later section.

The probes were sting-mounted during the tests in the 2- by 2-foot wind tunnel; the 20° wedge surfaces of the probe were mounted flush with the surfaces of a 20° symmetrical wedge spanning the test section during the tests in the 1- by 3-foot wind tunnel.

TEST PROCEDURE

For each fixed flow condition of Mach number and Reynolds number, the following three types of tests were carried out:

1. Determination of the adiabatic resistance of the wire in order to find the equilibrium temperature.

2. Measurement of the total heat-transfer rate from the hot wire at an arbitrary constant overheat ratio.

3. Measurement of the total heat-transfer rate at various additional overheat ratios to determine the nonlinearity between the heat-transfer rate and the wire temperature potential.

The flow conditions for these measurements were systematically changed by holding the free-stream Reynolds number constant while the Mach number was varied from 0.5 to 2.5. Operation at Reynolds numbers per foot from 2.25 to 5.75 million resulted in Reynolds numbers based on wire diameter from 18 to 144. The techniques employed for each of the three phases of hot-wire measurement at a given flow condition are discussed in the following paragraphs.

Equilibrium Temperature

Equilibrium temperatures were obtained by employing the tungsten wire as a resistance thermometer. Prior to each constant Reynolds number run, the adiabatic wire resistance was determined in an essentially incompressible flow ($M = 0.07$) at atmospheric pressure. This measurement at the reference condition was repeated before each test so that equilibrium temperatures could be found from the measured changes in the "cold" resistances. The cold-wire resistance was determined by extrapolation of resistances obtained with very low currents flowing through the wire. The small currents utilized resulted in resistance corrections to the zero current value that were of the order of 1 percent.

Heat-Transfer Rate at Constant Overheat Ratio

After obtaining the adiabatic resistance, the wire was heated with an electric current until the mean resistance was increased by 95 percent. This corresponds to a mean overheat ratio of 0.95. Resistance and current measurements then gave the total power input to the wire. The inputs were corrected for heat conduction out of the ends of the wire by the method of reference 1. A value of 0.95 for overheat ratio was chosen as an upper limit in order to avoid exceeding a mean wire temperature potential of 400° F, corresponding to the temperature below which oxidation of tungsten wire is not serious (ref. 2). Wire resistance at a specified reference temperature gradually increased due to slow oxidation and to other factors such as impacts with dust particles which may have caused a permanent set, and property variations due to the annealing associated with the repeated heatings. An assessment of the wire stability was obtained by noting the drift in the cold resistance measurements made at the reference condition. These checks, made in the 2- by 2-foot transonic wind tunnel only, indicated that a maximum drift of 1 percent could occur over a 12-hour continuous-run period.

Heat-Transfer Rate at Various Overheat Ratios

Indirect measurements of the nonlinearity that exists between the heat-transfer rate and the mean temperature potential were obtained by operating the wire at various overheat ratios from 0.25 to 0.95. These measurements were made at Reynolds numbers based on wire diameter of 26, 52, and 100. The technique of using current and overheat ratio measurements to obtain measures of a nonlinear overheat ratio coefficient is subsequently developed in the section on data reduction.

DATA REDUCTION

Equilibrium Wire Temperature

Equilibrium wire temperatures were calculated from the approximate linear relation that exists over small temperature intervals between wire resistance and temperature:

$$R_e = R_r \left[1 + \alpha_r(T_e - T_r)\right] \tag{1a}$$

from which

$$T_e = T_r + \frac{R_e - R_r}{R_r \alpha_r} \tag{1b}$$

The reference temperature of equation (1b) corresponded to the stagnation temperature that existed when the tunnel was operated at $M = 0.07$ and atmospheric pressure.

Equilibrium temperature data for the hot wire were then reduced to the usual equilibrium to total temperature ratio T_e/T_t. The recovery factor was then computed from the measurements using the equation:

$$r_c = \frac{T_e}{T_t} - \frac{1 - (T_e/T_t)}{\frac{\gamma - 1}{2} M^2} \tag{2}$$

The recovery factor defined by the equilibrium temperature is useful for making comparisons between the hot-wire phenomenon and theoretical and experimental results for continuum flow.

Heat-Transfer Rates

With the application of an end-loss correction, the power input to the hot wire equals the heat transferred to the stream by forced convection:

$$zI^2 \overline{R}_w J = h\pi D l \overline{t} \tag{3}$$

when radiation effects are neglected. Equation (3) forms the basis of the heat-transfer-rate determination because when the end-loss correction z, the mean temperature potential $\overline{t}$, and the mean power input $I^2\overline{R}_w$ are known, the dimensionless heat-transfer coefficient, or Nusselt number, can be formed:

$$N_N = \frac{hD}{k_e} = \frac{zI^2\overline{R}_w J}{\pi l k_e \overline{t}} \tag{4}$$

Two factors on the right-hand side of equation (4) are not readily measurable and must be calculated. They are the end-loss correction z and the mean temperature potential $\overline{t}$. Herein lies a fundamental difficulty in the use of the hot wire. These corrections (a) can, if inaccurate, introduce an apparent nonlinearity in the variation of heat-transfer coefficient with overheat ratio, and (b) are in themselves nonlinear functions of overheat ratio, as will be shown later.

The end-loss correction z is the same as that described in reference 1. The derivation of the end-loss correction of reference 1 incorporates the assumptions that the wire has no second-order temperature coefficient of resistivity, that the heat-transfer rate is linear with temperature potential, and that the wire thermal conductivity is constant. Generally, these assumptions are not met in practice and departure from these assumptions can conceivably lead to an apparent nonlinearity between heat-transfer coefficient and temperature potential. An assessment of their combined effects upon the end-loss correction has been made and is shown in figure 3. Figure 3 shows end-loss correction z as a function of overheat ratio for different values of the end-loss parameter S_o. The parameters β/α^2 and ξ, respectively, represent departures from a "linear" wire and from a flow in which the heat loss is proportional to the temperature potential. For a given wire and fixed free-stream conditions, the quantity S_o is a function of the Nusselt number only

$(S_o = (D/l)(\sqrt{K_e/k_e})(1/\sqrt{N_{N_o}}))$. When the Nusselt number at zero overheat ratio is regarded as being determined by the free-stream conditions only, the curves at various values of S_o in figure 3 can be interpreted as end-loss variation with overheat ratio under fixed flow conditions. In general, the small values of S_o are associated with high Reynolds number, low Mach number flows. The analysis for end-loss correction z shows that any temperature nonlinearities associated with the resistivity of the wire and the heat-transfer rate affect the value of z most for large values of S_o. Therefore, the end-loss correction was calculated (by mechanical integration of the resulting nonlinear differential equation) for two nonlinear cases using a relatively large value of S_o (0.15). It should be noted that S_o is usually less than 0.15 for practical hot-wire applications. A single calculation was made to determine the effect of variation of wire thermal conductivity along the length of the wire upon the end-loss correction. The result of this calculation (fig. 3) is essentially the same as the result for $\beta/\alpha^2 = \xi = 0.10$. From this it is concluded that, although the temperature distribution is changed due to the additional nonlinearity introduced by the wire thermal conductivity variation, the end loss is unaffected. Qualitatively, this result is expected because the end loss is primarily dependent on the slope of the temperature distribution at the ends of the wire. Near the ends of the wire the temperature distribution must of necessity approach the linear one because the ends of the wire are at equilibrium temperature. Inspection of figure 3 shows that the linear correction yields values for z that differ at most by 1/2 percent from the nonlinear solutions which represent closer approximations to actual cases. For end-loss factors (z) above 0.85, the linear approximation thus appears adequate up to overheat ratios of 1.

An additional useful characteristic of the end-loss correction shown in figure 3 is that for overheat ratios less than 1 the variation of z with overheat ratio for fixed free-stream conditions is approximately linear:

$$z = z_o(1 + \kappa\bar{a}_w) \tag{5}$$

The slope over the overheat ratio range from 0 to 1 can be approximated by $\kappa = \partial z/\partial a_w$ evaluated at an overheat ratio of 0.50 for the linear case. A good approximation for the factor κ is the result:

$$\kappa \approx \frac{1}{4} S_o \tag{6}$$

In equation (4), the other quantity which can lead to an apparent temperature nonlinearity if inaccurately determined is the mean temperature potential, $\bar{t}$. The mean temperature potential is determined from the mean wire resistance and its temperature coefficients of resistivity. Over a wide temperature range, the resistance and temperature potential for a wire of infinite length are well represented by a second-degree equation:

$$R_w = R_e(1 + \alpha_e t + \beta_e t^2) \tag{7}$$

where α_e and β_e are the first- and second-order coefficients of resistivity evaluated at the equilibrium temperature. With uniform flow conditions existing along the wire span and with the ends assumed at equilibrium temperature, the mean temperature potential has been calculated approximately and is given in terms of the overheat ratio (Appendix A) as:

$$\bar{t} = \frac{\bar{a}_w}{\alpha_e}\left(1 + \frac{\beta_e}{\alpha_e^2}\bar{a}_w\right)^{-1} \tag{8}$$

The Nusselt number calculations (eq. (4)) were carried out from the power measurements where the end-loss corrections were found from equation (5) and the mean wire temperatures were given by equation (8).

Dependence of Heat-Transfer Rate on Overheat Ratio

One can evaluate the variation of the heat-transfer rate with overheat ratio, or temperature potential, by defining the convection heat-transfer coefficient as follows:

$$h = h_o(1 - \xi\bar{a}_w) \tag{9}$$

Then, for the general case in which the wire is operated at various overheat ratios under fixed flow conditions, equation (3) can be written

$$\frac{h_o \pi D l}{z_o R_e \alpha_e J}\left(\frac{\overline{p}}{I^2}\right) = \frac{(1 + \kappa\overline{a}_w)[1 + (\beta_e/\alpha_e^2)\overline{a}_w]}{1 - \xi\overline{a}_w} \tag{10}$$

The group of constants before the term $\overline{p}/I^2$ represents the limit $I^2/\overline{p}$ for zero overheat ratio. It is anticipated that κ, β_e/α_e^2, and ξ will be small compared to unity. For this case and for overheat ratios below 1, the right-hand side of equation (10) can be approximated more simply by performing the indicated operations and neglecting cross products:

$$\frac{\overline{p}/I^2}{(\overline{p}/I^2)_o} \approx 1 + \left(\kappa + \frac{\beta_e}{\alpha_e^2} + \xi\right)\overline{a}_w \tag{11}$$

For typical values of κ, β_e/α_e^2, and ξ subsequently found, the approximate form of equation (11) agrees to within 1 percent with the exact expression of equation (10). Equation (11), therefore, supplies a simple means for indirectly measuring the nonlinear coefficient ξ in terms of current and overheat ratio for fixed flow conditions. The value of ξ is determined from the slope of the straight-line variation predicted by equation (11) when the values of κ and β_e/α_e^2 are known.

Accuracy of Measurements

Flow measurements.- Mach number in the 2- by 2-foot wind tunnel was obtained from a Mach meter which was calibrated to ±0.005 of indicated Mach number. Total temperature was measured on the center line of the tunnel in the settling chamber with an iron-constantan thermocouple to an accuracy of $\pm 1/4^{\circ}$ F. Total pressure was measured in the settling chamber by a mercury manometer with an uncertainty in the reading of ±0.05 inch of mercury. These uncertainties associated with the flow measurements also apply to corresponding data obtained from the 1- by 3-foot wind tunnel.

Heat-transfer measurements.- The power dissipated by the hot wire was measured with an uncertainty of 3/4 percent. In forming the dimensionless Nusselt number from the power measurements, it is necessary to estimate the mean wire temperature from the resistance measurement. This requires that the temperature coefficients of resistivity for the wires be known. The first-order temperature coefficient, α, for the wires was determined from resistance measurements made in a very low-speed flow for which the air temperature varied over the range 60° to 110° F. An upper limit of the uncertainty of the first-order temperature coefficient of resistivity by this method is about 5 percent. The second-order temperature coefficient of resistivity was not directly determined for any of the test wires. For wire No. 2, however, the quotient β/α^2 was measured by operating the wire in a high vacuum to obtain measures of the quantity $R\alpha/l$ as a function of overheat ratio. The value of the straight-line

slope obtained from this measurement can be shown to be the quantity β/α^2 (Appendix B). For wire No. 2, the value 0.137 was obtained from the vacuum measurements and agrees well with the value 0.138 found for a 2-inch sample from the same spool by independent resistance-temperature measurements (sample sealed in nitrogen-filled pyrex tube and heated in electric furnace, see table I). It was assumed that β/α^2 for the 2-inch samples was representative for all of the test wires from the same spool.

To summarize the uncertainties associated with the quantities reported here, an error analysis has been made in which all uncertainties associated with the primary measurements are assumed to be additive. The result is:

Quantity	Uncertainty, percent
N_R	6
T_e	1/2
T_t	1/10
M	1
$\overline{T}_w - T_e$	5
N_N	8
ξ	20

RESULTS AND DISCUSSION

The data discussed in the following paragraphs have been analyzed on the basis of a Reynolds number defined by the free-stream condition and by a Nusselt number based on equilibrium temperature. In order to facilitate change to other bases, the data have been summarized in table II.

Equilibrium Temperature Tests

In the unheated state, the wire assumes a temperature between the free-stream and the total temperature of the stream. This temperature is called the wire equilibrium temperature and is analogous to the recovery temperature for boundary-layer flows. A recovery factor can be calculated for each measurement of equilibrium temperature with the wire by using equation (2). In what follows, the equilibrium temperature and the corresponding recovery factor are discussed in conjunction. Attention is directed first to measurements in the subsonic range.

The characteristics of equilibrium temperature and the corresponding recovery factor are shown in figure 4(a). Equilibrium to total temperature

ratio, hereafter called simply equilibrium temperature ratio, for two Reynolds numbers is plotted as a function of the Mach number. The dashed curve represents the trend of the corresponding recovery factors. No significant variation in the equilibrium temperature ratio with Reynolds number was found for the Reynolds numbers of the present tests. Thus the Mach number determines the equilibrium temperature ratio for this Reynolds number range. The variation of equilibrium temperature ratio with Mach number changes abruptly at a Mach number slightly below 1 (about $M = 0.9$). In the subsonic range below a Mach number of 0.9, the equilibrium temperature falls below the recovery temperature for the laminar boundary layer, which is characterized by constant recovery factor of $\sqrt{N_P} = 0.836$. However, the trend of the measurements suggests that the recovery factor for the wire is itself constant in this region. Up to $M = 0.9$, the recovery factor was found to be within 2-1/2 percent of the value 0.78.

For Mach numbers greater than 0.9, the equilibrium wire temperature ratio is indicated to be constant at a value of approximately 0.97. The two points at a Mach number of 3 are taken from reference 8. The corresponding calculated recovery factor increases with Mach number and approaches the asymptotic value of 0.97. This is due to the relation that exists between recovery factor and the equilibrium temperature ratio (eq. (2)).

The equilibrium temperature data from two constant Reynolds number runs of the present test are compared with the results of Stalder, Goodwin, and Creager (ref. 4) in figure 4(b). The data are plotted against the Knudsen number. The dashed horizontal line at $r_c = 0.97$ corresponds to the limit in recovery factor imposed by virtue of a constant supersonic value for equilibrium temperature ratio. The departure from the subsonic value ($r_c = 0.78$) occurs near Mach number 1. The actual departure point depends upon the Reynolds number. For increasing Reynolds numbers this point moves to lower values of Knudsen number. The measured points from the present test are for Reynolds numbers 28 and 56. For Mach numbers above 1.9 (solid points) the measurements of the present test agree well with those data of reference 4 which were obtained at Mach numbers between 1.9 and 3.2 and which lie in the same Knudsen number range. For high Mach numbers ($M > 2$, say) in any series of constant Reynolds number runs, the asymptotic approaches to the limit $r_c = 0.97$ form a locus of points which gives, essentially, independence of recovery factor with Reynolds number in this range of Knudsen number. This is the result noted in reference 4. At Knudsen numbers greater than 0.2, however, the recovery factor measurements of reference 4 indicate that free-molecule-flow effects cause the recovery factor to increase.

Heat-Transfer Tests

In the presentation of heat-loss data there exists the problem of selecting (1) the control parameters and (2) the basis for evaluation of the state properties that determine the parameters. As noted previously,

the heat loss from hot wires is a function of the Prandtl, Reynolds, and Mach number as well as the operating temperature of the wire. The Prandtl number for air is essentially constant over wide temperature ranges; and for this reason, it has not been considered as a parameter for presentation of these data. Various bases for computation of the Reynolds number have been suggested (refs. 1, 2, 3, and 4). Generally, proposed bases for defining the state functions are chosen in such a way as to reduce Mach number and temperature loading effects upon the heat-transfer rate. The Reynolds number basis chosen in this report is the same state used to define the Mach number - namely, the free-stream state. The Nusselt number, on the other hand, is based on thermal conductivity evaluated at equilibrium wire temperature. These choices were made because it simplifies the present study of temperature loading effects on the heat-transfer rate.

Constant overheat ratio.- The variation of Nusselt number with Mach number is shown in figure 5 for various values of free-stream Reynolds number. The measurements correspond to a constant overheat ratio of 0.95. For this condition the mean temperature potential of the wire above equilibrium temperature is constant and corresponds to approximately 400° F. The dashed portion of the curves extending to low subsonic Mach numbers are extrapolations of the data to the widely used heat-loss correlation for cylinders in crossflow of reference 9 which is for incompressible flow ($M < 0.06$). An abrupt change in the heat-transfer rate occurs at Mach number 1. The heat-transfer rate continues to decrease with increasing Mach number; however, the rate of decrease with Mach number is much more gradual than for subsonic Mach numbers. This behavior is consistent with the well-known fact that the flow over blunt bodies tends to approach a fixed pattern as the free-stream Mach number is increased.

The variation of Nusselt number with Reynolds number is shown in figure 6. At constant Mach number, a linear relation holds between Nusselt number and the square root of the free-stream Reynolds number for the range of the present tests. Also shown in the figure are results from references 4 and 10 (at nearly the same temperature potential) which give Nusselt number as a function of Reynolds number for very low Reynolds numbers in the slip-flow and continuum range, respectively. The gradual decrease in slope of the constant Mach number curves in figure 6 as Mach number is increased are consistent with the results of reference 4. It should be noted that linear extrapolations of the slopes of the present test to Reynolds numbers less than 16 are unwarranted because of the nonlinear relation between Nusselt number and the square root of Reynolds number which is especially pronounced at higher Mach numbers.

Shown also in figure 6 is the heat-transfer correlation for cylinders in incompressible flow recommended in reference 9 when allowance is made for the temperature dependence of the heat-loss rate.[1] Calibration of a

[1]Equation (4c) of reference 9 is based upon average film temperature. When the correlation is expressed in terms of equilibrium and free-stream state (essentially stagnation state for low Mach numbers), the temperature dependency for an overheat ratio of 1 modifies the constants to the values: $N_N = 0.45 + 0.51\ N_R^{0.52}$.

0.00015-inch wire in a low-speed subsonic channel ($0.02 < M < 0.05$) at a constant overheat ratio of 1 agreed with this curve over the range tested. Measurements made at the reference point ($M = 0.07$) for the transonic tests agreed well both with the low-speed calibration data and the recommended equation of reference 9; thus, the wire reference measurement serves to establish the relative difference between incompressible correlations and the correlations at constant Mach number in the transonic and supersonic range.

The variation of Nusselt number with Reynolds number at constant values of Mach number shown in figure 6 agrees qualitatively with the prediction of the approximate slip-flow theory presented in reference 11. However, the theory of reference 11 predicts a considerably smaller Mach number effect than is shown in figure 6. This is probably due, in part, as stated in reference 12, to the restrictive assumption of reference 11 that the dissipation term in the energy equation is negligible. In view of the qualitative agreement with reference 11, some of the data of the present tests were plotted as a function of the Knudsen number, the dimensionless number that specifies the degree of rarefaction of a gas for a given body. The result for the transonic Mach number range, consisting of the data from the 2- by 2-foot wind tunnel (wires 1 and 2), is shown in figure 7. For the transonic range ($0.5 < M < 1.3$), the data correlate fairly well about a single curve. For the constant Reynolds number runs shown in figure 7, note that the Mach number increases with Knudsen number ($M \sim N_K$ for N_R fixed). Thus, the highest Knudsen number point in a given Reynolds number sequence represents a Mach number of 1.3. A Mach number effect can be detected; however, the effect is small and the gross correlation is the significant one. The Mach number effect can be reduced by incorporation of the Prandtl number based on free-stream temperature (that is, using $M/N_R N_P$ as correlating parameter). The significance of the correlation in figure 7 is that in the transonic range the hot wire is sensitive primarily to changes in density since Knudsen number is inversely proportional to the density. The insensitivity to velocity change at Mach numbers near 1 was noted in reference 3. For Mach numbers outside the range $0.5 < M < 1.3$, the correlation against Knudsen number does not apply.

Variable overheat ratio.- At constant overheat ratio, the previous results have shown that the Nusselt number can be uniquely defined in terms of the Mach number and the Reynolds number. However, as indicated previously, Nusselt number is not independent of wire temperature as characterized by the overheat ratio. Therefore, a series of tests at various overheat ratios were analyzed to determine the nonlinear heat-transfer-rate effects. Heat-transfer data for this analysis were obtained at a number of overheat ratios in a series of flows having fixed free-stream Reynolds number and Mach number.

Figure 8 shows the nonlinear overheat ratio coefficient as a function of Mach number at constant Reynolds number. The nonlinear overheat ratio coefficient was found by the method indicated in the discussion of equation (11). Although not many measurements were made at low subsonic Mach

numbers, the indications are that the coefficient does change sign in this speed range - which agrees with the results of references 3 and 6. Hilpert's data indicate a 6-percent increase in the heat-transfer rate for very low Mach numbers and a Reynolds number of 180; and Spangenberg's data exhibit a reversal in the coefficient at particular Mach numbers. As Mach number increases, the coefficient increases, approaching a maximum value as Mach number approaches 1. In terms of the Nusselt number for the $N_R = 28$ condition and an overheat ratio of 1, the value of the nonlinear overheat ratio coefficient causes a decrease in Nusselt number relative to very low overheat ratio values by about 14 percent. For supersonic Mach numbers, the coefficient decreases with increasing Mach number at a gradual rate so that over a considerable range the magnitude changes by small amounts. It should be noted that the measurements of reference 1 give a nonlinear overheat ratio coefficient of 0.16 ± 0.03 in the supersonic range $1.12 < M < 1.84$ but show no systematic variation with Mach number or Reynolds number.

Variable overheat ratio measurements at nominal Reynolds numbers of 52 and 100 were made in the 1- by 3-foot wind tunnel. Also a subsonic check measurement was made at Reynolds number 28 to obtain results corresponding to the measurements made previously in the 2- by 2-foot wind tunnel. These data are also included in figure 8. Results from the two facilities show that for subsonic Mach number, the crossover Mach number increases with increasing Reynolds numbers. Qualitatively, the measurements of reference 3 exhibit this behavior, too, although the apparent crossover Mach numbers are lower. (This is probably due to uncertainties in the magnitude of the first- and second-order temperature coefficients of resistivity, because a small error in these quantities raises or lowers the curves which affects the crossover point considerably.) Trends in the data for supersonic Mach numbers show that the nonlinear overheat ratio coefficient decreases with increasing Reynolds number. No measurements in the supersonic range resulted in negative values for ξ (i.e., Nusselt number increasing with overheat ratio). Above Mach number 2.5, the nonlinear overheat ratio coefficient appears to approach zero as an asymptote.

The nonlinearity of heat loss with temperature cannot be explained by the dependence between thermal conductivity and temperature ($k \sim T$ approximately), because the local heat-transfer coefficient is directly proportional to the thermal conductivity of air. This proportionality should cause the heat-transfer coefficient to increase with wire temperature - if it were the only effect acting. Measurements of the nonlinear overheat ratio coefficient in the transonic range, however, show that, in general, the heat-transfer coefficient decreases with overheat ratio. The foregoing results indicate that a complete theory for heat transfer must account for observed departures from linearity between heat-transfer rate and temperature that are especially important in the transonic Mach number range.

CONCLUSIONS

Results of equilibrium to total temperature and heat-transfer rate measurements for hot wires operating at transonic and supersonic speeds can be summarized by the following conclusions:

1. Up to a Mach number of 0.9, the equilibrium to total temperature ratio is characterized by a constant recovery factor of approximately 0.78.

2. For supersonic Mach numbers, the equilibrium to total temperature ratio maintains a constant value of 0.97 up to a Knudsen number of about 0.15.

3. For constant temperature potential, the Nusselt number is a function of the Reynolds number and Mach number only. In the transonic Mach number range, the dependency on Mach number and Reynolds number is such that the heat-loss characteristic depends primarily on the Knudsen number, indicating that the heat-loss characteristics are dependent primarily on the free-stream density in this range.

4. Measurements of the nonlinear overheat ratio (or temperature potential) coefficient exhibit Reynolds number and Mach number dependencies. For low subsonic Mach number, the nonlinearity causes the Nusselt number to increase with overheat ratio. At a subsonic Mach number (crossover Mach number), the effect changes sign so that Nusselt number decreases with overheat ratio. The crossover Mach number increases with Reynolds number. The maximum nonlinear effect occurs at Mach number 1 for fixed Reynolds number. Increasing Reynolds number decreases the nonlinear effect in the supersonic range.

Ames Aeronautical Laboratory
National Advisory Committee for Aeronautics
Moffett Field, Calif., Feb. 1, 1957

APPENDIX A

MEAN WIRE TEMPERATURE IN TERMS OF OVERHEAT RATIO AND THE FIRST- AND SECOND-ORDER TEMPERATURE COEFFICIENTS OF RESISTIVITY

Wire resistance is defined in terms of the first- and second-order temperature coefficients as

$$R_w = R_e(1 + \alpha_e t + \beta_e t^2) \tag{A1}$$

The temperature distribution along a wire of variable thermal conductivity with nonlinearities in the heat-transfer rate and in the resistance-temperature variation (i.e., $\xi \neq 0$ and $\beta_e \neq 0$) can be approximated by the temperature distribution for the simple linear case:

$$t = t^*\left(1 - \frac{\cosh \frac{2x}{lS'}}{\cosh \frac{1}{S'}}\right) \text{for which } \bar{t} = t^*(1 - S' \tanh 1/S') \tag{A2}$$

where S' represents an altered value of the parameter S to account for nonlinearities. By proper selection of the term S', which is dependent mainly on wire current and overheat ratio, equation (A2) can be made to approximate the nonlinear cases. The following discussion indicates that the selection of S' is not critical. The average resistance of the hot wire is obtained by integrating over the wire length:

$$\bar{R}_w = R_e \frac{2}{l}\int_0^{l/2} \left[1 + \alpha_e t^* \left(1 - \frac{\cosh \frac{2x}{lS'}}{\cosh \frac{1}{S'}}\right) + \beta_e t^{*2} \left(1 - \frac{\cosh \frac{2x}{lS'}}{\cosh \frac{1}{S'}}\right)^2\right] dx \tag{A3}$$

Completion of the indicated integration gives

$$\frac{\bar{R}_w}{R_e} = 1 + \alpha_e t^*\left(1 - S'\tanh \frac{1}{S'}\right) + \beta_e t^{*2}\left[\left(1 - S'\tanh \frac{1}{S'}\right)^2 + \frac{1}{2} S'\left(\tanh \frac{1}{S'} - 2S'\tanh^2 \frac{1}{S'} + \frac{1}{\cosh^2 \frac{1}{S'}}\right)\right] \tag{A4}$$

For hot-wire work, it can be shown that $1/S' > 6$ usually; typical values for S' are of the order 0.10. Under this condition:

$$\left.\begin{aligned} &\tanh \frac{1}{S'} \approx 1 \\ &\frac{1}{S' \cosh^2 \frac{1}{S'}} << 1 \\ &1 - 2S' \approx (\bar{t}/t^*)^2 \end{aligned}\right\} \tag{A5}$$

Use of the previous approximations gives for overheat ratio

$$\left.\begin{aligned} &\bar{a}_w = \frac{\bar{R}_w}{R_e} - 1 = \alpha_e \bar{t} + \beta_e\left(1 - \frac{S'}{2}\right)\bar{t}^2 \\ &\text{or} \\ &\bar{a}_w = \alpha_e\left[1 + \frac{\beta_e}{\alpha_e}\left(1 - \frac{S'}{2}\right)\bar{t}\right]\bar{t} \end{aligned}\right\} \tag{A6}$$

The last equation shows that the first-order temperature coefficient of resistivity is modified by the term in the brackets when the wire operates over wide temperature potentials. In anticipation of the final result, the temperature potential that appears inside the bracket can be replaced by $(\bar{a}_w/\alpha_e)[1 + (\beta_e/\alpha_e^2)\bar{a}_w]$ to obtain

$$\bar{a}_w = \alpha_e\left[1 + \frac{\beta_e}{\alpha_e^2} \frac{1 + \frac{1}{2} S'}{1 + \frac{\beta_e}{\alpha_e^2} \bar{a}_w} \bar{a}_w\right]\bar{t} \tag{A7}$$

The terms $(1 + S'/2)$ and $[1 + (\beta_e/\alpha_e^2)\bar{a}_w]$ tend to cancel each other over the operating range of overheat ratios up to 1 for $\beta_e > 0$, which is the case for tungsten. Thus, equation (A7) shows that the parameter S' plays a minor role in the determination of overheat ratio. Therefore, the temperature potential and overheat ratio are related to good approximation by

$$\bar{a}_w \approx \alpha_e\left(1 + \frac{\beta_e}{\alpha_e^2} \bar{a}_w\right)\bar{t} \tag{A8}$$

APPENDIX B

MEASUREMENT OF β/α^2 BY OPERATING WIRES UNDER HIGH VACUUM

Analysis of the heat loss from a hot wire when the entire input is conducted along the wire length to a heat sink at the end supports gives the mean overheat ratio in terms of wire constants and wire current as

$$\bar{a}_w = \frac{\tan m}{m} - 1 \tag{B1}$$

where

$$m^2 = \left(\frac{R_e \alpha_e}{l} \frac{J}{\pi}\right) \frac{k_e}{K_e} \left(\frac{l}{D}\right)^2 I^2 \tag{B2}$$

Solving equation (B2) for α_e in terms of wire properties and current gives

$$\alpha_e = \left[\frac{\pi}{J} \frac{l}{R_e} \frac{K_e}{k_e} \left(\frac{D}{l}\right)^2\right] \left(\frac{m}{I}\right)^2 \tag{B3}$$

The quantity within the brackets is fixed for a given sink temperature, T_e. The quotient $(m/I)^2$ (eq. (B2)) is determined for each overheat ratio with the aid of equation (B1). Note that, if the second-order temperature coefficient of resistivity were zero, $(m/I)^2$ would be constant. Thus, a variation of the quotient $(m/I)^2$ with overheat ratio produces a measure of the quantity β/α^2. This last statement follows as a consequence of the result shown in Appendix A (eq. (A8)), namely, that the effect of a second-order temperature coefficient is given to good approximation by modification of the first-order term by the quantity $[1 + (\beta/\alpha^2)\bar{a}_w]$. The result was found for a hyperbolic cosine temperature distribution, and also applies for the cosine temperature distribution found for the wire that is heated in a vacuum. Thus, one can write equation (B3) as

$$\alpha_e\left(1 + \frac{\beta}{\alpha^2} \bar{a}_w\right) = \left[\frac{\pi}{J} \frac{l}{R_e} \frac{K_e}{k_e}\left(\frac{D}{l}\right)^2\right]\left(\frac{m}{I}\right)^2 \tag{B4}$$

When equation (B4) is normalized with respect to the value of the quotient $(m/I)^2$ for zero overheat ratio, the result is

$$1 + \frac{\beta}{\alpha^2} \bar{a}_w = \frac{\left(\frac{m}{I}\right)^2}{\left(\frac{m}{I}\right)_o^2} \tag{B5}$$

REFERENCES

1. Kovasznay, L. S. G., and Tormarck, S. I. A.: Heat Loss of Hot Wires in Supersonic Flow. Bumblebee Rep. 127, Johns Hopkins Univ., Dept. of Aeronautics, 1950.

2. Lowell, Herman H.: Design and Applications of Hot-Wire Anemometers for Steady-State Measurements at Transonic and Supersonic Airspeeds. NACA TN 2117, 1950.

3. Spangenberg, W. G.: Heat-Loss Characteristics of Hot-Wire Anemometers at Various Densities in Transonic and Supersonic Flow. NACA TN 3381, 1951.

4. Stalder, Jackson R., Goodwin, Glen, and Creager, Marcus O.: Heat Transfer to Bodies in a High-Speed Rarefied-Gas Stream. NACA Rep. 1093, 1952.

5. King, L. V.: On the Convection of Heat from Small Cylinders in a Stream of Fluid. Phil. Trans. of Roy. Soc. London, ser. A, vol. 214, 1914, pp. 373-432.

6. Hilpert, R.: Heat Transfer from Heated Wires and Cylinders in an Airstream. Forschung auf dem Gebiete des Ingenieurwessen, Berlin, vol. 4, 1933, p. 215.

7. Stine, Howard A.: Investigation of Heat Transfer From Hot Wires in the Transonic Speed Range. Proc. of the Heat Transfer and Fluid Mech. Inst., Univ. of Calif., Berkeley, 1954.

8. Nothwang, George J.: An Evaluation of Four Experimental Methods for Measuring Mean Properties of a Supersonic Turbulent Boundary Layer. NACA TN 3721, 1956.

9. McAdams, William Henry: Heat Transmission. Second ed., McGraw Hill Book Co., 1942.

10. Cole, J., and Roshko, A.: Heat Transfer From Wires at Reynolds Numbers in the Oseen Range. 1954 Heat Transfer and Fluid Mechanics Institute Preprints of Papers, Univ. of Calif., Berkeley, June 30 - July 2, 1954, Calif. Book Co., 1954. (Also available as CIT Pub. 354)

11. Sauer, F. M., and Drake, R. M., Jr.: Forced Convection Heat Transfer from Horizontal Cylinders in a Rarefied Gas. Jour. Aero. Sci., vol. 20, no. 3, Mar. 1953, pp. 175-180, 209.

12. Martino, R. L.: Heat Transfer in Slip Flow. U. T. I. A. rep. no. 35, Inst. of Aerophysics, Univ. of Toronto, Oct. 1955.

TABLE I.- WIRE PROPERTIES

Wire	l/D	D, in.	α_f, $^{\circ}F^{-1}$	β_f, $^{\circ}F^{-2}$	β_f/α_f^2
2-in. sample	---	0.00015	0.00222	4.88×10^{-7}	0.099
2-in. sample	---	.00030	.00209	6.05×10^{-7}	.138
1	716	.00015	.00254	---	---
2	356	.00030	.00261	---	.137
3	340	.00030	.0026	---	---
4	367	.00030	.0026	---	---
5	712	.00015	.00239	---	---

To convert to reference temperature base:

$$\alpha_r \approx \frac{\alpha_f}{1 + \alpha_f(T_r - T_f)}$$

$$\beta_r \approx \frac{\beta_f}{1 + \alpha_f(T_r - T_f)}$$

TABLE II.- TABULATION OF DATA

(a) Heat-loss data at constant overheat ratio

Wire No.	N_R	M	T_t	T_e/T_t	$\bar{\varepsilon}_w$	zI^2R_w	$^1\Delta R/R_r$, percent
1		0.07	527	1	0		0
	18.1	.50	535	.985	.950	0.0966	
	18.6	.70	541	.980		.0842	
	18.6	.90	548	.974		.0690	
	19.6	.95	551	.969		.0652	
	19.1	1.02	552	.966		.0615	
	18.3	1.10	552	.970		.0610	
	19.8	1.20	541	.972		.0610	
	20.1	1.30	544	.973		.0627	
	20.5	1.40	550	.970		.0616	
		.07	534	1	0		1/4
	28.0	.50	536	.991	.950	.125	
	28.6	.70	538	.985		.110	
	28.4	.90	543	.972		.0912	
	27.6	.95	542	.969		.0836	
	28.2	1.00	547	.969		.0822	
	27.8	1.10	551	.970		.0817	
	27.6	1.20	553	.973		.0802	
	27.9	1.30	556	.970		.0786	
	28.0	1.40	561	.969		.0772	
		.07	547	1	0		1/5
	49.9	.50	535	.995	.950	.174	
	50.1	.70	539	.987		.159	
	50.1	.90	548	.982		.141	
	50.8	.95	554	.975		.133	
	50.0	1.00	556	.971		.126	
	50.4	1.10	557	.971		.122	
	50.2	1.20	559	.975		.123	
	49.5	1.30	565	.979		.122	
	49.1	1.40	571	.977		.120	
		.07	538	1	0		1/2
	71.0	.50	537	.998	.950	.204	
	70.0	.70	544	.989		.187	
	70.4	.90	549	.984		.168	
2		.07	535	1	0		0
	56.8	.50	541	.988	.950	.175	
	56.3	.70	545	.983		.162	
	58.2	.90	548	.976		.143	
2	58.7	0.95	549	0.974	0.950	0.139	0
	55.8	1.00	548	.969		.124	
	57.5	1.10	548	.969		.122	
	56.9	1.20	549	.967		.119	
	56.5	1.30	551	.969		.118	
	57.2	1.40	554	.968		.115	
	11.6	.07	540	1		.099	
	98.7	.50	534	.991		.232	
	99.3	.70	541	.989		.214	
	101.2	.90	546	.976		.198	
	99.4	.95	548	.971		.192	
	98.6	1.00	551	.973		.186	
	98.8	1.10	554	.976		.179	
	98.9	1.20	556	.966		.178	
	99.5	1.30	561	.968		.177	
	98.9	1.40	566	.968		.174	
		.07	534	1			1/4
	144	.50	534	.987	.950	.286	
	143	.70	558	.989		.266	
	143	.90	551	.966		.244	
	143	.95	554	.971		.242	
	144	1.00	557	.968		.233	
	143	1.10	560	.963		.231	
	145	1.20	563	.963		.228	
	144	1.30	567	.963		.225	
	143	1.40	576	.950		.224	
		.10	542	1			1
3	26	1.74	527	.968	.950	.061	
	57	1.72	532	.972		.107	
	102	1.74	547	.990		.155	
	24	1.95	523	.977		.053	
	51	1.95	535	.960		.092	
	103	1.95	548	.960		.143	
4	25	2.45	520	.968		.050	
	54	2.45	528	.963		.089	
	61	2.45	533	.970		.093	
	104	2.45	552	.990		.147	

$^1\Delta R = R_r - R_{r,calc}$ where $R_{r,calc} = R_e[1 - \alpha_e(T_e - T_r)]$

TABLE II.- TABULATION OF DATA - Concluded

(b) Nonlinear heat-loss measurements at various overheat ratios

Wire No.	N_R	M	T_t	$\bar{a}_w$	$\bar{P}/I^2$, amp^{-2}	ξ
5	25.1	0.30	519	0.239	121.0	-0.006
				.478	125.0	
				.960	130.0	
	26.6	.50	524	.237	128.0	.020
				.475	132.5	
				.954	140.5	
	26.6	.70	534	.235	140.5	.077
				.471	148.0	
				.945	159.5	
	26.8	.90	545	.232	162.5	.096
				.466	170.5	
				.932	186.0	
	27.0	1.01	550	.201	177.8	.137
				.403	187.0	
				.923	209.0	
	26.4	1.10	553	.228	179.5	.129
				.456	191.8	
				.916	209.0	
	26.1	1.29	559	.225	188.5	.111
				.452	198.2	
				.906	217.0	
3	28.0	.60	538	.250	96.0	.033
				.500	99.0	
				.750	103.0	
	50.0	.80	557	.250	73.0	-.008
				.500	74.5	
				.750	76.8	
	50.5	1.35	550	.250	98.5	.087
				.500	103	
				.750	107	
				1.000	112	
4	55.7	1.77	532	.250	23.5	.082
				.500	24.9	
				.750	26.3	
	56.2	2.03	534	.250	25.6	.052
				.500	27.2	
				.750	28.5	
				.980	29.5	
	56	2.50	533	.250	30.0	.025
				.500	31.1	
				.750	32.7	
				.990	34.1	
	100	1.39	548	.250	14.9	.023
				.500	15.7	
				.750	16.2	
	101	1.89	548	.250	18.7	.019
				.500	19.5	
				.750	20.0	
				1.000	21.2	
	100	2.50	551	.250	21.0	.003
				.500	21.7	
				.750	22.7	
				1.000	23.6	

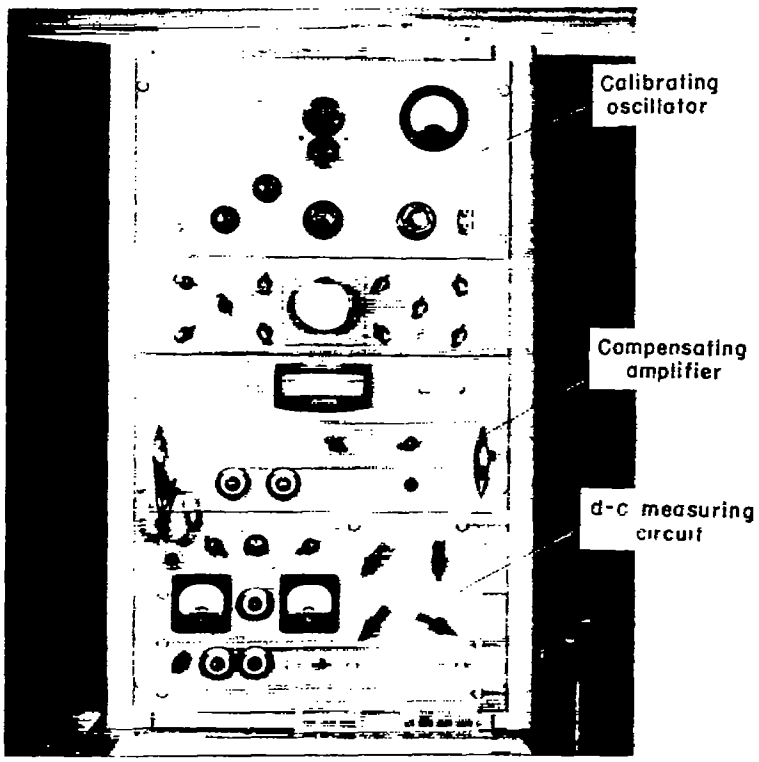

(a) Front view of panel.

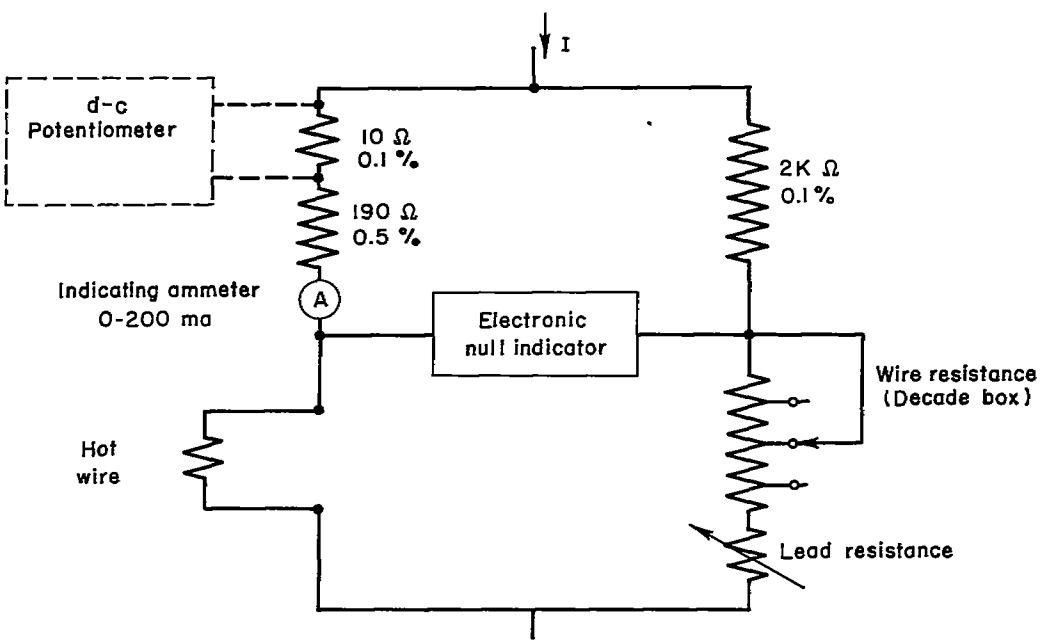

(b) Basic d-c bridge circuit.

Figure 1.- Ames hot-wire anemometer.

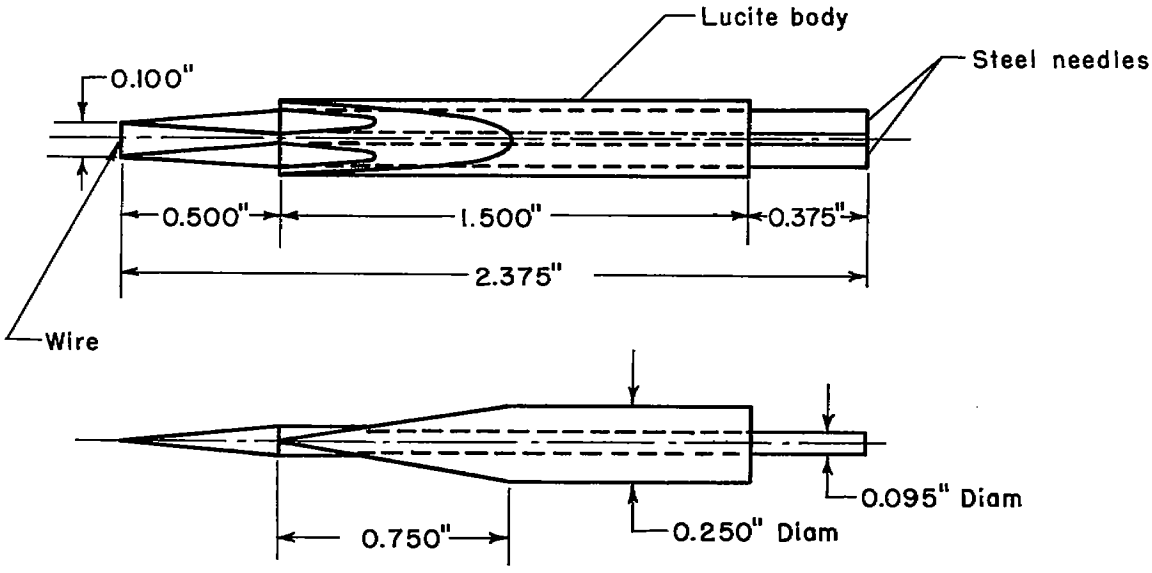

Figure 2.- Typical hot-wire probe.

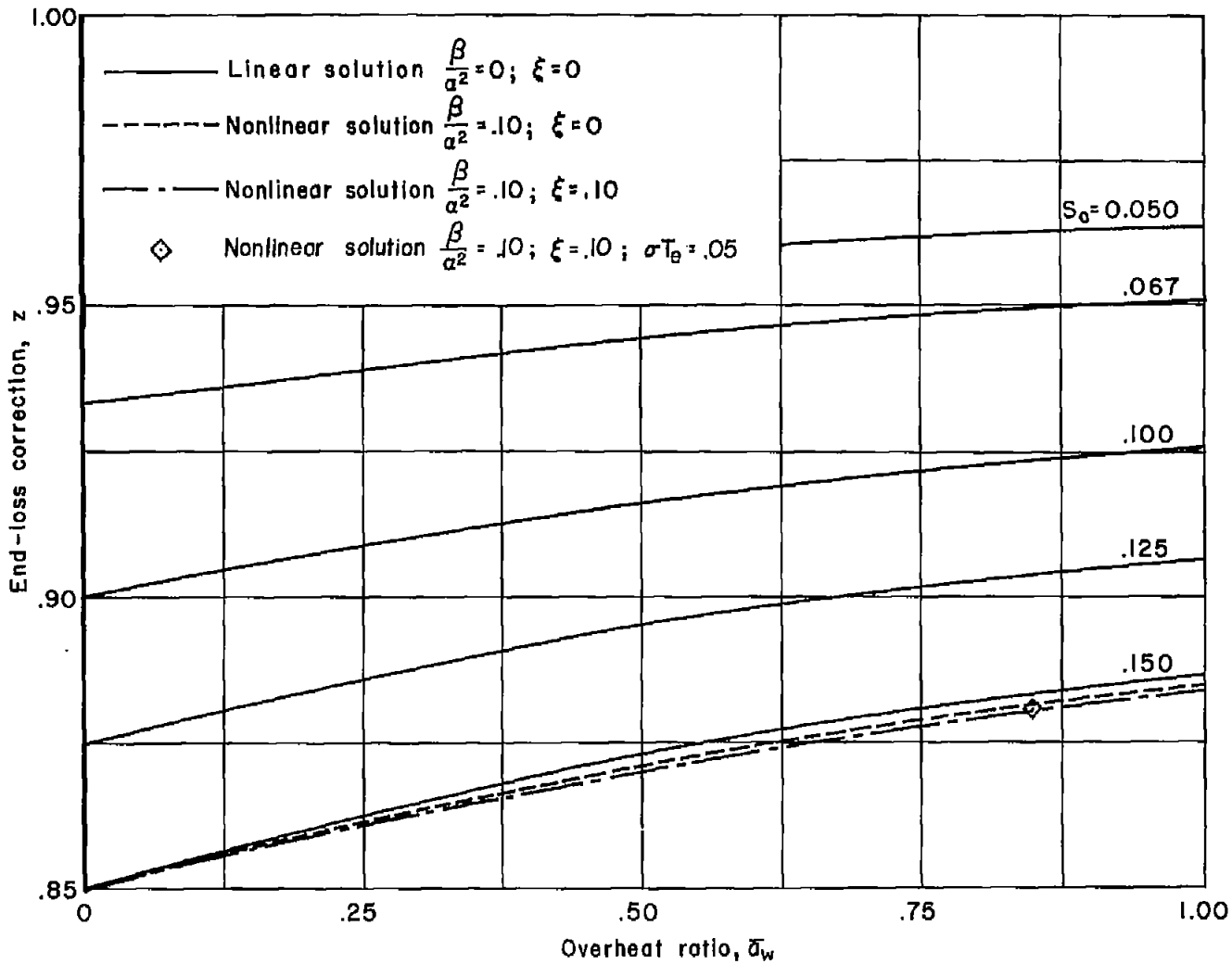

Figure 3.- End-loss correction for hot wires as a function of overheat ratio for various flow conditions.

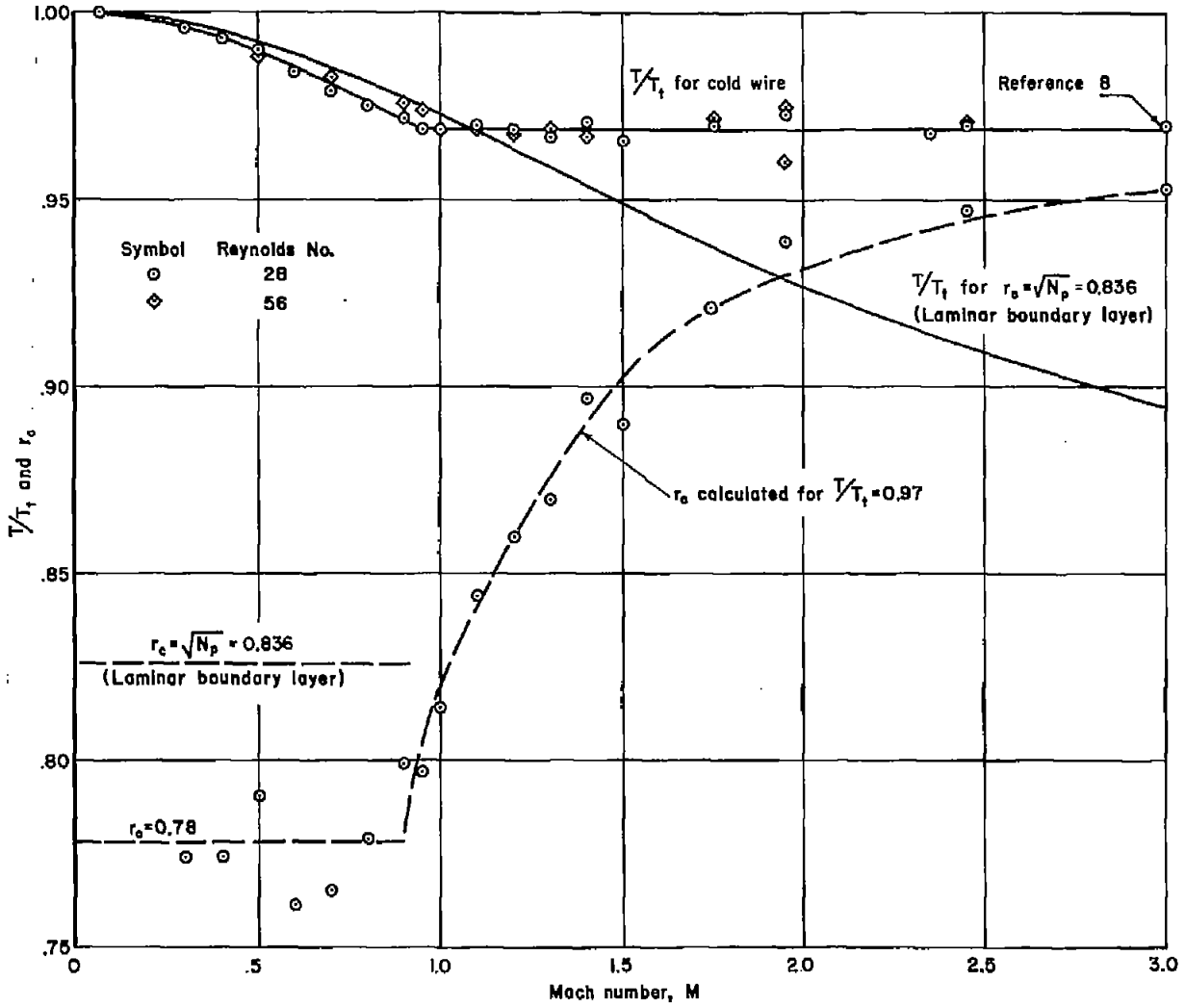

(a) Variation of equilibrium to total temperature ratio with Mach number.

Figure 4.- Characteristic behavior of the unheated wire for subsonic and supersonic Mach numbers.

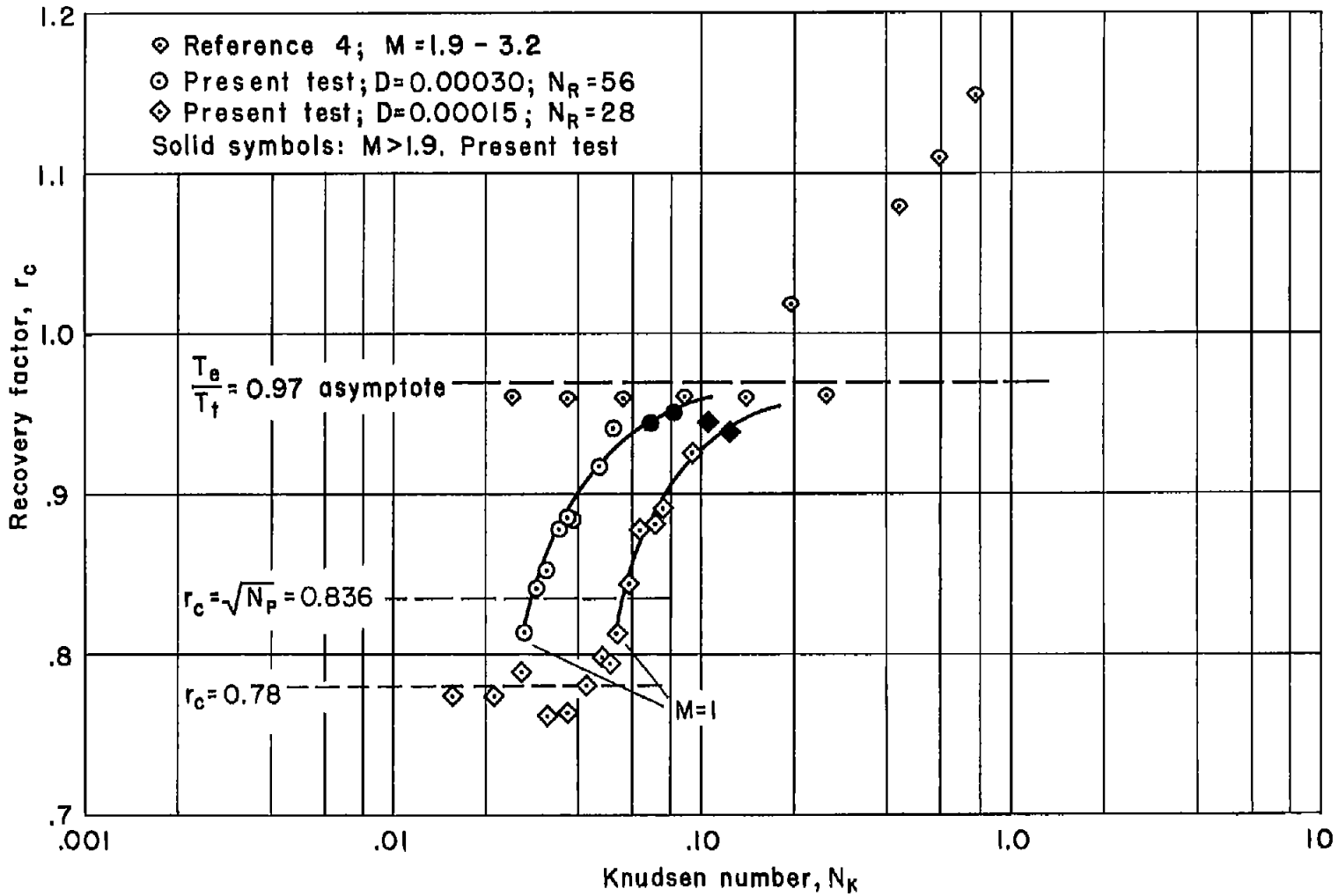

(b) Variation of recovery factor with Knudsen number for supersonic Mach numbers.

Figure 4.- Concluded.

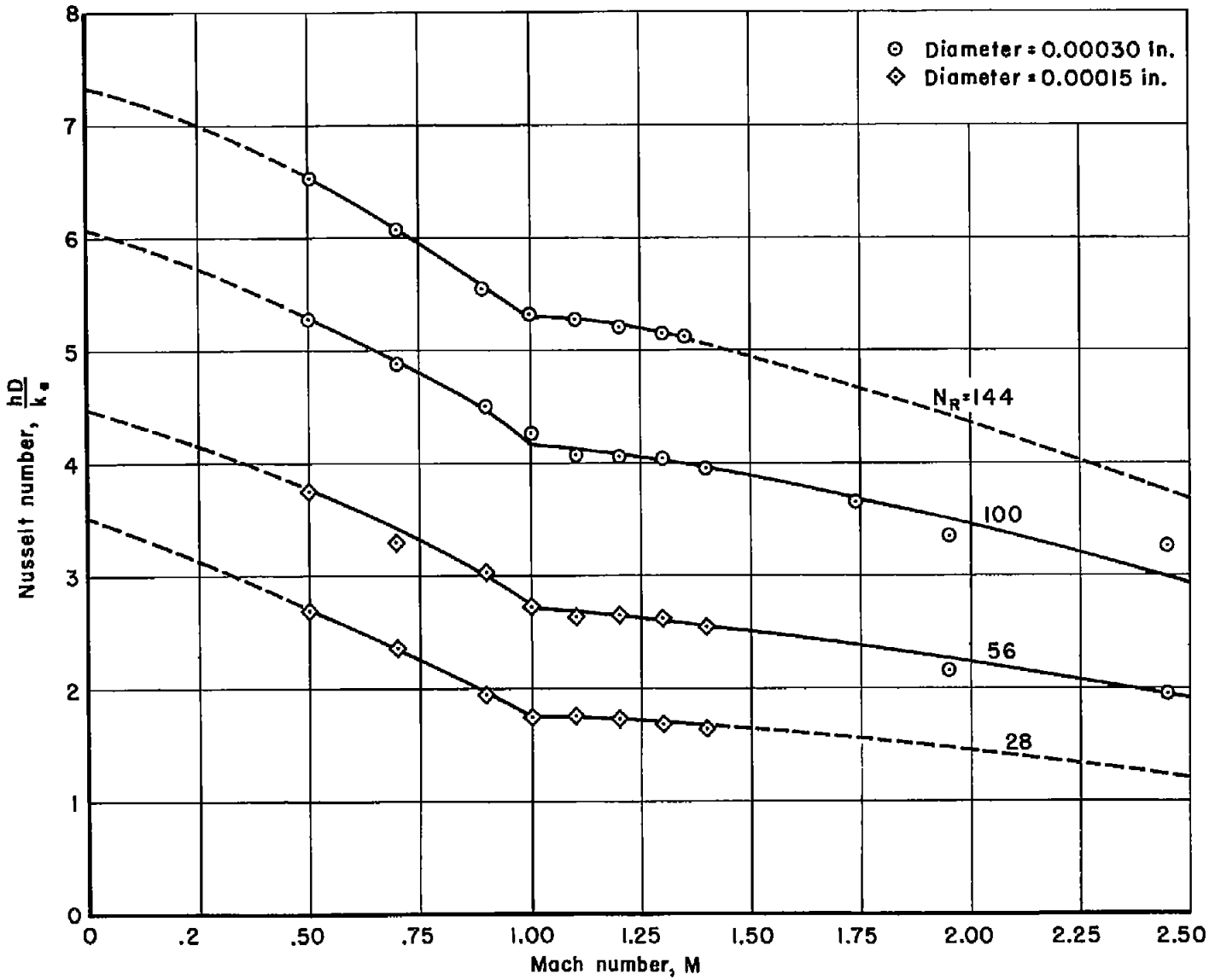

Figure 5.- Variation of Nusselt number with Mach number for a constant overheat ratio of 0.95.

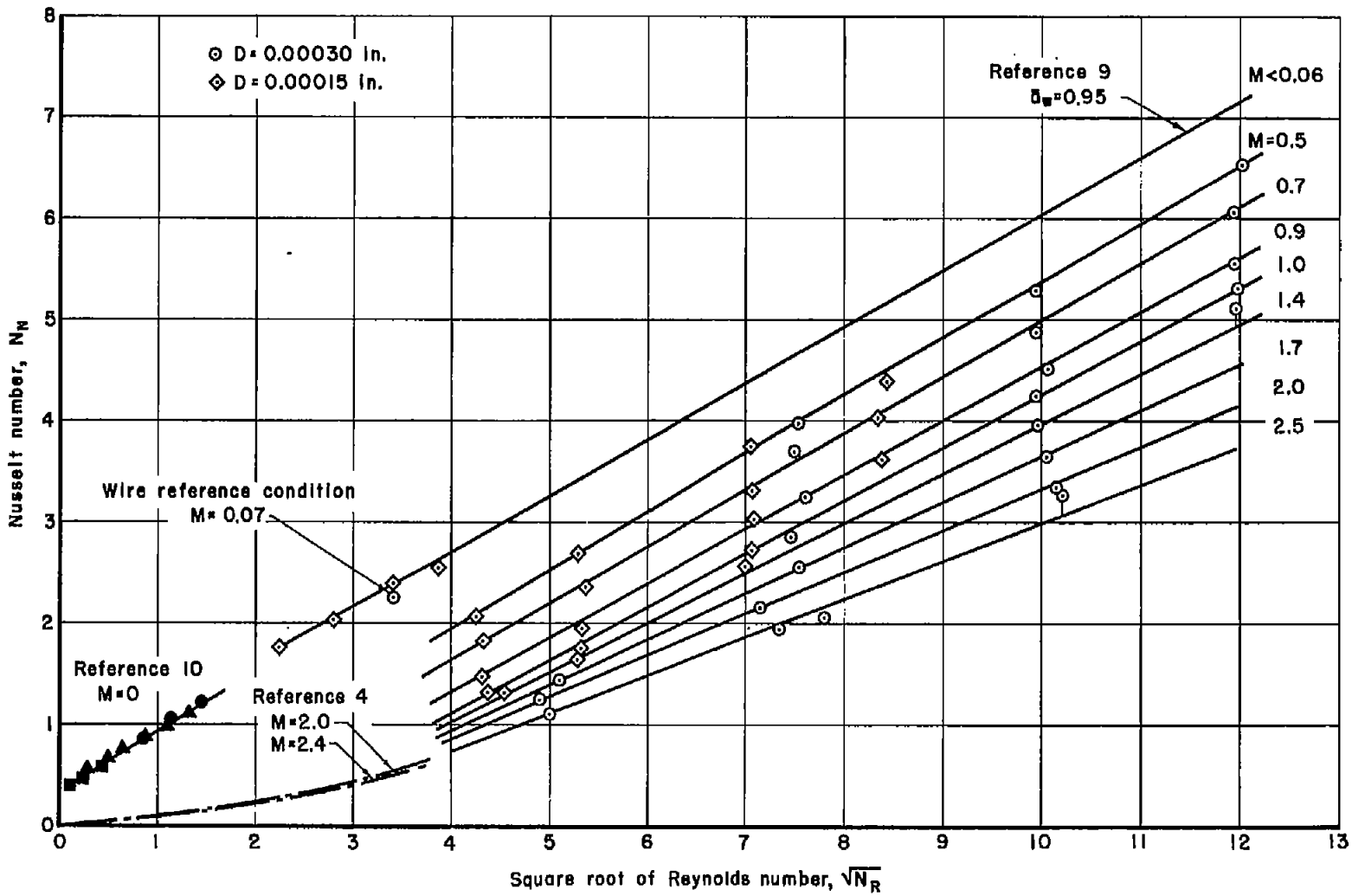

Figure 6.- Variation of Nusselt number with the square root of free-stream Reynolds number for a constant overheat ratio of 0.95.

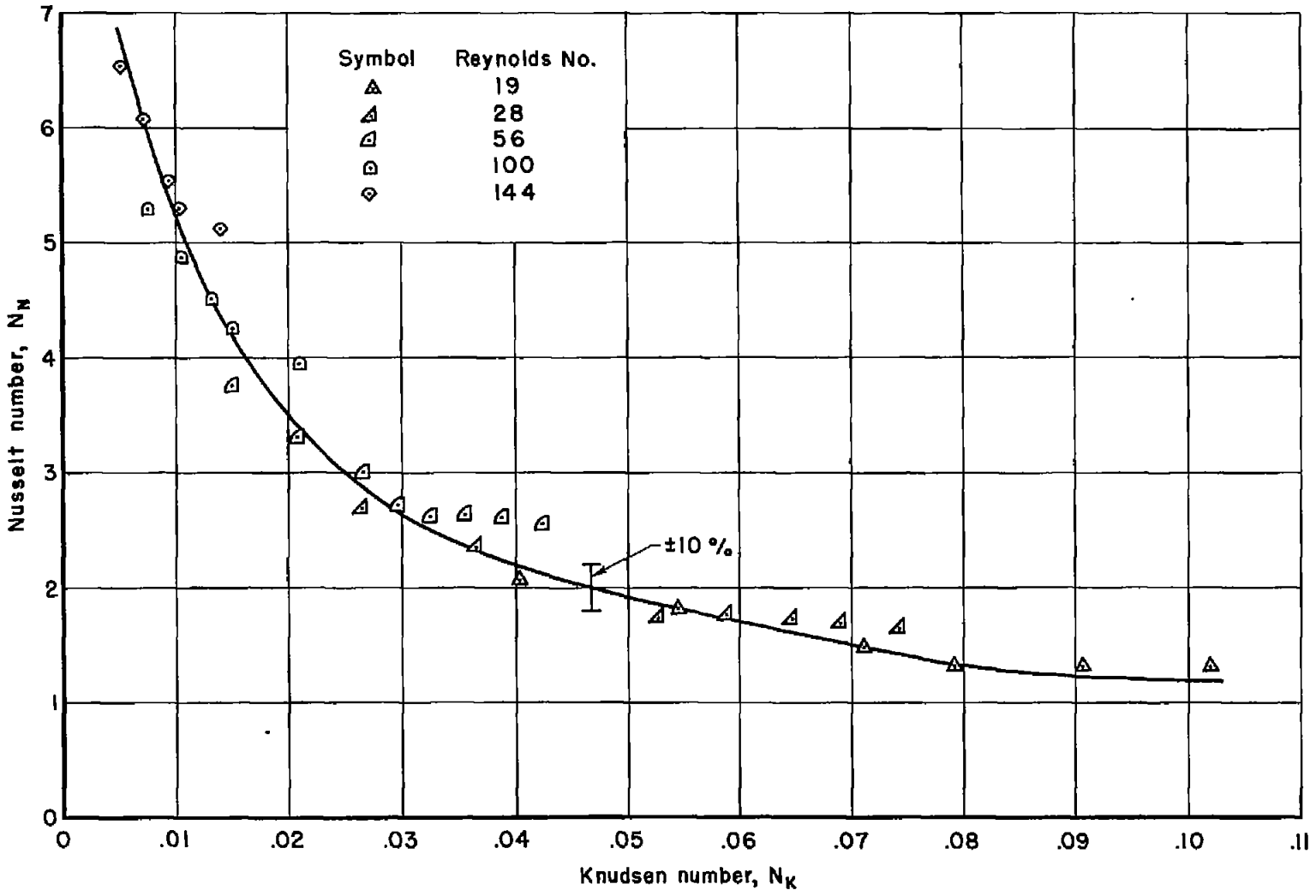

Figure 7.- Correlation of Nusselt number as a function of Knudsen number in the transonic Mach number range.

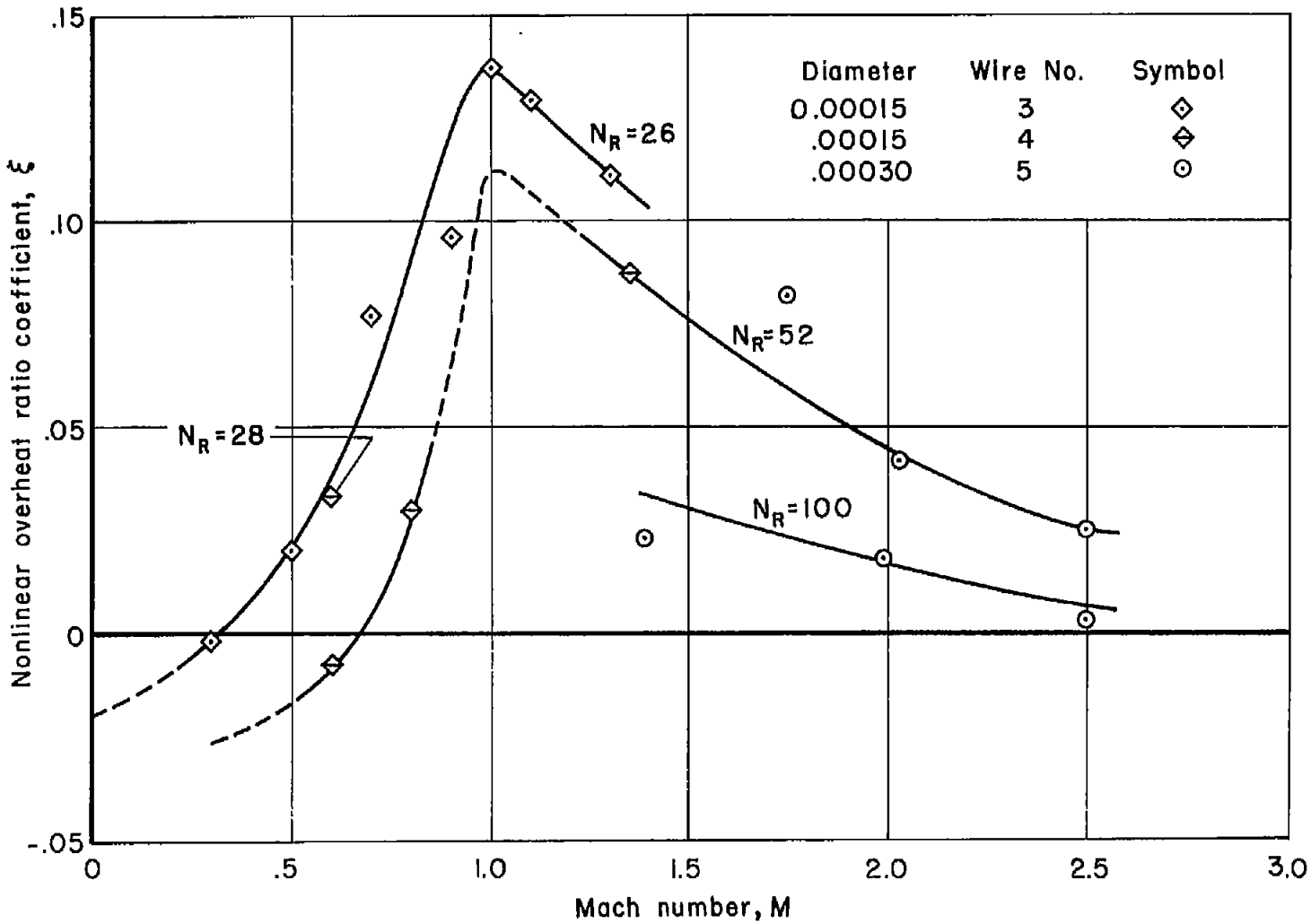

Figure 8.- Nonlinear overheat ratio coefficient measured at constant free-stream Reynolds numbers as a function of Mach number.

NACA - Langley Field, Va.