10423
NACA TN 4089

TECH LIBRARY KAFB, NM
0066960

NATIONAL ADVISORY COMMITTEE FOR AERONAUTICS

TECHNICAL NOTE 4089

THE MECHANISM OF THERMAL-GRADIENT MASS TRANSFER IN THE SODIUM HYDROXIDE - NICKEL SYSTEM

By Charles E. May

Lewis Flight Propulsion Laboratory
Cleveland, Ohio

Washington
September 1957

AFMDC
TECHNICAL LIBRARY
AFL 2811

TECH LIBRARY KAFB, NM

0066960

NATIONAL ADVISORY COMMITTEE FOR AERONAUTICS

TECHNICAL NOTE 4089

THE MECHANISM OF THERMAL-GRADIENT MASS TRANSFER IN THE SODIUM HYDROXIDE - NICKEL SYSTEM

By Charles E. May

4314

CH-1

SUMMARY

"Thermal-gradient mass transfer" was investigated in the molten sodium hydroxide - nickel system. Possible mechanisms (physical, electrochemical, and chemical) are discussed in terms of experimental and theoretical evidence. Experimental details are included in appendixes. The following mechanism is found to be most probable:

$$Na_2NiO_2 + 2Na \underset{\text{Hot zone}}{\overset{\text{Cold zone}}{\rightleftharpoons}} 2Na_2O + Ni$$

Kinetic equations are theoretically derived considering separately the following three factors as controlling the over-all rate of mass transfer: the chemical reaction, the diffusion process, and the forced circulation (if present). If the above mechanism is the true one, the chemical reaction is the rate-determining step in dynamic systems, and the diffusion process is the rate-controlling step in static systems. The beneficial and detrimental effects of additives are interpreted in terms of the probable mechanism.

Evidence is also presented to show that thermal-gradient mass transfer in the molten sodium hydroxide - copper system occurs by a similar mechanism.

INTRODUCTION

Sodium hydroxide is in many ways an attractive choice as a high-temperature heat-transfer fluid. Unfortunately, only a few materials are suitable for containing it in the molten condition at the temperatures desired, 1500° to 1700° F. Among these are nickel (refs. 1 to 3), copper, silver, gold (ref. 4), and some nickel-base alloys recently produced at the Lewis laboratory. Even these materials exhibit corrosion termed "thermal-gradient mass transfer", although they do not show intergranular

attack or rapid solution. Thermal-gradient mass transfer is the phenomenon by which the metal is removed (either chemically or physically) from the hotter regions of a system and deposited in colder regions. With the previously listed metals the deposit is in the form of needle-like crystals, the size of which depends upon the experimental conditions.

In order to find ways of inhibiting this type of corrosion, an investigation was conducted concerning the possible mechanisms for mass transfer. Although mass transfer also occurs in liquid metal systems (ref. 5; e.g., molten sodium in copper), the mechanism in such cases is undoubtedly purely physical in nature, being due to solution of the container material in the molten metal. In systems using sodium hydroxide, transfer is probably chemical in nature, and the process is believed to be similar for all the container materials previously mentioned. The purpose of this report is to establish the most probable mechanism for mass transfer in this system. This report discusses methods of measurement, choice of mechanism, kinetics, effect of additives, and alternate mechanisms. Many of the proofs require the use of previously unpublished experimental data, the details of which are included in the appendixes.

METHODS OF MEASUREMENT

At the Lewis laboratory two methods have been used to study the phenomenon of mass transfer; they are the static capsule test and the dynamic toroid test. Previous reports (refs. 1 to 3) describe these in detail. In the static test a vertical temperature gradient exists in nickel capsules (crucibles) with the hot zone at the bottom. This type of gradient was intended to produce thermal convection. The nickel dissolves from the bottom of the capsule and precipitates as a narrow ring at the liquid level of the sodium hydroxide. From radiographs of such capsules the relative amounts of transfer can be estimated qualitatively. The loss in weight of a nickel specimen placed in the hot zone (bottom) is found to be proportional to the amount of transfer in the cold zone (ref. 1).

In the circulating liquid runs made in toroids, radiographs of the cold sections also supply a convenient method for measuring mass transfer. Since the transferred nickel is spread over an extended area, the average reduction in internal diameter of the cold section of the toroid gives a quantitative measure of transfer.

CHOICE OF MECHANISM

In the study of the mechanism of thermal-gradient mass transfer, a most general case can be considered. In the cold zone all of the reactants R_j's combine to produce nickel and all of the other products P_i's:

$$\sum_j n_j R_j \rightarrow Ni + \sum_i m_i P_i$$

where n_j and m_i are the number of moles of R_j and P_i, respectively. The reverse reaction must occur at the hot zone to maintain the process. The requirements for such a cyclic reaction to occur are that at each temperature reaction occurs toward the attainment of equilibrium and that the equilibrium constant varies significantly with temperature. Thus, the concentrations are slightly displaced in one direction from equilibrium at the higher temperatures and in the other direction at the lower temperatures. Obviously, at some "mean temperature" the concentrations of the materials involved are in chemical equilibrium.

4314

As a consequence, three major processes are involved in any proposed mechanism: (1) the chemical reactions that occur at the hot and cold zones, (2) the migration (diffusion or circulation) of the species from the hot to the cold zone and vice versa, and (3) the initial adjustment of concentrations to "mean temperature" equilibrium, which sometimes requires additional chemical reactions. The evidence for or against a particular mechanism depends primarily upon the nature of the first process, the zone reactions.

CH-1 back

Possible Reactions

The first step in determining the mechanism of transfer was to enumerate all the possible reactions that could be envisioned (table I). A similar list is suggested in reference 6. These mechanisms can be divided into three primary groups: physical, electrochemical, and chemical. The chemical mechanisms have been subdivided as to whether the oxidizing-reducing pair in the equation

$$Na_2NiO_2 + \text{Reductant} \underset{\text{Hot zone}}{\overset{\text{Cold zone}}{\rightleftharpoons}} \text{Oxidant} + Ni$$

arises from an impurity, the disproportionation of nickel, or the sodium hydroxide. If the sodium hydroxide supplies the redox pair, the element actually involved in the oxidation could be either oxygen, hydrogen, or sodium. In the subsequent discussion, the oxidized form of nickel is generally represented as sodium nickelite (Na_2NiO_2), since this compound in the form of olive-green needle-like crystals has recently been isolated at the Lewis laboratory (appendix A) as well as at other laboratories (refs. 6 to 9). It likewise appears that this is the only oxidized form of nickel stable in molten sodium hydroxide (appendix A).

Means of Selection

The requirements for the actual mechanism are the following:

(1) The chemical species involved in the reactions should be feasible. Their presence should be supported either experimentally or theoretically.

(2) The mechanism should explain the apparent difference in the kinetics between static and dynamic tests. Since in static tests hydrogen simultaneously decreases the rate of transfer and the nickelite concentration (appendix B), it appears that the rate of transfer depends upon nickelite concentration. However, in dynamic toroid tests, even though the nickelite concentration increases with time (appendix C), the rate of transfer is independent of time. This indicates that the rate of transfer is independent of nickelite concentration.

(3) The mechanism should explain the effect of additives upon the rate of transfer. Special attention should be devoted to the compounds of chromium (appendixes D and E), since both metallic chromium and chromium sesquioxide (Cr_2O_3) inhibit transfer in static tests, while only chromium inhibits it in dynamic tests.

(4) There should be no experimental data in direct contradiction to the mechanism. However, all mechanisms except the last (reaction (7)) are contradictory to one or more experimental facts. These discrepancies are discussed later.

Sodium Mechanism

The following mechanism is considered to be the most probable one (table I, reaction (7)):

$$Na_2NiO_2 + 2Na \underset{\text{Hot zone}}{\overset{\text{Cold zone}}{\rightleftharpoons}} 2Na_2O + Ni$$

The sodium oxide is presumed to arise exclusively from dissociation of sodium hydroxide, which generates water at the same time. Theoretically, sodium oxide should exist in sodium hydroxide; thermodynamic calculations (appendix F) show that its equilibrium concentration can be as high as 2.7 mole percent. Its presence has also been supported experimentally (ref. 10). Sodium nickelite (appendix A) and metallic sodium (ref. 7) have definitely been found experimentally in the sodium hydroxide - nickel system. Metallic sodium has likewise been detected in the sodium hydroxide - copper system (appendix G). Sodium, as well as sodium nickelite, is formed by the hot-zone reaction. Since, however, the concentration of sodium nickelite does not reach a constant value (appendix C), undoubtedly most of it is formed by the reaction

$$Ni + 2NaOH \rightarrow H_2 + Na_2NiO_2$$

KINETICS

In order to explain the apparent differences between the results in static and dynamic tests, one must first derive the kinetic equations which are applicable to the mass transfer process. Any one of the following three factors can be considered to control the over-all rate of transfer: the rate of the chemical reaction, the rate of the diffusion process, and the rate of the circulation (if present). The equations in the next sections are developed in terms of the general reaction as written for the cold zone

$$\sum_j n_j R_j \rightarrow Ni + \sum_i m_i P_i$$

Chemical Reaction

When the chemical reaction is relatively slow, the molten material is essentially homogeneous with respect to the concentrations of all the chemical species. The rate of transfer r_t is obtained by considering the net rate of reaction in a unit area of the cold zone (denoted by the subscript c):

$$r_t = k_{f,c} \prod_j \left[R_j\right]^{n_j} - k_{r,c} \prod_i \left[P_i\right]^{m_i} a \tag{1}$$

where k_f is the rate constant of the forward reaction, k_r is the rate constant of the reverse reaction, a is the activity of the nickel metal, and [] indicates the concentration of the species. Rearranging gives

$$r_t = k_{f,c}\left(\prod_j \left[R_j\right]^{n_j}\right)\left(1 - \frac{k_{r,c}}{k_{f,c}} \frac{\prod_i \left[P_i\right]^{m_i} a}{\prod_j \left[R_j\right]^{n_j}}\right) \tag{2}$$

Since at some "mean temperature" (mentioned previously) the species involved are in chemical equilibrium, their concentrations are related to each other by the equilibrium constant K_e of that "mean temperature":

$$K_e = \frac{\prod_i \left[P_i\right]^{m_i} a}{\prod_j \left[R_j\right]^{n_j}} \tag{3}$$

The equilibrium constant K_c for the cold zone is given by the equation

$$K_c = k_{f,c}/k_{r,c} \tag{4}$$

Substituting equations (3) and (4) into equation (2) yields

$$r_t = k_{f,c}\left(\prod_j \left[R_j\right]^{n_j}\right)\left(1 - \frac{K_e}{K_c}\right) \tag{5}$$

From temperature-coefficient considerations,

$$\frac{K_e}{K_c} = e^{\Delta H/RT_c - \Delta H/RT_e} \tag{6}$$

where ΔH is the enthalpy of the reaction as written for the cold zone, R is the gas constant, T_c is the temperature of the cold zone, and T_e is the equilibrium temperature. Substituting equation (6) into equation (5) gives

$$r_t = k_f\left(\prod_j \left[R_j\right]^{n_j}\right)\left(1 - e^{\Delta H/RT_c - \Delta H/RT_e}\right) \tag{7}$$

Finally, by expanding the exponential and assuming $T_e - T_c$ (ΔT in eq. (8)) to be small, the rate of mass transfer is obtained for a chemical-reaction-controlled process:

$$r_t = -k_f\left(\prod_j \left[R_j\right]^{n_j}\right)\frac{\Delta H \Delta T}{RT^2} \tag{8}$$

or similarly,

$$r_t = -k_r a\left(\prod_i \left[P_i\right]^{m_i}\right)\frac{\Delta H \Delta T}{RT^2} \tag{9}$$

Diffusion Process

If the chemical reactions concerned are relatively fast, diffusion of the products and reactants may become the governing factor for the rate process. The resulting rate equation can be most easily derived for

two nickel plates, each of unit area, at different temperatures, and placed parallel to each other at a distance l apart in molten sodium hydroxide. The temperature difference and the speed of the chemical reaction give rise to concentration differences ΔP_i and ΔR_j for the species surrounding the two plates. These plates are designated by the subscripts h for hot and c for cold.

The rate of transfer, being equal to the rate of diffusion of each species, is given by

$$r_t = \frac{m_i k_i}{l}\left(\left[P_{i,c}\right] - \left[P_{i,h}\right]\right) = \frac{n_j k_j}{l}\left(\left[R_{j,h}\right] - \left[R_{j,c}\right]\right) \tag{10}$$

or simply

$$r_t = \frac{m_i k_i \Delta P_i}{l} = \frac{n_j k_j \Delta R_j}{l} \tag{11}$$

where the k_i's and k_j's are diffusion constants for the i'th and j'th species. Multiplication of equations (10) and (11) by $S/k_i[P_i]$ and $S/k_j[R_j]$, respectively, and then summation over all i's and j's results in

$$r_t l\left(\sum_i \frac{1}{k_i\left[P_i\right]} + \sum_j \frac{1}{k_j\left[R_j\right]}\right) = \sum_i \frac{m_i \Delta P_i}{\left[P_i\right]} + \sum_j \frac{n_j \Delta R_j}{\left[R_j\right]} \tag{12}$$

or

$$r_t = \left(\sum_i \frac{m_i \Delta P_i}{\left[P_i\right]} + \sum_j \frac{n_i \Delta R_j}{\left[R_j\right]}\right) \Big/ l\left(\sum_i \frac{1}{k_i\left[P_i\right]} + \sum_j \frac{1}{k_j\left[R_j\right]}\right) \tag{13}$$

The numerator can be evaluated from equilibrium considerations as follows. Since chemical equilibrium exists at the hot and cold zones, the respective equilibrium constants K_h and K_c are

$$K_h = \frac{\prod_i \left[P_{i,h}\right]^{m_i}}{\prod_j \left[R_{j,h}\right]^{n_j}} \tag{14}$$

and

$$K_c = \frac{\prod_i \left[P_{i,c}\right]^{m_i a}}{\prod_j \left[R_{j,c}\right]^{n_j}} \tag{15}$$

From temperature-coefficient considerations,

$$\frac{K_h}{K_c} = e^{\Delta H/RT_c - \Delta H/RT_h} \tag{16}$$

where T_h is the temperature of the hot zone. Combining equations (14), (15), and (16) gives

$$e^{\Delta H/RT_c - \Delta H/RT_h} = \prod_i \left(\frac{\left[P_{i,h}\right]}{\left[P_{i,c}\right]}\right)^{m_i} \Big/ \prod_j \left(\frac{\left[R_{j,h}\right]}{\left[R_{j,c}\right]}\right)^{n_j} \tag{17}$$

The concentrations at the hot zone expressed in terms of the concentrations at the cold zone are

$$e^{\Delta H/RT_c - \Delta H/RT_h} = \frac{\prod_i \left(1 - \frac{\Delta P_i}{\left[P_{i,c}\right]}\right)^{m_i}}{\prod_j \left(1 + \frac{\Delta R_j}{\left[R_{j,c}\right]}\right)^{n_j}} \tag{18}$$

Expanding $\prod_i$ and $\prod_j$ and assuming that the ΔR_j's and ΔP_i's are small with respect to the corresponding R_j's and P_i's yields

$$e^{\Delta H/RT_c - \Delta H/RT_h} = 1 - \sum_i \frac{m_i \Delta P_i}{\left[P_{i,c}\right]} - \sum_j \frac{n_j \Delta R_j}{\left[R_{j,c}\right]} \tag{19}$$

Expanding the exponential with ΔT, $T_h - T_c$, assumed to be small gives

$$\frac{-\Delta H \Delta T}{RT^2} = \sum_i \frac{m_i \Delta P_i}{[P_i]} + \sum_j \frac{n_j \Delta R_j}{[R_j]} \tag{20}$$

Combining equations (13) and (20), one obtains

$$r_t = -\Delta H \Delta T / RT^2 l \left(\sum_i \frac{1}{k_i [P_i]} + \sum_j \frac{1}{k_j [R_j]} \right) = -k_a \Delta H \Delta T / RT^2 l \left(\sum_i \frac{k_a}{k_i [P_i]} + \sum_j \frac{k_a}{k_j [R_j]} \right) \tag{21}$$

where k_a is the average-diffusion-rate constant.

Circulation

In a system with force flow the rate of transfer may be controlled by the rate of circulation k_{cir} (in cps). In a static system with thermal convection a value for k_{cir} might be difficult to assign. Nevertheless, the rate of transfer in a circulation-controlled system can be expressed as

$$r_t = Ck_{cir} m_i \Delta P_i = Ck_{cir} n_j \Delta R_j \tag{22}$$

where C expresses the dependence of r_t on the volume of the melt. The following equation can then be obtained, in a similar manner to that for equation (13),

$$r_t = Ck_{cir} \left(\sum_i \frac{m_i \Delta P_i}{[P_i]} + \sum_j \frac{n_j \Delta R_j}{[R_j]} \right) \Big/ \left(\sum_i \frac{1}{[P_i]} + \sum_j \frac{1}{[R_j]} \right) \tag{23}$$

Since chemical equilibrium exists at the higher and lower temperatures, equation (20) is again valid. Upon substituting equation (20) into equation (23),

$$r_t = -Ck_{cir} \Delta H \Delta T / RT^2 \left(\sum_i \frac{1}{[P_i]} + \sum_j \frac{1}{[R_j]} \right) \tag{24}$$

It is readily noted that in all three cases (eqs. (9), (21), and (24)) the rate of transfer (to the first approximation) is proportional to the change in enthalpy of the reaction as written for the cold zone. Inasmuch as the rate r_t is positive as written, the enthalpy must be negative. To the first approximation the transfer is proportional to the difference in temperature; this point has been supported experimentally (ref. 1).

Application of Equations

For the sodium mechanism the three kinetic equations would be:

$$r_t(\text{chemical}) = \frac{-k_r a \Delta H \Delta T}{RT^2\left(\frac{1}{[Na_2O]}\right)^2} \tag{25}$$

$$r_t(\text{diffusion}) = \frac{-k_a \Delta H \Delta T}{RT^2 i\left(\frac{k_a}{k_1[Na_2O]} + \frac{k_a}{k_2[Na]} + \frac{k_a}{k_3[Na_2NiO_2]}\right)} \tag{26}$$

$$r_t(\text{circulation}) = \frac{-k_{cir} C \Delta H \Delta T}{RT^2\left(\frac{1}{[Na_2O]} + \frac{1}{[Na]} + \frac{1}{[Na_2NiO_2]}\right)} \tag{27}$$

In a chemically controlled process the rate of transfer is constant as long as the equilibrium concentration of sodium oxide is not disturbed significantly by the zone reaction

$$Na_2NiO_2 + 2Na \underset{\text{Hot zone}}{\overset{\text{Cold zone}}{\rightleftharpoons}} 2Na_2O + Ni$$

If the equilibrium constant for the zone reaction has a value which keeps the sodium concentration low with respect to that of sodium oxide, the latter is not appreciably affected.

In a diffusion-controlled process, the effect of the sodium concentration might be ignored if k_2 is relatively large, as would be predicted from the uncharged nature and the small size of an atom of metallic sodium. Thus, the rate of transfer should depend upon the nickelite concentration, since it is of the same order of magnitude as the sodium oxide concentration. ($[Na_2NiO_2]$ = 0.2 mole percent at 24 hr, calculated from data in table VIII; $[Na_2O]$ = 0.02 to 2.7 mole percent, appendix F.)

The rate of circulation-controlled transfer (eq. (27)) can be considered next. Since the sodium concentration is less than the nickelite concentration, the term $1/[Na]$ affects the rate of transfer more than the term $1/[Na_2NiO_2]$. Therefore, since $1/[Na]$ is proportional to the nickelite concentration, the rate of mass transfer must decrease as the nickelite concentration increases.

One therefore concludes that the rate of transfer in dynamic systems is chemically controlled, since it is independent of sodium nickelite concentration. However, transfer in static systems must be diffusion controlled, since its rate increases with nickelite concentration (appendix B). In static tests the rate of transfer should then increase with time. The increased rate of specimen weight loss with time in capsule tests (table VIII, column 9) is an indication of this increased rate of transfer.

EFFECT OF ADDITIVES

In a chemically controlled mechanism (dynamic system) additives may affect the rate of transfer in the following ways:

(1) By changing the concentration of the sodium oxide

(2) By supplying an auxiliary transfer mechanism

(3) By changing the activity of the nickel metal

The first two methods of affecting the rate of transfer are also valid in a diffusion-controlled mechanism (static system). However, the third method, changing the activity of the nickel, should have no effect; instead changing the concentration of sodium nickelite should affect the rate of transfer as stated previously.

Sodium Oxide

One would predict that the addition of sodium oxide and sodium metal (which would effectively increase the sodium oxide concentration) to either a static or dynamic system should increase the rate of mass transfer. This has been verified experimentally (ref. 3). Adding calcium, sodium hydride, lithium hydride, and calcium nitride (being equivalent to adding metallic sodium) should likewise increase the rate of transfer. For example, the reaction with calcium is

$$Ca + 2NaOH \rightarrow Ca(OH)_2 + 2Na$$

This also is demonstrated in references 2 and 3. The fast decomposition of the sodium hydride and lithium hydride should allow all the hydrogen thus generated to diffuse rapidly through the nickel and thus to produce no beneficial effect.

In cases in which metallic additives react with sodium hydroxide to produce sodium oxide, an increased rate of transfer should again be expected. This point is perhaps illustrated in the increased rate of transfer caused by addition of manganese, iron, titanium, vanadium, and molybdenum:

$$Mo + 6NaOH \rightarrow Na_2MoO_4 + 2Na_2O$$

Water

Additions of water in small amounts should suppress the sodium oxide concentration and inhibit transfer. In static tests where gas saturated with water vapor was passed over the sodium hydroxide in the nickel crucible being tested, transfer was decreased (ref. 3).

Additions of certain oxides may be equivalent to adding water, as is evident from the equation

$$CoO + 2NaOH \rightarrow Na_2CoO_2 + H_2O$$

This may be the case when inhibition of transfer results from the use of the following: cobalt oxide, cupric oxide, cuprous oxide, stannous oxide, manganese monoxide, and zirconium dioxide (ref. 11). The effectiveness of stannous oxide, manganese monoxide, and cuprous oxide may be partially due to their reducing action. In order for beneficial effects due to water to be observed, the additive must either be added after purging or react only at temperatures higher than the purging temperature.

It is possible that too much water might result in an auxiliary reaction such as

$$Na_2NiO_2 + 2Na + 2H_2O \underset{\text{Hot zone}}{\overset{\text{Cold zone}}{\rightleftharpoons}} Ni + 4NaOH$$

This may account for the case of unpurged sodium hydroxide in which the rate of transfer was increased (ref. 2). This reaction may also account for the fact that any beneficial effects attributable to the presence of water are always slight.

Metallic Chromium

Metallic chromium is an inhibitor of mass transfer (ref. 2). The method by which chromium works is not by decreasing the nickelite concentration (appendix D).

Experiments show that metallic chromium reacts rapidly with molten sodium hydroxide to form sodium chromite (Cr^{+3}), which then reacts more slowly (for 20 hr) to form sodium hypochromate (Cr^{+5})(appendix E). This chromite-hypochromate reaction is in equilibrium with the hydrogen pressure (appendix E). Since the nickel-nickelite reaction is not in equilibrium with hydrogen (appendix C), the following reaction cannot be at "mean-temperature" equilibrium:

$$Ni + Na_5CrO_5 \underset{\text{Hot zone}}{\overset{\text{Cold zone}}{\rightleftharpoons}} Na_3CrO_3 + Na_2NiO_2$$

The chromium is therefore not effective by means of this auxiliary mechanism. In some way the chromite and hypochromate form a complex in an approximate ratio of 1 to 1 at 1500° F and 1 to 1.1 at 1700° F. Therefore, it is reasonable that either of the species might partially complex with sodium oxide and thus inhibit mass transfer (both in static and dynamic tests).

The question which now arises is why the chromite formed from metallic chromium reacts differently from the chromite formed from chromium sesquioxide (appendix D). Even though both may form sodium chromite, the coordination of the oxygen atoms about the chromium might be different; this is quite common among water-soluble salts of chromium. If the mechanism by which transfer is inhibited using metallic chromium involves coordination (complex formation), chromium sesquioxide obviously need not inhibit transfer in the same manner as metallic chromium.

Reducing Agents

Since chromium sesquioxide reduces the sodium nickelite concentration (appendix D) presumedly by the generation of hydrogen, it should inhibit mass transfer when the transfer is a diffusion-controlled process. Indeed transfer is inhibited in static tests by chromium sesquioxide (appendix D) but not in dynamic tests recently performed at the Lewis laboratory. Another reducing agent, calcium hydride, also inhibits transfer in static tests but not in dynamic tests (ref. 3). Hence, directly applied hydrogen pressure which inhibits transfer in static tests should not necessarily be effective in dynamic tests. Published work on this effect is inconclusive (ref. 11). Hydrogen could inhibit transfer in dynamic tests if its poisoning action were sufficient to reduce the

activity of the nickel. (Calcium hydride increases the rate of transfer in dynamic systems, because its decomposition produces "detrimental" calcium metal as well as "beneficial" hydrogen.)

Oxidizing Agents

Oxidizing agents should have the opposite effect of reducing agents upon the rate of transfer, since they should increase the sodium nickelite concentration. This is the effect found in static systems for materials such as sodium peroxide, ferric oxide, potassium chlorate, potassium chromate, sodium chromate, calcium chromate, cobaltousic oxide, manganese dioxide, sodium bromate, and lead sesquioxide (refs. 2 and 11). This effect is not expected in dynamic tests, but none of these additives have ever been studied under such conditions.

Insoluble Compounds

Apparent inhibition of transfer resulted in static tests from additions of aluminum, aluminum oxide, sodium aluminate, aluminum fluoride, magnesium oxide, calcium chloride, and strontium peroxide (refs. 2, 3, and 11). This has been attributed to the formation of protective insoluble layers over the specimens, sodium aluminate in the case of aluminum compounds, and insoluble oxides from the others.

Inert Materials

Since silver, gold, and copper do not react rapidly with sodium hydroxide, no effect is produced by using these metals as additives (ref. 11). Other materials, such as salts that are inert to sodium hydroxide (sodium chloride, sodium fluoride, and sodium iodide) and ceramic materials stable at 1500° and 1700° F (tantalum nitride and columbium nitride), should not and do not have any effect upon mass transfer (refs. 2 and 11).

CONSIDERATION OF ALTERNATIVE MECHANISMS

Physical Mechanism

In considering the physical mechanism (table I, reaction (1)) one may admit that nickel is soluble

$$Ni^{0}(\text{dissolved}) \underset{\text{Hot zone}}{\overset{\text{Cold zone}}{\rightleftharpoons}} Ni^{0}(\text{metal})$$

in molten sodium hydroxide and that as soon as saturation is reached transfer could occur.

Although mass transfer might be attributable to this mechanism, experiments with hydrogen atmospheres show its contribution to be quite small, since the presence of hydrogen reduces the rate of transfer by a large factor (appendix B and ref. 3). In no way is it conceivable that hydrogen reduces the solubility of nickel in molten sodium hydroxide. A large variety of other materials in small quantities do affect the rate of transfer (appendixes D and E and refs. 2 and 3). It does not seem plausible that such materials would affect transfer if it were just a problem of physical solubility.

Electrical Mechanism

The second possible mechanism for transfer involves the electrochemical half-cell reactions (table I, reaction (2))

$$Na_2NiO_2 + 2Na^+ + 2e^- \underset{\text{Hot zone}}{\overset{\text{Cold zone}}{\rightleftharpoons}} 2Na_2O + Ni$$

This mechanism requires the existence of an electromotive force between nickel at the hot zone and nickel at the cold zone. Such a potential has been observed experimentally (appendix H and ref. 12); it is probably attributable to reaction (2). Moreover, this potential is sufficient to sustain a current of measurable magnitude for 6 hours (appendix H). The electrochemical reaction requires that, since the sodium nickelite concentration builds up with time (appendix C), the electromotive force as well as the actual rate of transfer should decrease with time. This is contrary to fact. Also, in the presence of hydrogen, the mass transfer should occur from the cold zone to the hot zone in accordance with the reversal of polarity observed with a hydrogen atmosphere (appendix H).

The conclusions are that the electrochemical process may be occurring, but that its contribution to the mass transfer actually observed is small and as time progresses becomes less and less. In the presence of a hydrogen atmosphere this process cannot occur at all. An additional proof is the fact that crystals of nickel plate out on a ceramic material in cold regions (ref. 6); in this case an electrochemical process is impossible.

The latter conclusions are of course valid even though the half-cell reactions might involve nickel with a valence of +3:

$$NaNiO_2 + 3Na^+ + 3e^- \underset{\text{Hot zone}}{\overset{\text{Cold zone}}{\rightleftharpoons}} 2Na_2O + Ni$$

Impurity Mechanism

Of the impurities present in sodium hydroxide (table II) and nickel (table III), only iron, cobalt, and manganese could contribute to the impurity mechanism, since the element involved must exist in two oxidized valence states:

$$Na_2NiO_2 + 2Na_2FeO_2 \underset{\text{Hot zone}}{\overset{\text{Cold zone}}{\rightleftharpoons}} 2Na_3FeO_3 + Ni$$

$$Na_2NiO_2 + 2Na_2CoO_2 \underset{\text{Hot zone}}{\overset{\text{Cold zone}}{\rightleftharpoons}} 2Na_3CoO_3 + Ni$$

$$2Na_2NiO_2 + Na_2MnO_2 \underset{\text{Hot zone}}{\overset{\text{Cold zone}}{\rightleftharpoons}} Na_2MnO_4 + 2Na_2O + 2Ni$$

The probability that a sulfate, a phosphate, silver, or copper would exist in two ionic valences is exceedingly small. Because of the small concentrations of all the impurities, this type mechanism, although possible, is still not probable.

The concentration of impurities arising from the nickel increases in the sodium hydroxide with time (ref. 6), and thus the rate of transfer should increase. The rate of transfer does not increase with time in dynamic tests.

Finally, all these impurities were deliberately added (in some form) to the sodium hydroxide, and although some apparently increase transfer (perhaps fivefold by qualitative estimate)(table IV), this increase is not proportional to the thousandfold increase of the impurity concentration.

Disproportionation Mechanism

The next mechanism to consider is the disproportionation reaction of nickel (table I, reaction (4))

$$3Na_2NiO_2 \underset{\text{Hot zone}}{\overset{\text{Cold zone}}{\rightleftharpoons}} 2Na_3NiO_3 + Ni$$

Again reference is made to the fact that the sodium nickelite concentration increases with time (appendix C). Since the nickelite and nickelate must be in "mean temperature" equilibrium, the concentration of the

nickelate must also increase. Therefore, the transfer rate should depend on the nickelite concentration regardless of how the rate process is controlled. The same is true even if the chemical equation is

$$3Na_2NiO_2 \underset{\text{Hot zone}}{\overset{\text{Cold zone}}{\rightleftharpoons}} 2NaNiO_2 + 2Na_2O + Ni$$

Since the transfer rate in dynamic systems is experimentally independent of nickelite concentration, the actual mechanism cannot involve disproportionation of nickel.

4314

Furthermore, the higher valences of nickel should not exist in the presence of a hydrogen pressure (ref. 6) such as has been reported to exist above the nickel - sodium hydroxide system at 800° C (4 mm Hg, ref. 7).

Oxygen Mechanism

CE-3

The possibility that oxygen is the "redox" material according to the equation

$$Na_2NiO_2 \underset{\text{Hot zone}}{\overset{\text{Cold zone}}{\rightleftharpoons}} Na_2O + 1/2\ O_2 + Ni$$

is nil, since the 4 millimeters of mercury pressure of hydrogen (ref. 7) eliminates the possibility that oxygen is present at all.

Hydrogen Mechanism

The mechanism that for a long time seemed the most logical involves hydrogen as the redox material; the reaction is (table I, reaction (6))

$$Na_2NiO_2 + H_2 \underset{\text{Hot zone}}{\overset{\text{Cold zone}}{\rightleftharpoons}} 2NaOH + Ni$$

The reaction between nickel and sodium hydroxide is known to occur, since both hydrogen and sodium nickelite are found as products; the problem is whether this reaction can go in reverse. This seemed possible, since nickel oxide (assumed to be the oxidized form of nickel) is easily reduced by hydrogen. Experiments under isothermal conditions with a constant imposed hydrogen pressure (appendix C) showed that the rate of formation of sodium nickelite is constant even up to times of 600 hours. Thus, equilibrium is not reached, the reverse reaction never occurs, and this mechanism could never account for transfer. Even with no added hydrogen, equilibrium is not reached, inasmuch as the concentration of sodium

nickelite does not reach a constant value (table VIII, column 7). The decrease in the rate of formation of sodium nickelite caused by hydrogen must be due to its direct poisoning action upon the nickel.

Since the concentration of species of nickel other than Ni^{+2} (e.g., Ni^{+3}) which might be in equilibrium with the hydrogen present is extremely low (ref. 6), the corresponding reactions involving this concentration need not be considered.

SUMMARY OF RESULTS

The following zone reactions are the probable ones occurring in thermal-gradient mass transfer of nickel in molten sodium hydroxide:

$$Na_2NiO_2 + 2Na \underset{\text{Hot zone}}{\overset{\text{Cold zone}}{\rightleftharpoons}} 2Na_2O + Ni$$

The diffusion of the molecular species in the melt allows the process to continue indefinitely. The sodium oxide arises from the dissociation of sodium hydroxide at high temperatures. The sodium nickelite (Na_2NiO_2) is formed primarily from the following reaction and at a constant rate with any given pressure of hydrogen:

$$2NaOH + Ni \Rightarrow H_2 + Na_2NiO_2$$

In dynamic tests, the rate of transfer is controlled by the rate of the zone reactions and thus is constant with time. In static tests, the rate of transfer is controlled by the rate of diffusion and thus increases with time.

The effects of additives upon the rate of transfer can be explained in terms of this mechanism. Additives which effectively increased the sodium oxide concentration increase the rate of transfer; those which decrease this concentration decrease the rate of transfer. Reducing agents decrease the rate of transfer in static tests and have no effect in dynamic tests. Oxidizing agents have the opposite effect in static tests.

Lewis Flight Propulsion Laboratory
National Advisory Committee for Aeronautics
Cleveland, Ohio, June 20, 1957

APPENDIX A

EXISTENCE OF SODIUM NICKELITE IN SODIUM HYDROXIDE - NICKEL SYSTEM

An investigation was made to demonstrate the existence of sodium nickelite in the sodium hydroxide - nickel system. The existence of this or a similar compound is necessary for six of the seven possible mechanisms of mass transfer (table I). The nature of the hydrolysis product of sodium nickelite was also studied in order to substantiate the theory that nickel was present in the +2 valence state. The reaction between nickel oxide and sodium hydroxide was investigated to show the relative instability of this compound with respect to sodium nickelite.

Materials and Procedure

The "L" nickel crucibles as well as the procedure used in this preparation were identical to those used in the standard static capsule test used at the Lewis laboratory (fig. 1 and refs. 2 and 3). The crucibles were 5 inches long and had an outside diameter of 5/8 inch and 1/16-inch-thick walls. All the crucible components except the vent tube were fabricated from the same length of tubing.

Before the crucibles were assembled, the components were cleaned in a modified aqua regia solution for 2 minutes. Heliarc welding with an atmosphere containing 15 percent hydrogen in helium was used in fabrication. A flow of argon was maintained in the tube during welding. Sodium hydroxide (13.0±0.1 g) was weighed into each crucible in the dry box. The top and vent tube were then welded into place. The moisture and air were removed by evacuation to 5 microns of mercury at 580° F (in 16 hr) and then to 5 microns of mercury at 720° F (in 4 hr). After evacuation and cooling, a cover gas of helium at about 2 pounds per square inch gage was admitted. Crimping and welding at the crimp served to seal the crucible. Thermocouples were spot welded to the crucibles 1/8 inch from the bottom and also at the liquid level. A special furnace (ref. 2) was used.

Isolation and Identification of Sodium Nickelite

Four crucibles were heated to 1700° F for 24 hours. After cooling, they were cut into sections about 1/2 inch long in a dry helium atmosphere. Olive to dark-green needle-like crystals about 1/8 inch long were visible throughout the white sodium hydroxide matrix. Similar crystals are reported in reference 6. The sodium hydroxide was dissolved away from the crystals with absolute methyl alcohol. The X-ray powder diffraction pattern (table V) determined for the crystals matched the ones which

have been reported by other laboratories (refs. 7 and 9) and assigned the formula Na_2NiO_2. No lines of nickel oxide or nickel hydroxide were found. The utmost care was used to keep air and moisture away from the crystals at all times. The chemical analysis reported for this compound (residue) in reference 9 roughly corresponds to the formula Na_2NiO_2. Reference 7 reports an X-ray pattern from a residue obtained by heating sodium hydroxide in nickel until all the hydrogen present was evolved as a gas; this would likewise correspond to the formula Na_2NiO_2. The fact that the pattern of this work matches the others indicates that sodium nickelite does not significantly react with absolute methyl alcohol. 4314

No well defined crystals were obtained by heating sodium hydroxide in nickel at 1500° F, since the nickelite concentration was too small.

Preparation of Hydrolysis Products

In order to investigate the hydrolysis products, other crucibles were prepared in the way described previously. After the 24-hour treatment at 1700° F, the contents of the crucibles were washed out with distilled water and the crystals present were allowed to remain in the water about 3 days. Bright grass-green needle-like crystals were formed. There was also present a slight amount of fine black precipitate, which was probably formed from the hydrolysis of sodium nickelite dissolved in the sodium hydroxide. After removal of the black precipitate by decantation, the green crystals were washed and then dried in a desiccator containing Drierite. They were shown spectroscopically to contain no sodium, and their X-ray pattern matched that for nickel hydroxide ($Ni(OH)_2$). The individual crystals were hexagonal in shape as seen under a microscope. The crystals turned black upon drying at 120° C for 24 hours but still retained the same crystalline form and X-ray pattern. The crystals lost 11.8 percent of their weight during the heating process. The chemical analysis of the black crystals showed them to be nickel hydroxide ($Ni(OH)_2$). Although the green crystals correspond to the composition $Ni(OH)_2 \cdot H_2O$, they probably contain merely physically trapped water (inasmuch as the X-ray pattern was unchanged).

At 1500° F the reaction between sodium hydroxide and nickel did not yield a crystalline hydrolysis product (except in one isolated instance). The black to brown powder regularly obtained by filtering the water solution of the melt nevertheless gave the X-ray pattern for nickel hydroxide. This powder was probably the same as the slight amount of black powder obtained from the crucible run at 1700° F.

Hydrolysis Products from Reaction of Sodium Hydroxide with Nickel Oxide

A nickel crucible containing 0.13 gram of nickel oxide and the usual 13 grams of sodium hydroxide was purged, sealed, and heated to 1700° F for 15 minutes. When the contents were washed out, large grass-green needle-like crystals were found. Only a trace of the nickel oxide X-ray pattern was detectable in the nickel hydroxide pattern found for these green crystals. X-ray patterns of individual crystals proved them to be actually polycrystalline.

Conclusions

The reaction between nickel and molten sodium hydroxide produces sodium nickelite (Na_2NiO_2). The sodium nickelite can be isolated as needle-like crystals if the reaction occurs at 1700° F but not if it occurs at 1500° F or lower; this is attributed to the greater concentration of the nickelite at 1700° F (table VIII) and to a probably large rate of change of solubility with temperature between 1500° and 1700° F.

The reaction between nickel oxide and sodium hydroxide at 1700° F (and likely below that temperature) also produces sodium nickelite (indicated by the presence of its hydrolysis product nickel hydroxide):

$$NiO + 2NaOH \rightarrow Na_2NiO_2 + H_2O$$

Since this reaction goes essentially to completion, very little possibility exists that the species NiO can be present in molten sodium hydroxide - nickel systems.

The reaction between sodium nickelite and water

$$Na_2NiO_2 + 2H_2O \rightarrow 2NaOH + Ni(OH)_2$$

results in the removal of the Na_2O component by leaching without disturbing the external shape of the crystals. Probably during this process single crystals of sodium nickelite convert to polycrystalline nickel hydroxide (containing physically trapped water).

APPENDIX B

THE EFFECT OF HYDROGEN UPON MASS TRANSFER AND NICKELITE CONCENTRATION

Experiments were conducted to show the simultaneous dependence of sodium nickelite concentration and rate of mass transfer upon the hydrogen pressure in nickel capsules containing sodium hydroxide. A more complete study of the rate of formation of sodium nickelite is presented in appendix C.

Method 1

Four standard "L" nickel crucibles containing weighed nickel specimens (1/16 in. thick and 5/16 in. in diam.) and sodium hydroxide (13.0±0.1 g) were prepared and sealed in the usual manner for standard capsule tests (appendix A and ref. 2). They were incased in Inconel chambers (fig. 2). The chambers were evacuated to a pressure of 5 microns of mercury and then connected to a supply of hydrogen at a constant pressure of 17 inches of mercury. The temperature of the crucibles was raised to 1500° F by means of a special Globar furnace (ref. 2). This furnace by supplying heat from the bottom maintained an 80° F difference between the bottom of the Inconel chambers and a position $2\frac{1}{2}$ inches from the bottom (the sodium hydroxide liquid level). The pressure of hydrogen inside the nickel crucibles was also 17 inches of mercury because of the permeability of nickel toward hydrogen. After 80 hours at temperature the crucibles were cooled and were radiographed to detect the amount of transfer. The amount of sodium nickelite was determined as nickel plus two, and the specimens were reweighed (table VI). The experiment was repeated with crucibles having no added hydrogen in the chambers. Even though no hydrogen was added to these control crucibles, a steady-state hydrogen pressure of about 4 millimeters of mercury was present (ref. 7). The steady-state pressure arises in a sealed container from the fact that hydrogen is generated by the reaction of nickel with sodium hydroxide and that hydrogen is lost by diffusion through the walls of the nickel container. The rates of these two processes become equal when a certain steady-state hydrogen pressure is reached.

As is obvious from the data of table VI, the added hydrogen simultaneously inhibited the formation of the nickelite and the rate of mass transfer.

Method 2

Tests were also run in which hydrogen was introduced directly into the hot zone (bottom of the crucible) (fig. 3). These tests again showed

that added hydrogen simultaneously inhibited the formation of sodium nickelite and the rate of mass transfer.

Method 3

The third method was designed to determine whether inhibiting the loss of hydrogen normally formed in a crucible would likewise inhibit transfer. This was accomplished by placing a shell of Inconel around a standard nickel crucible (fig. 1(b)), inasmuch as the rate of diffusion of hydrogen through Inconel is much less than through nickel.

The internal and external dimensions of the modified crucibles were as close as practicable to those of a standard one (fig. 1(a)). Two standard crucibles were used for comparison (appendix A and ref. 2). Two Inconel-covered crucibles were prepared by first treating the inner nickel crucibles in essentially normal fashion. The top plugs were hammered into placed in a dry box and then welded to seal the crucibles. The Inconel shells were then assembled around the nickel and welded together. These four crucibles were heated at 1560° F (in the Globar furnace) for 24 hours; after this the crucibles were radiographed and the contents were chemically analyzed (table VI).

The Inconel shell inhibited transfer as expected. Reduction of the rate of formation of the nickelite was also detectable and was attributed to an increased hydrogen pressure caused by the decreased loss of hydrogen by diffusion.

APPENDIX C

RATE OF FORMATION OF SODIUM NICKELITE

A study was made to determine the rate of formation of sodium nickelite according to the equation

$$Ni + 2NaOH \rightarrow Na_2NiO_2 + H_2$$

If the reaction does not reach equilibrium in a reasonable time, the mechanism of mass transfer involving hydrogen as the "redox" material (table I, reaction (6)) is impossible.

Procedure

Standard test nickel crucibles (fig. 1(a)) containing 13.0±0.1 gram of sodium hydroxide were prepared (purged and crimped) in the usual manner (appendix A). They were in turn suspended in an Inconel tube by means of a long Nichrome loop spotwelded to the crimp of the nickel crucible (fig. 4). The top of the loop was placed over a nickel plunger, which could be pulled out from under the loop by means of a magnet outside the vacuum system. Brass caps were soft soldered to the top and bottom of the Inconel tube so that the system could be evacuated. After evacuation, hydrogen gas was admitted and controlled at the desired pressure. The temperature was then raised as quickly as possible to 1500° F (±4° F). The temperature measurements along the outside of the Inconel tube showed that a temperature difference of at most 3° F existed between the top and the bottom of the molten sodium hydroxide. At the end of a run a magnetic field was applied to the plunger so that the nickel crucible was allowed to fall to the bottom of the Inconel tube. The nickel crucible was thereby rapidly cooled. The experiment was repeated for various times and various hydrogen pressures (table VII). After each run the crucible was cut open and its contents were analyzed for oxidized nickel (fig. 5 and table VII).

Kinetics

The sodium nickelite concentration appears to be a linear function of time (fig. 5) and to be independent of hydrogen pressures above 26 inches of mercury. The results, although scattered, indicate the rate of formation to be greater for lower pressures. The data for steady-state hydrogen pressure conditions (37.5 mg/24 hr (appendix D)) confirm

this fact. To express this effect analytically, one must use a kinetic equation for reactions in which surfaces are easily poisoned (in this case by hydrogen):

$$r_{form} = k_1 + k_2/(P_{H_2})^n$$

where r_{form} is the rate of formation of sodium nickelite, k_1, k_2, and n are constants, and P_{H_2} is the hydrogen pressure. Since r_{form} is is equal to k_1 at high pressure, $k_1 = 64$ $(mg/dm^2)/yr$ (area = 0.267 dm^2). The values for the other constants are $n = 1.4$ and $k_2 = 360$ $[g(mm\ of\ Hg)^{1.4}/dm^2]/yr$. The kinetics are obviously independent of the reverse reaction.

Conclusions

Since the rate of the reaction under discussion is linear with time, the reaction itself never reaches equilibrium under the experimental conditions (at 1500° F, for times up to 600 hr, and with hydrogen pressures between 0.16 and 81 in. Hg). It follows that the mechanism of mass transfer cannot involve hydrogen as the "redox" material.

APPENDIX D

REACTIONS OF CHROMIUM AND ITS COMPOUNDS WITH MOLTEN SODIUM HYDROXIDE

An investigation was made to determine the chemical differences between the sodium chromites (or chromates) produced from the following three reactions:

$$Cr + NaOH \xrightarrow{1500^\circ\ F}$$

$$Cr_2O_3 + NaOH \xrightarrow{1500^\circ\ F}$$

$$Na_2CrO_4 + NaOH \xrightarrow{1500^\circ\ F}$$

4314

This work was initiated because chromium metal was reported to be an inhibitor of mass transfer, while chromium sesquioxide and sodium chromate were originally interpreted to be detrimental as additives (ref. 2).

Procedure

Standard static crucible corrosion (mass transfer) tests (appendixes A and B and ref. 2) were performed using chromium (325 mesh), chromium sesquioxide (Cr_2O_3), and sodium chromate (Na_2CrO_4) as additives in the sodium hydroxide - nickel system. These additives were added before purging. In order to accomplish a more thorough investigation, certain variations in the procedure were used for each group of crucibles, as indicated in the footnotes of table VIII.

Chromium Metal

The ratio of chromate concentration [Cr^{+6}] to chromite concentration [Cr^{+3}] as found in water solutions is approximately 1 to 2 (table VIII, group I, column 6), being independent of the percentage of chromium metal used (column 3) and independent of time for relatively long periods (column 5). The composition is essentially uniform throughout the crucibles (table VIII, footnote (b)). For periods of time less than 1 hour, Cr^{+3} alone existed (group II). Group III results indicate that this apparent 1-to-2 ratio for [Cr^{+6}] to [Cr^{+3}] does not depend upon the steady-state hydrogen pressure that is present in closed (sealed) systems (ref. 7). These facts perhaps indicate the presence of Cr^{+4} in the sodium hydroxide.

Since, however, this $[Cr^{+6}]$ to $[Cr^{+3}]$ ratio depends upon temperature (table VIII, group IV), the 1-to-2 ratio must be only approximate, and thus the existence of Cr^{+4} is highly doubtful. For further discussion see appendix E.

The reaction forming the hypothetical Cr^{+4} is fast enough so that any hydrogen so produced is quickly lost (by diffusion), and is thus prevented from inhibiting significantly the production of sodium nickelite (table VIII, column 7).

Chromium Sesquioxide

The results with chromium sesquioxide (table VIII, group V) show that it is an inhibitor of transfer. This is indicated by comparison of the specimen weight changes (column 8) and was substantiated by the decrease in the rate of transfer apparent in radiographs of the crucibles (not shown). Chromium sesquioxide is not benefical in dynamic tests. During the process the chromium converts slowly from Cr^{+3} to the Cr^{+6} as found in the water solution, but the reaction apparently stops when it is two-thirds complete. This perhaps indicates the presence of Cr^{+5}. The hydrogen produced from the oxidation of the chromium sesquioxide keeps the sodium nickelite concentration low (table VIII, column 7). The magnitude of this phenomenon depends upon the actual percent of chromium sesquioxide used. It seems possible that the Cr_2O_3 inhibits transfer by this property of keeping the nickelite concentration low (thus working in a different manner than chromium metal).

Group VI results (table VIII) compare the three additives used. These results confirm the previous data (groups I to V). The tests with sodium chromate indicate that the chromium converts to essentially the same oxidation state as it does in the chromium sesquioxide (table VIII, column 7). This results in the oxidation of metallic nickel (table VIII, footnote (f)).

Summary

The following equations summarize the information obtained:

(1) $$Cr + 3NaOH \xrightarrow{\text{Very fast}} Na_3CrO_3 + \frac{3}{2} H_2;$$

$$Na_3CrO_3 + NaOH \xrightarrow[\text{fast}]{\text{Moderately}} Cr^{+4,\ +5,\ \text{or}\ +6} + H_2$$

(2) $Cr_2O_3 + 2NaOH \rightarrow 2NaCrO_2 + H_2O$; $NaCrO_2 + 2NaOH \xrightarrow{\text{Slow}} Na_3CrO_4 + H_2$;

$$Ni + 2NaOH \xrightarrow[\text{pressures}]{\text{Inhibited by hydrogen}} Na_2NiO_2 + H_2$$

(3) $2Na_2CrO_4 + Ni + 2NaOH \rightarrow 2Na_3CrO_4 + H_2O + NiO$

See appendix E for further discussion of chromium metal.

APPENDIX E

CHROMATE-CHROMITE EQUILIBRIUM IN MOLTEN SODIUM HYDROXIDE

A study was made concerning the equilibrium between the valences of chromium formed when the metal reacts with molten sodium hydroxide at 1500° F. It was hoped that such an investigation might uniquely define the valences of chromium.

Procedure

Standard static-test nickel crucibles containing sodium hydroxide (13.0±0.1 gram) and various amounts of chromium metal (325 mesh) were prepared in the usual manner (appendix A and ref. 2). They were then heated in a hydrogen atmosphere at 1500° F and quenched in the manner described in appendix C. After each crucible was opened, its content was immediately acidified with dilute sulfuric acid. Then the water phase was analyzed for Cr^{+3} and Cr^{+6} (table IX, columns 4 and 5). The insoluble material was assumed to contain only Cr^{+3}.

Equilibrium

Proof that equilibrium was actually reached is the fact that the "equilibrium constants" subsequently calculated are independent of test duration (table IX, column 3).

The equilibrium between the lower and higher oxidation states of chromium as it exists in molten sodium hydroxide (not necessarily, as it exists in water) is expressible by the general equation

$$K_1 = \frac{\left[Cr^{+y}\right] \cdot P_{H_2}^{\frac{y-x}{2}}}{\left[Cr^{+x}\right]}$$

where K_1 is the equilibrium constant. Since in fact the value of $P_{H_2}[Cr^{+6}]/[\text{total Cr}]$ is essentially constant (table IX, column 6), one must conclude that +3 and +5 must be the valences present ($[Cr^{+5}]$ being proportional to $[Cr^{+6}]$; $[Cr^{+3}]$ being essentially equal to [total Cr]; and the dependence upon P_{H_2} being the first power). This selection is not

unambiguous if chromium can exist as a dimer. Since the equilibrium constant for this case K_2 can be expressed

$$K_2 = \frac{\left[Cr_2^{+2y}\right] P_{H_2}^{y-x}}{\left[Cr_2^{+2x}\right]}$$

the valences would be +3 and +4. The valences +3 and +5 are, however, the simpler explanation, being in agreement with the work in which chromium sesquioxide is oxidized to Cr^{+5} (appendix D). Furthermore, since chromium's apparent valence at 1700° F is +4.1 (appendix D), some pentavalent chromium must be present.

Complex Formation

When a compound containing Cr^{+5} is dissolved in water and acidified, the following disproportionation reaction should occur:

$$6Na_5CrO_5 + 29H_2SO_4 \rightarrow Cr_2(SO_4)_3 + 2Na_2Cr_2O_7 + 26NaHSO_4 + 16H_2O$$

If all the resulting chromium compounds are water soluble, one would expect [soluble Cr^{+3}]/[Cr^{+6}] to equal 0.5, not 3.3 (table IX, column 7). A value of 3.5 (almost 3.3) to 1 for this ratio is understandable, if the Cr^{+5} is assumed to be coordinated with Cr^{+3} according to the first formula in the equation

$$6Na_5CrO_5(Na_3CrO_3)_2 + 83H_2SO_4 \rightarrow 7Cr_2(SO_4)_3 + 2Na_2Cr_2O_7 + 62NaHSO_4 + 52H_2O$$

Under conditions of low and varying hydrogen pressure (unsealed systems) one chromite (Cr^{+3}) probably coordinates with one hypochromate, as indicated by the apparent +4 valence (appendix D and table VIII, group III). This coordination changes with temperature, as indicated by the apparent valence of +4.1 at 1700° F (appendix D).

APPENDIX F

EQUILIBRIUM CONCENTRATION OF SODIUM OXIDE IN SODIUM HYDROXIDE

The equilibrium constant for the reaction

$$2NaOH\ (liquid) \rightleftharpoons Na_2O(solid) + H_2O(gas)$$

was calculated from thermodynamic data (table X and refs. 13 and 14). It was found to be $10^{-3.96}$ atmosphere at 822° C. Since the partial pressure of water over sodium hydroxide is about 3 millimeters of mercury at 822° C (ref. 7), the molar concentration of sodium oxide must be about 2.7 percent. This is in general agreement with recent experimental work (ref. 10). This concentration seems more than sufficient for the oxide to take part in the chemical reactions involved in mass transfer.

The molar concentration of water must also be 2.7 percent, since very little water is in the vapor state (because of the low vapor pressure). This low pressure is indicated indirectly in static crucible tests using flowing atmospheres (appendix D and ref. 3). If pressures larger than several millimeters of mercury existed, large quantities of water would be removed, and the sodium oxide concentration and mass transfer would thus be increased.

If one disregards the experimental evidence and assumes all the water formed from the dissociation to be contained in the free space (10 ml in a standard crucible), the molar concentration of sodium oxide would still be sufficient (0.02 percent) to take part in mass transfer. The resulting water pressure (400 mm Hg) would be, of course, in gross disagreement with the facts.

APPENDIX G

CORROSION AND MASS TRANSFER IN SODIUM HYDROXIDE - COPPER SYSTEM

In order to compare the mechanism of transfer in nickel with that in another metal, the sodium hydroxide - copper system was investigated.

Procedure

Static corrosion tests in which copper crucibles were exposed to air for 24 hours resulted in excess oxidation and leaking. Therefore, static-capsule corrosion tests were performed with the copper crucibles protected from oxidation by being incased in Inconel chambers (fig. 2).

Four crucibles were fabricated from copper tubing in the same manner as the "L" nickel crucibles (appendix A and ref. 2). In three out of four cases during the 1500° F test, leaks occurred at the lower weld (below the sodium hydroxide level). Subsequent capsules were therefore fabricated from a single bar of copper to the same dimensions as the standard nickel crucibles. The specimens and tops were machined from the same bar stock, while the vent tubes were made from tubing in the usual manner. The loading and purging procedure was identical to that used for nickel crucibles. The conditions of the test were the same as those for method 1 in appendix B except that the Inconel chambers were continually evacuated. Nickel crucibles were used for comparison. After the crucibles were radiographed, the melts were analyzed chemically, and the weight losses of the specimens were determined (table XI).

Presence of Sodium

Several days after the test, a white alkaline coating was detected around the crimp on some unopened copper crucibles (table XI, column 5). This phenomenon was interpreted as being due to the formation of metallic sodium in the melt and its diffusion through the copper metal at high temperature followed at room temperature by its reaction with the components of the air to form sodium carbonate. Photomicrographs of the crimped sections indicated that some foreign material had vaporized from the surface of the copper.

Furthermore, the extremely large weight losses of the copper crucibles (table XI, column 6) can be attributed only to the loss of metallic sodium. Radiographs of the copper crucibles show this loss of sodium hydroxide. Unfortunately the contents were not analyzed for sodium hydroxide. All this evidence indicates a reaction for copper

$$Cu + 2Na_2O \rightarrow Na_2CuO_2 + 2Na$$

which is similar to that for nickel.

Effect of Chromium

Radiographs (not shown) and the specimen weight changes (table XI, column 7) indicate that chromium is an inhibitor of transfer in the sodium hydroxide - copper system, as could be predicted from the proposed mechanism. However, another factor has to be considered here. The pressure of hydrogen generated by the chromium reaction is not easily eliminated, since copper is less permeable to hydrogen than is nickel. The resulting hydrogen pressure inhibits the chromite-to-chromate reaction (column 8) as well as the copper-to-cuprate reaction (column 9). This accounts for some of the effectiveness of the chromium in copper but not for that in nickel.

4314

Comparison of Transfer of Copper and Nickel

Radiographs of crucibles show little difference in the actual amount of transfer for copper and nickel. The fact that the specimens have relatively large weight losses is attributable to the large amount of copper (from the specimens as well as the crucibles) which reacts with sodium oxide to form metallic sodium and the sodium cuprate. It is the side reactions of copper (oxidation, sodium diffusion, and fast rate of reaction with sodium hydroxide) which make it a far less favorable container material for molten caustic than nickel.

CH-5

APPENDIX H

THERMOELECTRICAL POTENTIAL OF NICKEL IN MOLTEN SODIUM HYDROXIDE

This section describes the thermoelectrical potential and current found to exist in the sodium hydroxide - nickel system and presents a tentative explanation for them.

4314

Apparatus

Although many types of apparatus were used (most of which had about the same degree of success and reproducibility), only the final apparatus is described here (fig. 6). The outside container was fabricated from Inconel and made vacuum tight by means of a water-cooled O-ring seal between the two brass plates on top. The cup inside (containing NaOH) and the electrodes were fabricated from "L" nickel tubing. The electrodes were vacuum sealed to the system by means of rubber tubing and electrically insulated from the Inconel supports by means of ceramic tubes. Heating was accomplished by means of ceramic-covered Nichrome heating wire wound around the Inconel container. Several layers of asbestos supplied sufficient heat insulation. The temperature was manually controlled through a Variac and measured by thermocouples contacting the tips of the electrodes.

Thermoelectrical Potential

While the temperature of the vessel and one electrode was held constant, the second electrode was cooled by passing a stream of air through it. The temperature difference between the two electrodes was measured as well as the electrical potential existing between them. Generally, the results were very scattered, although the hotter electrode was always negative with respect to the cooler electrode. Occasionally, the scatter was low (fig. 7).

Values for electromotive force divided by the temperature difference ($emf/\Delta T$) for many trials ranged from 10 to 120 microvolts per degree. These values were essentially independent of whether a vacuum or a helium atmosphere was present above the sodium hydroxide. However, when a hydrogen pressure was used, the sign of $emf/\Delta T$ was reversed (i.e., the cooler electrode became negative with respect to the hotter one). Upon removal of the hydrogen pressure the original polarity was restored.

4314

CH-5 back

Thermoelectrical Current

An experiment was also carried out to see whether this thermoelectrical potential could sustain an electric current. The hot and cold electrodes were connected through a low resistance (2 ohms), and the potential drop across it was measured over a period of 6 hours. The current was quite unsteady.

Interpretation

The measured potential could be due to the Seebeck effect or to one of the following half-cell reactions:

$$Na_2NiO_2 + 2Na^+ + 2e^- \underset{\text{Hot zone}}{\overset{\text{Cold zone}}{\rightleftharpoons}} 2Na_2O + Ni$$

$$2H_2O + 2e^- \underset{\text{Hot zone}}{\overset{\text{Cold zone}}{\rightleftharpoons}} 2OH^- + H_2$$

$$NaOH + e^- \underset{\text{Hot zone}}{\overset{\text{Cold zone}}{\rightleftharpoons}} OH^- + Na$$

$$Na^+ + NaNiO_2 + e^- \underset{\text{Hot zone}}{\overset{\text{Cold zone}}{\rightleftharpoons}} Na_2NiO_2$$

The Seebeck (thermocouple) effect is not likely for the following reasons: Sodium hydroxide is probably a poor electronic conductor, and the effect of hydrogen is far too great for the potential to be due to simple thermocouple action. The effect of the hydrogen upon the thermoelectrical potential is even difficult to explain in terms of any of the thermocell reactions listed. The presence of hydrogen should in all cases (by reducing the ratio of products to reactants) increase $emf/\Delta T$ (not decrease it past zero as is found experimentally) inasmuch as the value of $emf/\Delta T$ is determined by the equation (ref. 15)

$$n\mathcal{F}\frac{emf}{\Delta T} = \Delta S^o - R \ln\left(\frac{[\text{products}]}{[\text{reactants}]}\right)$$

where n is the number of electrons shown in the half-cell reaction, $\mathcal{F}$ is the Faraday conversion factor, and ΔS^o is the standard entropy change for the reaction as written for the hot zone. The only reasonable way to explain the effect is to assume that the thermoelectric potential is produced by the nickel-nickelite reaction with the hydrogen poisoning the nickel. In appendix C another case is presented in which hydrogen apparently poisons nickel in the sodium hydroxide system.

REFERENCES

1. Mosher, Don R., and Lad, Robert A.: Kinetic Study of Mass Transfer by Sodium Hydroxide in Nickel Under Free-Convection Conditions. NACA RM E53K24, 1954.

2. Forestieri, Americo F.: Effects of Additives on Corrosion and Mass Transfer in Sodium Hydroxide - Nickel Systems Under Free-Convection Conditions. NACA RM E54E19, 1954.

3. Lad, Robert A., and Simon, Sidney L.: A Study of Corrosion and Mass Transfer of Nickel by Molten Sodium Hydroxide. Corrosion, vol. 10, no. 12, Dec. 1954, pp. 435-439.

4. Le Blanc, M., and Bergmann, L. (A. Pingell, trans.): The Effect of Metals on Molten Sodium Hydroxide. Trans. 393, Naval Res. Lab., 1952.

5. Manly, W. D.: Fundamentals of Liquid-Metal Corrosion. ORNL-2055, Metallurgy Div., Oak Ridge Nat. Lab. (Contract W-7405-eng-26.)

6. Smith, G. P.: Corrosion of Materials in Fused Hydroxides. ORNL-2048, Metallurgy Div., Oak Ridge Nat. Lab., Mar. 27, 1956. (Contract W-7405-eng-26.)

7. Williams, Dale D., and Miller, R. R.: Thermal and Related Physical Properties of Molten Materials. Pt. II - High Temperature Reactions of Sodium Hydroxide. WADC Tech. Rep. 54-185, Wright Air Dev. Center, Wright-Patterson Air Force Base, Feb. 1955. (MIPR No. 33(616)-54-102, Proj. No. 1252.)

8. Peoples, Robert S., Miller, Paul D., and Hannan, H. Dale: Reaction of Nickel in Molten Sodium Hydroxide. Rep. No. BMI-1041, Battelle Memorial Inst., Sept. 27, 1955. (Contract W-7405-eng-92.)

9. Anon.: High-Temperature Chemistry of Fused Substances. Prog. Rep., College of Arts and Sci., Univ. Ark., Nov. 1, 1954. (Subcontract 501, W-7405-eng-26.)

10. Smith, G. P.: Problems Pertaining to the Dehydration of Sodium Hydroxide by Volatization of Water. ORNL-2130, Metallurgy Div., Oak Ridge Nat. Lab., Sept. 10, 1956. (Contract W-7405-eng-26.)

11. Simons, Eugene M., Miller, Neil E., Stang, John H., and Weaver, C. Vernon: Corrosion and Component Studies on Systems Containing Fused NaOH. Rep. No. BMI-1118, Battelle Memorial Inst., July 30, 1956. (Contract W-7405-eng-92.)

4314

12. Smothers, W. J.: Progress Report Jan. 1, 1953-Mar. 31, 1953. Inst. Sci. and Tech., Univ. Ark., Apr. 20, 1953. (Subcontract 501-Under W-7405-eng-26.)

13. Kubaschewski, O., and Evans, E. L.: Metallurgical Thermochemistry. Vol. I. Academic Press, Inc., 1951, pp. 274-275; 291.

14. Powers, W. D., and Blalock, G. C.: Enthalpies and Specific Heats of Alkali and Alkaline Earth Hydroxides at High Temperatures. ORNL-1653, Reactor Exp. Eng. Div., Oak Ridge Nat. Lab., Jan. 20, 1954. (Contract W-7405-eng-26.)

15. Eastman, E. D.: Thermodynamics of Non-Isothermal Systems. Jour. Am. Chem. Soc., vol. 48, June 1926, pp. 1482-1493.

TABLE I. - PROPOSED MECHANISMS

Type of reaction	Reaction	Migration processes	Additional reactions required for initiation
Physical	(1) $Ni^0(\text{dissolved}) \underset{\text{Hot zone}}{\overset{\text{Cold zone}}{\rightleftharpoons}} Ni^0(\text{metal})$	$Ni^0(\text{hot}) \rightarrow (\text{cold})$	None
Electrochemical	(2) $Na_2NiO_2 + 2Na^+ + 2e^- \underset{\text{Hot zone}}{\overset{\text{Cold zone}}{\rightleftharpoons}} 2Na_2O + Ni$	$Na_2NiO_2(\text{hot}) \rightarrow (\text{cold})$ $Na^+(\text{hot}) \rightarrow (\text{cold})$ $e^-(\text{hot}) \rightarrow (\text{cold})$ $Na_2O(\text{cold}) \rightarrow (\text{hot})$	$2NaOH \rightarrow Na_2O + H_2O$
Chemical	$Na_2NiO_2 + \text{Reductant} \underset{\text{Hot zone}}{\overset{\text{Cold zone}}{\rightleftharpoons}} \text{Oxidant} + Ni$		
Impurity	(3) $Na_2NiO_2 + 2Na_2FeO_2 \underset{\text{Hot zone}}{\overset{\text{Cold zone}}{\rightleftharpoons}} 2Na_3FeO_3 + Ni$	$Na_2NiO_2(\text{hot}) \rightarrow (\text{cold})$ $Na_2FeO_2(\text{hot}) \rightarrow (\text{cold})$ $Na_3FeO_3(\text{cold}) \rightarrow (\text{hot})$	None
Disproportionation	(4) $3Na_2NiO_2 \underset{\text{Hot zone}}{\overset{\text{Cold zone}}{\rightleftharpoons}} 2Na_3NiO_3 + Ni$	$Na_2NiO_2(\text{hot}) \rightarrow (\text{cold})$ $Na_3NiO_3(\text{cold}) \rightarrow (\text{hot})$	$Ni + 2NaOH \rightarrow Na_2NiO_2 + H_2$
Element present in sodium hydroxide Oxygen	(5) $Na_2NiO_2 \underset{\text{Hot zone}}{\overset{\text{Cold zone}}{\rightleftharpoons}} Na_2O + \frac{1}{2} O_2 + Ni$	$Na_2NiO_2(\text{hot}) \rightarrow (\text{cold})$ $Na_2O(\text{cold}) \rightarrow (\text{hot})$ $O_2(\text{cold}) \rightarrow (\text{hot})$	$Ni + 2NaOH \rightarrow Na_2NiO_2 + H_2$
Hydrogen	(6) $Na_2NiO_2 + H_2 \underset{\text{Hot zone}}{\overset{\text{Cold zone}}{\rightleftharpoons}} 2NaOH + Ni$	$Na_2NiO_2(\text{hot}) \rightarrow (\text{cold})$ $H_2(\text{hot}) \rightarrow (\text{cold})$ $NaOH(\text{cold}) \rightarrow (\text{hot})$	None
Sodium	(7) $Na_2NiO_2 + 2Na \underset{\text{Hot zone}}{\overset{\text{Cold zone}}{\rightleftharpoons}} 2Na_2O + Ni$	$Na_2NiO_2(\text{hot}) \rightarrow (\text{cold})$ $Na(\text{hot}) \rightarrow (\text{cold})$ $Na_2O(\text{cold}) \rightarrow (\text{hot})$	$2NaOH \rightarrow Na_2O + H_2O$

TABLE II. - ANALYSIS OF SODIUM HYDROXIDE

PELLETS

[Ref. 2.]

Material	Percent
Sodium hydroxide	97.6
Chloride (Cl)	.005
Iron (Fe)	.001
Other heavy metals (as Ag)	0
Carbonate (Na_2CO_3)	.32
Phosphate	0
Silica and ammonium hydroxide precipitate	0
Total nitrogen (as NH_3, NO_2)	.001
Sulfate (SO_4)	0

TABLE III. - COMPOSITION OF "L"

NICKEL TUBING

[Ref. 2.]

Material	Percent
Manganese	0.149±0.015
Iron	.059±.006
Copper	.029±.006
Carbon	.024±.005
Silicon	.020±.002
Sulfur	.008±.001
Cobalt	.119±.013
Nickel	Balance

TABLE IV. - EFFECT UPON TRANSFER OF INCREASING IMPURITY CONTENT

[Refs. 2, 3, and 11.]

	Specimen weight change for various percents of added impurities, mg			
	0 percent	1 percent	3 percent	5 percent
Nickel impurities				
Manganese	-4.7	-20.0	-----	-----
Iron	-5.1	-25.7	-28.4	-28.1
Copper	-5.1	-8.4	-6.7	-5.8
Carbon	-7.9	-78.6	-8.5	-7.8
Silicon (see sodium silicate below)	----	-----	-----	-----
Sulfur (see sodium sulfate below)	----	-----	-----	-----
Cobalt	-5.1	+0.6	+7.2	+8.2
Sodium hydroxide impurities				
Sodium chloride	-7.9	-6.5	-6.6	-----
Iron oxide	-5.1	-9.2	-11.1	-4.8
Silver metal	-5.1	-6.0	-4.8	-5.1
Sodium carbonate	-7.9	-17.5	-19.3	-22.0
Sodium phosphate	-5.1	-5.4	-5.2	-8.6
Sodium silicate	[a]-7	[a]-11	-----	-----
Nickel nitrate	[a]-7	[a]-11	-----	-----
Sodium sulfate	[a]-7	[a]-11	-----	-----

[a]Approximate (ref. 11).

4314

CE-6

TABLE V. - X-RAY DIFFRACTION DATA FOR SODIUM NICKELITE

Interatomic distances, d, Å	Intensity of line	d values from ref. 9 (Oak Ridge), Å	d values from ref. 9 (University of Arkansas), Å	d values from ref. 7, Å
8.48	Medium	----	----	----
----	------	----	----	4.87
4.35	Strong	4.32	4.37	4.33
4.17	Strong	----	----	4.17
----	------	----	----	3.67
3.22	Weak	3.21	3.19	----
----	------	2.71	----	----
2.55	Medium	2.57	2.55	2.55
----	------	2.53	----	----
2.43	Strong	2.42	2.44	----
2.23	Weak	2.27	2.28	----
2.17	Weak	2.14	2.16	----
2.10	Weak	2.09	2.09	----
1.92	Weak	1.93	1.92	1.91
1.87	Weak	1.87	----	----
----	------	1.70	----	----
1.65	Weak	1.64	----	1.65
----	------	1.61	----	----
1.60	Weak	1.60	----	----
1.57	Weak	1.56	----	----
----	------	1.53	----	----
----	------	1.49	1.49	----
1.44	Medium	1.44	1.45	----
----	------	1.41	1.43	1.41
1.38	Weak	1.38	----	----
----	------	1.34	----	----
----	------	1.31	----	----
----	------	1.29	----	----
1.27	Weak	1.27	----	----
----	------	1.23	----	----
----	------	1.22	1.22	----

TABLE VI. - EFFECT OF HYDROGEN UPON MASS TRANSFER

Method	Total number of crucibles	Pressure of hydrogen, in. Hg	Temperature, °F	Time, hr	Specimen weight loss, mg	Amount Ni^{+2} in melt, mg	Appearance of transfer in radiograph
1	[a]4	0.16 (Steady state)	1500	80	4.3±0.7	11.4±1.9	Clearly visible
	4	17	1500	80	2.8±0.6	0.41±0.05	Hardly visible
3	[a]2	0.16 (Steady state)	1560	24	7.6±0.8	79.4±1.8	Clearly visible
	2	>0.16 (Slightly above steady state)	1560	24	4.6±0.3	8.3±0.1	Narrower band than in crucibles with steady-state hydrogen pressure

[a]Crucibles used for comparison.

4314

CE-6 back

TABLE VII. - KINETIC DATA FOR

SODIUM NICKELITE FORMATION

Time, hr	Ni^{+2} in melt, mg	Hydrogen pressure, in. Hg
615	1.40	81.0
303	.66	26.5
303	1.11	~16.0
284	.64	16.5
228	1.11	~15.0
184	.437	28.3
138	.343	28.3
89	.285	29.1
89	1.03	3.5
88	.21	38.4
87	.42	20.7
82	.25	38.7
63	.638	12.7
45	.167	70.6
43	.093	73.2
41	.115	37.6
40	.130	86.5
26	.080	60.0
22	.062	86.1
21	.218	20.7
19	.150	38.4
18	.175	28.9
14	.090	68.4
0	.100	----
0	.070	----

TABLE VIII. - CORROSION DATA WITH CHROMIUM, CHROMIUM SESQUIOXIDE, AND SODIUM CHROMATE AS ADDITIVES

1	2	3	4	5	6	7	8	9
Group of crucibles	Additive	Amount of additive, percent	Temperature, °F	Time, hr	Percent of Cr as Cr^{+6} (remainder was Cr^{+3})	Amount of Ni^{+2} in melt, g	Specimen weight change, mg	Average rate of specimen weight change, mg/hr
a,b,c I	Cr	2.5	1500	24	29.9 32.5 33.3			
		7.5		24	30.1 30.3 30.7			
		5		24	30.3			
		5.8		96	33.7			
		12		96	30.8			
		15		240	30.4			
		10		245	32.0 33.5 32.6			
a,b,c II	Cr	12	1500	0.33	0			
	Cr	(d)	1500	.5	0			
	Cr	12	1500	5	1.5			
c,e III	None	----	1500	24	----		-12.9	
	None	----			----		-10.5	
	Cr	3			33.3		+4.5	
	Cr	3			33.9		+4.5	
IV	None	----	1700	24	----	0.251	-32.3	
	Cr	3			35.9	.255	+7.0	
	Cr	5			36.1	.195	+9.0	
	None	----			----	.232	-30.5	
	Cr	1			35.3	.235	-7.0	
	Cr	3			36.8	.207	+7.0	
V	None	----	1500	24	----	0.0375	-5.9	-0.25
	Cr_2O_3	1			43	.01085	+2.8	
	Cr_2O_3	3.2			16	.01802	+2.6	
	Cr_2O_3	5			5.3	.0389	+2.1	
	None	----		96	----	.0830	-30.5	-.31
	Cr_2O_3	1			60	.05112	-24.1	
	Cr_2O_3	3			34	.0288	+3.8	
	Cr_2O_3	6.3			22	.0511	-5.5	
	None	----		168	----	.1135	-81.2	-.48
	Cr_2O_3	1			58	.0945	-79.6	
	Cr_2O_3	2			61	.0485	-11.4	
	Cr_2O_3	4.9			54	.0668	+.6	
	Cr_2O_3	1		240	57	.0914	-139.4	-.58
	Cr_2O_3	6.2		240	57	.0931	-74.6	
c VI	None	----	1500	67	----	0.0834		
	Cr	1			32.0	.1053		
	Cr	3			37.0	.0669		
	Cr	5			32.5	.0802		
	Cr_2O_3	1			63.0	.0375		
	Cr_2O_3	3			24.2	.0227		
	Cr_2O_3	5			15.5	.0285		
	Na_2CrO_4	3			66.1	(f)		
	None	----		71	----	.0748		
	Cr	1			42.8	.0780		
	Cr	3			37.2	.0772		
	Cr	5			33.2	.0784		
	Cr_2O_3	1			48.5	.0504		
	Cr_2O_3	3			24.6	.0244		
	Cr_2O_3	5			13.4	.0215		
	Na_2CrO_4	3			63.7	(f)		
	None	----	1700	18.5	----	.1591		
	Cr	3			39.8	.1640		
	Cr	3			38.2	.1859		
	Cr_2O_3	3			46.5	.0396		
	Cr_2O_3	5			28.0	.0423		

[a]These crucibles were cut into several sections; differences in analysis between sections were slight (column 6).

[b]No analysis was made for Ni^{+2}.

[c]No specimens.

[d]10 Percent 325 mesh plus 13 percent larger mesh.

[e]Flowing helium atmosphere over sodium hydroxide (ref. 3).

[f]Coating of oxide was found on inside surface of crucible.

TABLE IX. - CHROMITE-CHROMATE EQUILIBRIUM DATA

1	2	3	4	5	6	7
Total amount of chromium, g	Hydrogen pressure, P_{H_2}, in. Hg	Time, hr	Cr^{+6} in melt, g	Acid-soluble Cr^{+3} in melt, g	$P_{H_2}[Cr^{+6}]/[\text{total Cr}]$ in. Hg	$\frac{[\text{Soluble } Cr^{+3}]}{[Cr^{+6}]}$
0.1300	79.2	14	0.0015	0.0053	0.91	3.5
.1310	68.4	16	.0016	.0050	.84	3.1
.1298	28.3	16	.0026	.0083	.56	3.2
.1296	22.4	15	.0039	.0140	.67	2.8
.1304	14.8	32	.0070	.0177	.80	3.9
.1307	10.6	15	.0088	(a)	.71	---
.3900	69.2	18	.0046	.0135	.81	3.4
.3903	63.8	40	.0049	.0149	.80	3.3
.3899	60.1	65	.0055	.0175	.85	3.1
.3900	40.6	14	.0103	(a)	1.07	---
.3901	40.2	88	.0094	.0246	.97	3.8
.3900	17.5	14	.0163	.0447	.73	2.7
					Average 0.81	Average 3.3

[a]Not properly acidified.

TABLE X. - THERMODYNAMIC DATA FOR SODIUM HYDROXIDE, SODIUM OXIDE, AND WATER

[Refs. 13 and 14.]

	Heat of formation, ΔH_{form}, at 25° C, cal/mole	Entropy, S, at 25° C, cal/(mole)(°K)	Specific heat at constant pressure, c_p, cal/(mole)(°K)	Heat of transformation from alpha to beta, ΔH_{trans}, cal/mole	Heat of fusion, ΔH_{fusion}, cal/mole
Sodium hydroxide (α)(solid)	-102,000	14.2	17.6	1000	----
Sodium hydroxide (β)(solid)	--------	----	17.6	----	1900
Sodium hydroxide (liquid)	--------	----	19.6	----	----
Sodium oxide (solid)	-102,900	17.4	$15.9+5.4\times10^{-3}T$	----	----
Water (gas)	-57,800	45.11	$1.19+2.83\times10^{-3}T-0.16\times10^{-6}T^2$	----	----

TABLE XI. - CORROSION DATA FOR SODIUM HYDROXIDE - COPPER SYSTEM

1	2	3	4	5	6	7	8	9
Crucible material	Chromium, percent	Temperature, °F	Time, hr	Alkalinity of coating on crucible, mg NaOH	Crucible weight change, mg	Specimen weight change, mg	Amount of Cr as Cr^{+6}, percent	Amount of Cu^{+2} or Ni^{+2} in melt, g
Nickel tubing	None	1500	24	None	-4.4	-2.1	---	------
Nickel tubing	None	1500	24	None	-4.9	-3.5	---	------
Copper tubing	None	1500	24	60	------	-3.4	---	0.0569
Copper bar	None	1500	24	0.5	-45.9	-9.4	---	.0852
Copper bar	None	1500	24	.5	-25.6	-9.6	---	.0846
Copper bar	3	1500	24	-----	------	+5.2	4.4	0.0172
Copper bar	3	1500	24	-----	-945.3	+6.2	5.7	.0367
Nickel tubing	None	1500	80	None	+0.7	-8.1	---	0.0625
Copper bar	None	1500	80	15.8	-804.1	-28.5	---	.533
Copper bar	None	1500	80	4.8	-788.2	-33.7	---	.670

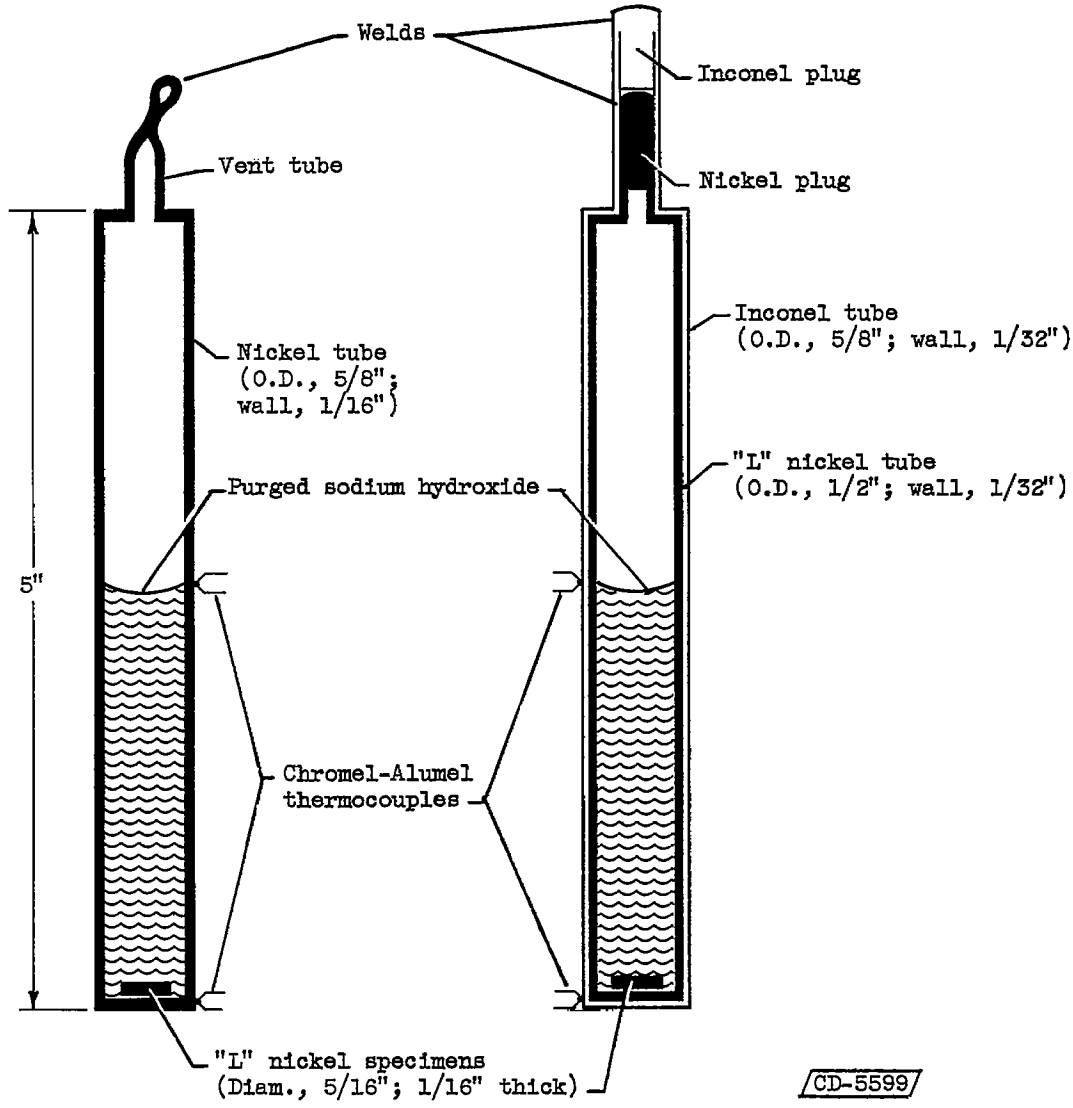

(a) Standard crucible. (b) Modified crucible.

Figure 1. - Comparison of standard crucible and crucible with Inconel shell.

4314

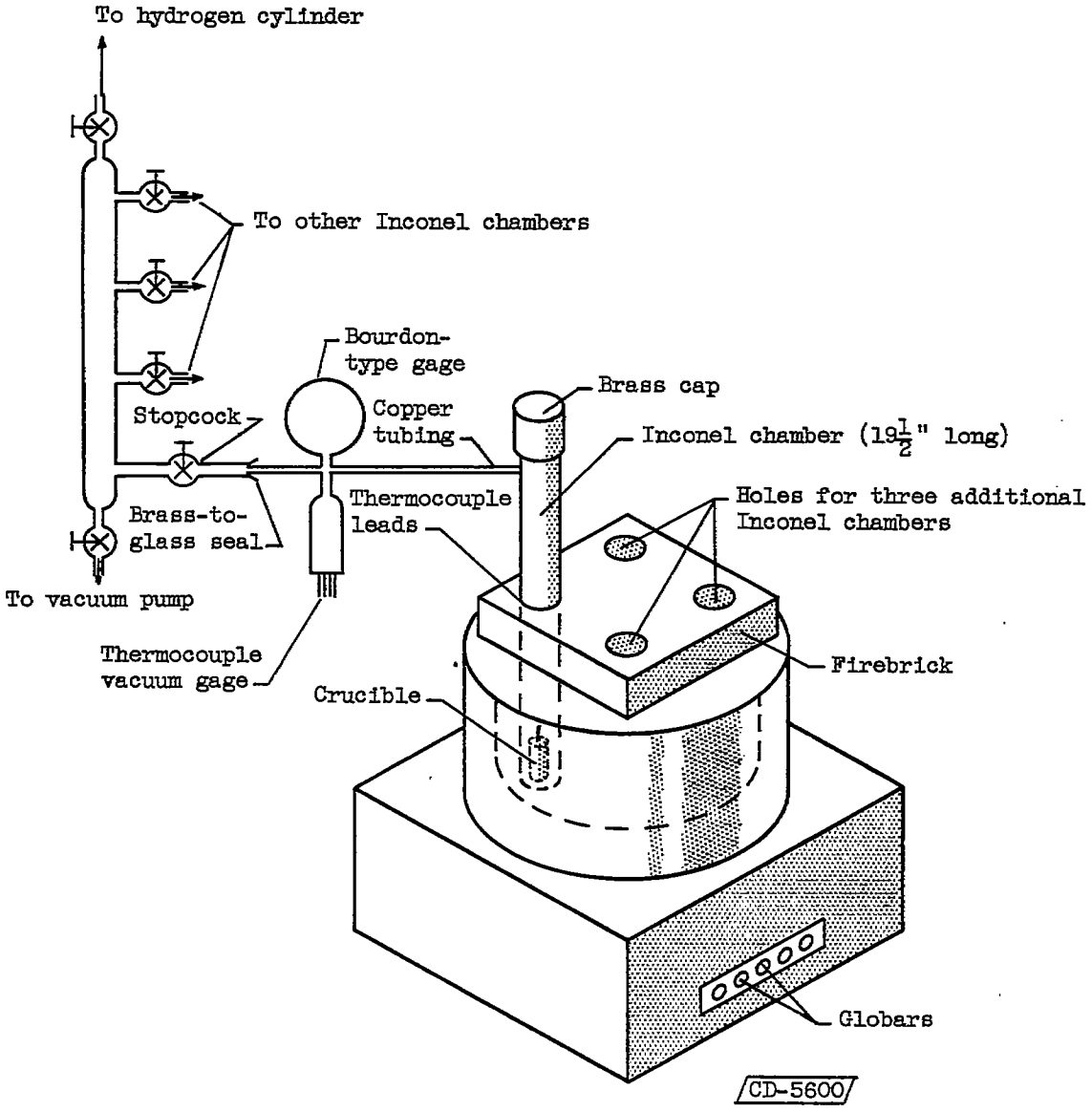

Figure 2. - Vacuum system and Inconel chamber.

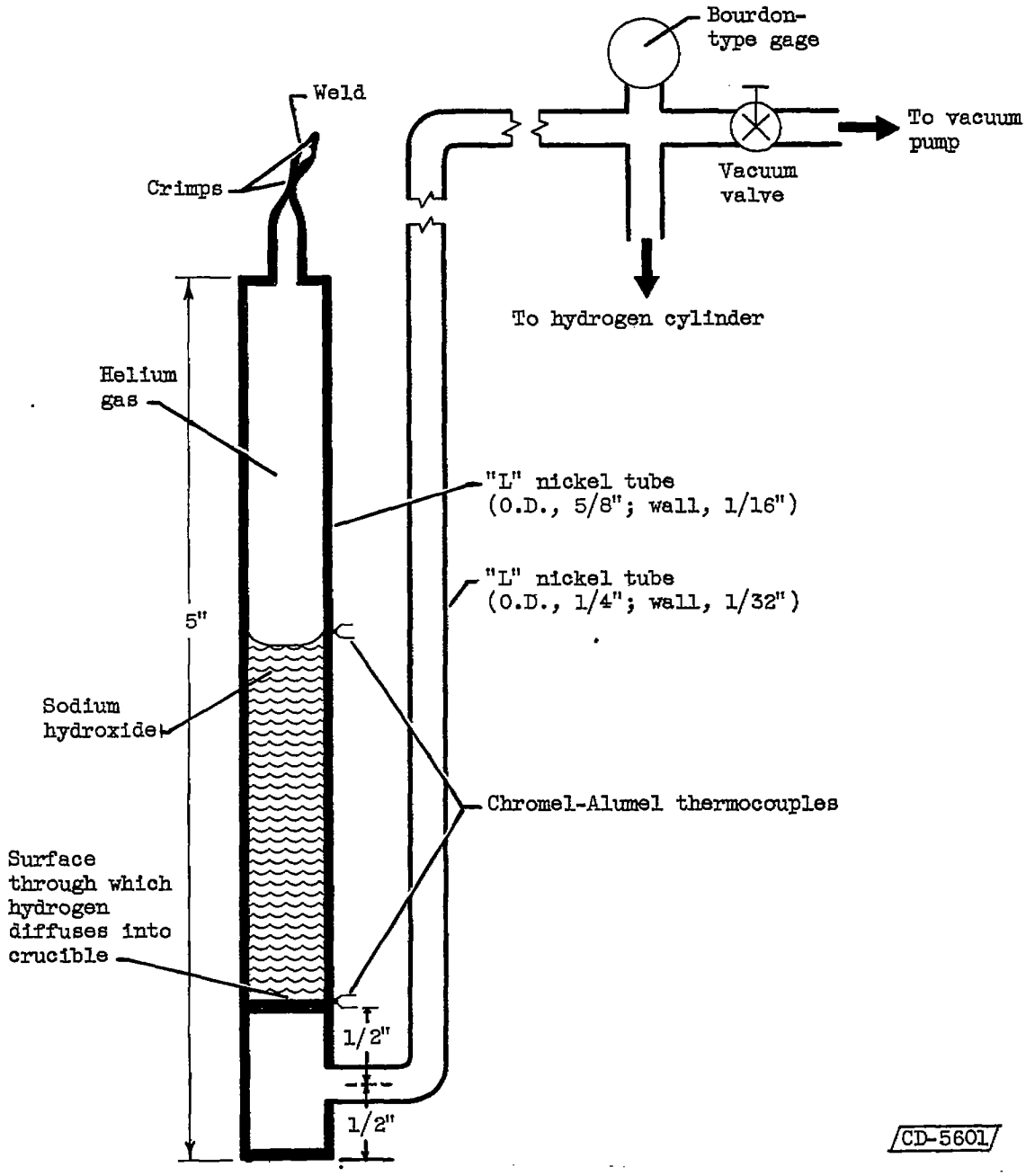

Figure 3. - Crucible for introduction of hydrogen at hot zone.

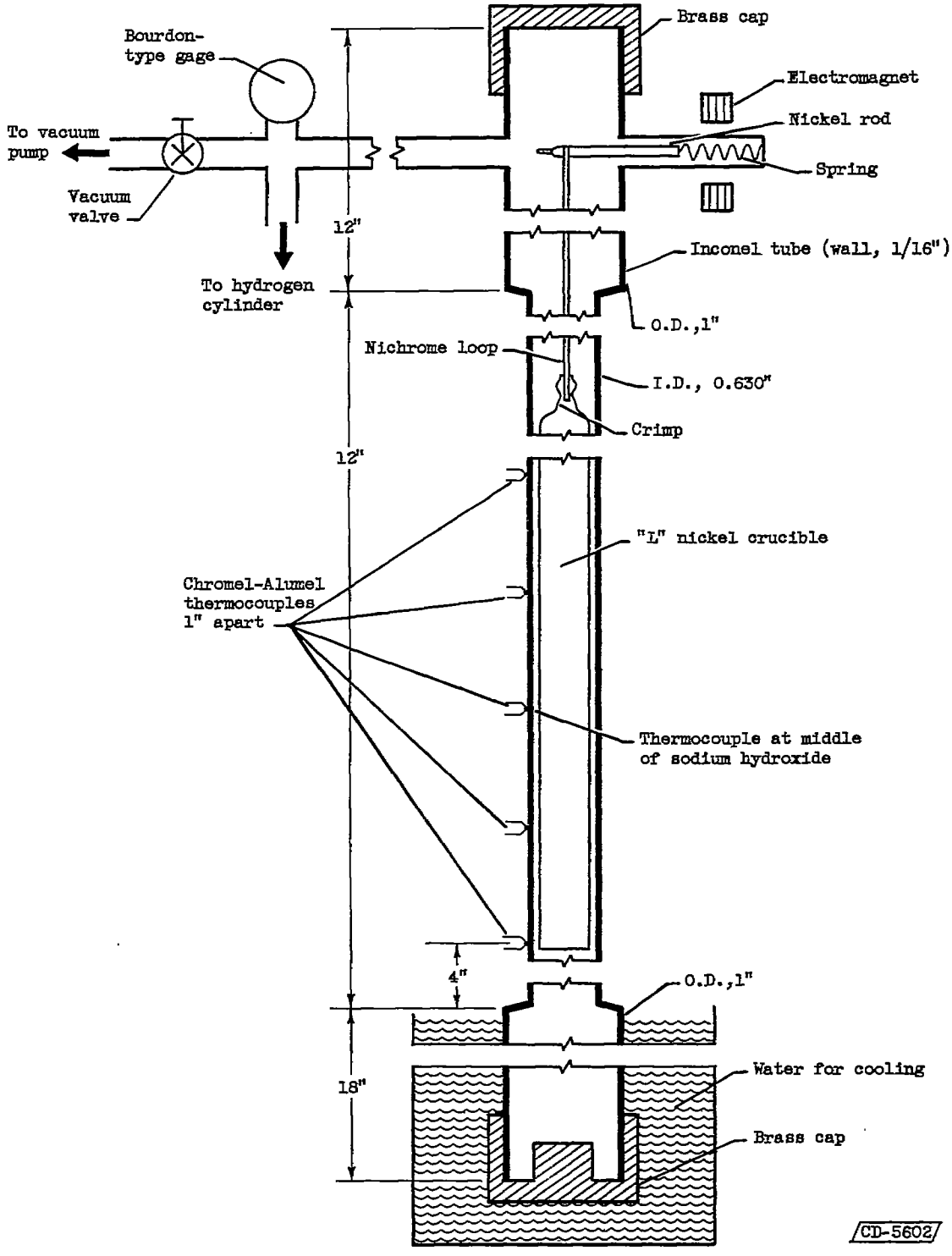

Figure 4. - Apparatus for kinetic and equilibrium studies.

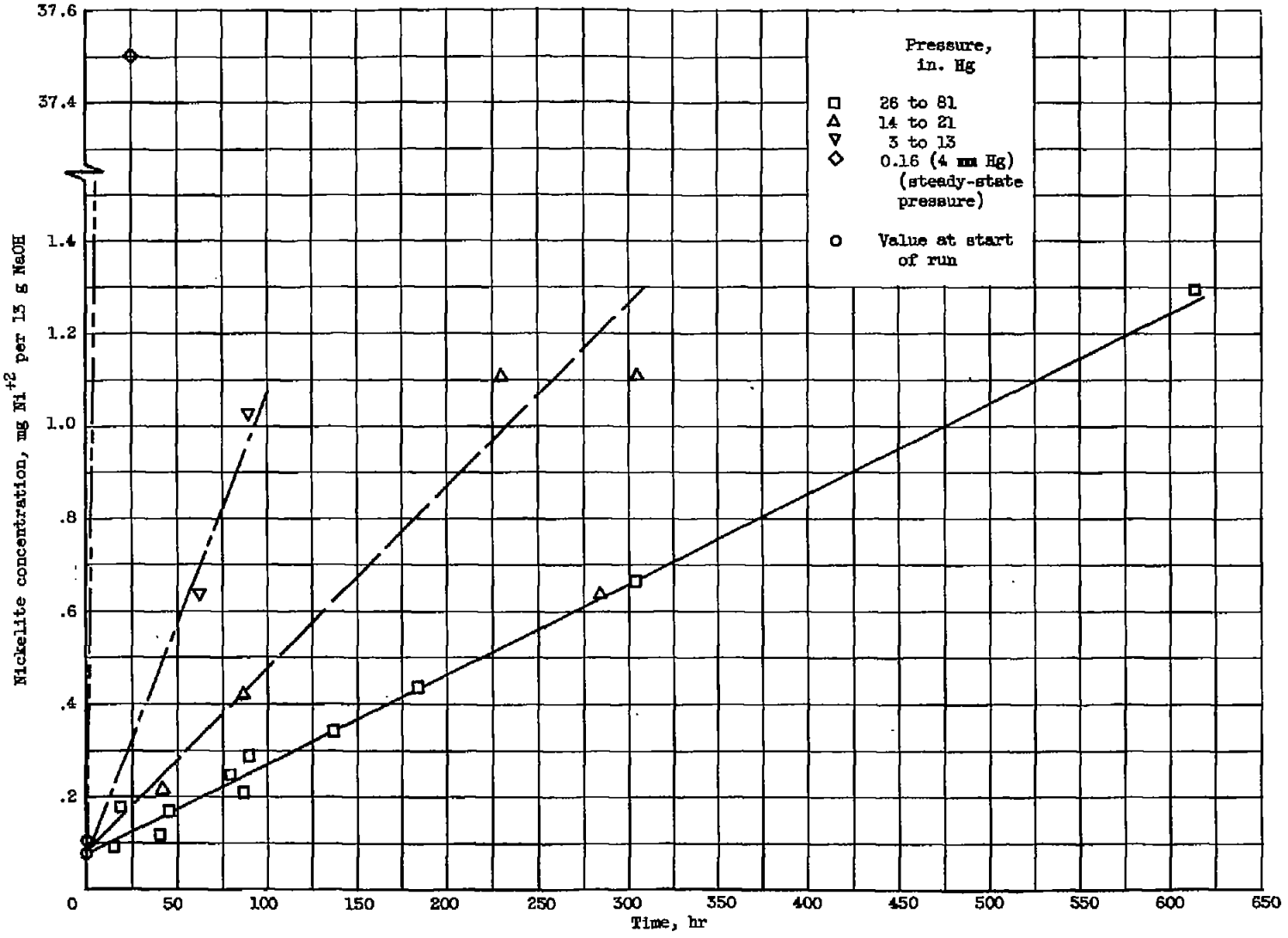

Figure 5. - Rate of formation of sodium nickelite from nickel and sodium hydroxide at 1500° F at various hydrogen pressures.

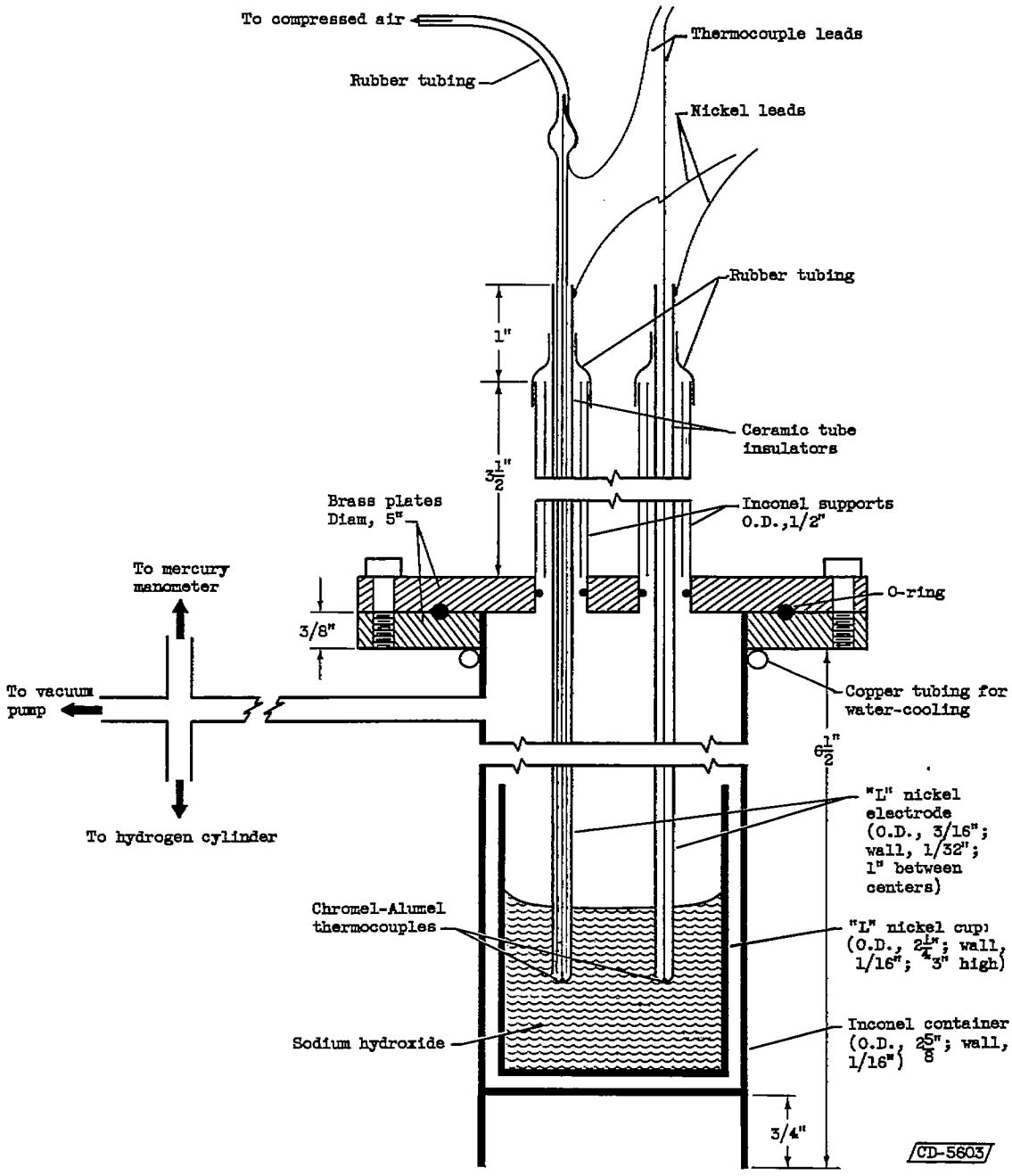

Figure 6. - Apparatus for measurement of thermoelectric potentials.

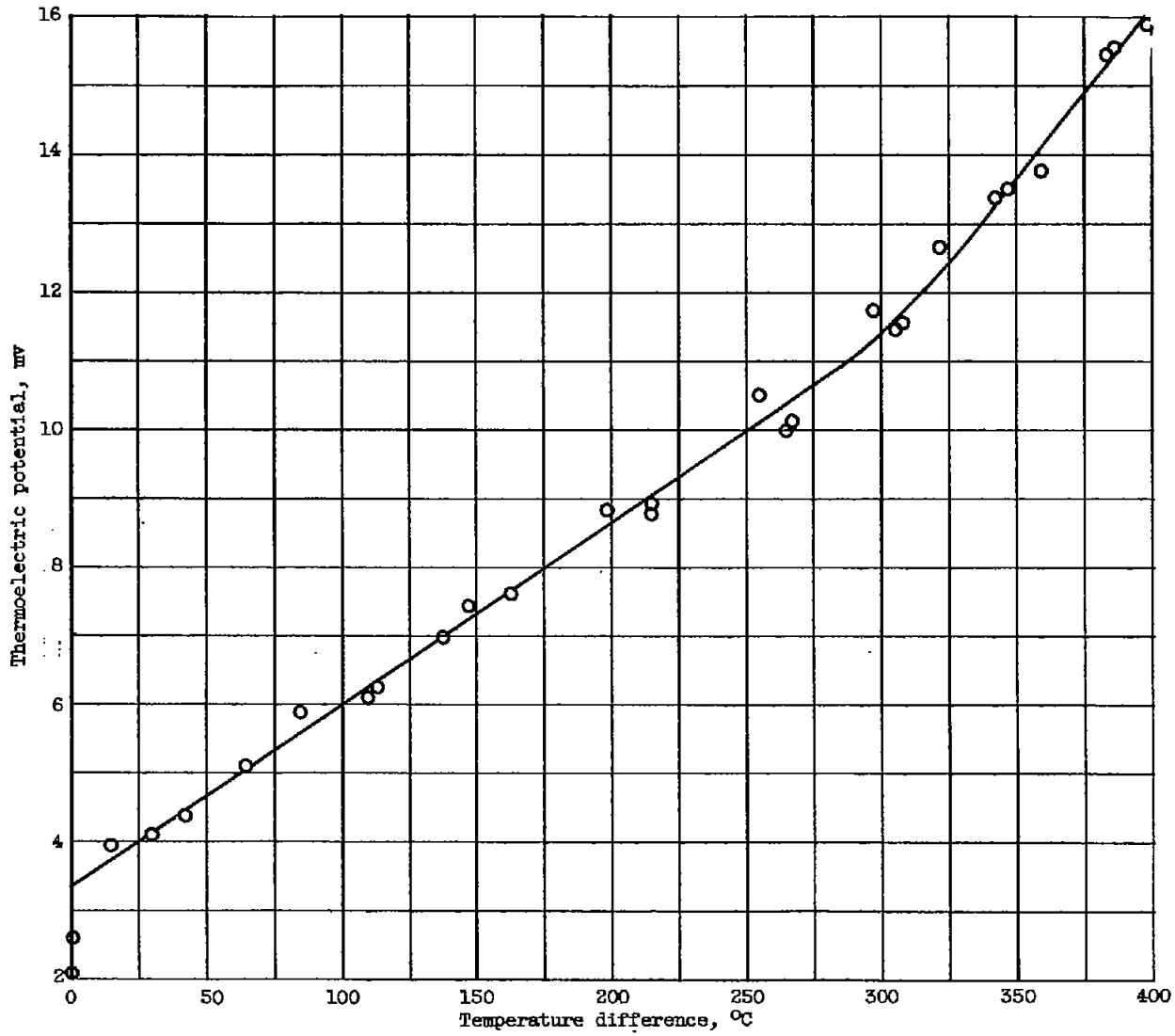

Figure 7. - Thermoelectric potential between two nickel electrodes at different temperatures in sodium hydroxide. Higher temperature, 670° C.