57-7-52

NACA TN 4124 10459

TECH LIBRARY KAFB, NM
0066876

NATIONAL ADVISORY COMMITTEE FOR AERONAUTICS

TECHNICAL NOTE 4124

EFFECT OF GROUND PROXIMITY ON THE AERODYNAMIC CHARACTERISTICS OF A FOUR-ENGINE VERTICAL-TAKE-OFF-AND-LANDING TRANSPORT-AIRPLANE MODEL WITH TILTING WING AND PROPELLERS

By William A. Newsom, Jr.

Langley Aeronautical Laboratory
Langley Field, Va.

Washington
October 1957

AFMDC
TECHNICAL LIBRARY
AFL 2811

TECH LIBRARY KAFB, NM
0066876

NATIONAL ADVISORY COMMITTEE FOR AERONAUTICS

TECHNICAL NOTE 4124

EFFECT OF GROUND PROXIMITY ON THE AERODYNAMIC CHARACTERISTICS OF A FOUR-ENGINE VERTICAL-TAKE-OFF-AND-LANDING TRANSPORT-AIRPLANE MODEL WITH TILTING WING AND PROPELLERS

By William A. Newsom, Jr.

SUMMARY

An investigation has been made to study the effect of ground proximity on the aerodynamic characteristics of a four-engine vertical-take-off-and-landing transport-airplane model with tilting wing and propellers. Tests were made with the wing at an angle of incidence of 90°, the position used for vertical take-off or landing. With the model at various heights above the ground, the lift, drag, and pitching moment were measured and tuft studies were made to determine the flow field caused by the propeller slipstream. Data were obtained for the complete model, for the model with horizontal tail removed, and for the wing-propeller combination alone.

The results of the investigation showed that, when the model was hovering near the ground, there was a strong upwash in the plane of symmetry and also an increase in lift of about 10 percent of the propeller thrust. About one-half of this lift resulted from an increase in propeller thrust and one-half resulted from an up load on the fuselage induced by the upwash. As the model approached the ground, it also experienced an increasing nose-down pitching moment that evidently resulted from the up load on the fuselage, the rear part of which was longer than the front part. The addition of the horizontal tail which was located about halfway up the vertical tail did not increase the nose-down pitching moment because the fuselage decreased the energy of the upwash before it reached the tail.

INTRODUCTION

During flight tests of four-engine vertical-take-off transport-airplane models by the Langley Free-Flight-Tunnel Section (refs. 1 and 2), the models were observed to experience an increasing nose-down pitching moment as they approached the ground. In reference 2 a short series of tuft studies was made at the time of the flight tests in order to get some idea of the flow that was being experienced at the tail. These tests indicated that the nose-down pitching moment was probably being caused by an upwash on the tail, but the tests were not extensive enough to establish definitely the basic characteristics of the flow or how the flow was modified by the presence of the fuselage. From what was learned of the flow field, however, this upwash seemed to be a fundamental characteristic of airplanes of this type in which the propellers are located side by side at some distance from the plane of symmetry with the propeller slipstream directed toward the ground.

The present investigation was made in order to obtain a detailed picture of the flow resulting from the propeller slipstream and to measure the forces and moments involved. Tests were made for a model propeller height above the ground ranging from 1.3 to 3.0 propeller diameters. At each test point, the lift, drag, and pitching moment on the model were measured and a tuft study was made of the flow in the plane of symmetry and in the wing chord plane. Data were obtained for the wing-propeller combination alone, for the complete model, and for the model with the horizontal tail removed.

SYMBOLS

All forces and moments are referred to the body axes which were also the horizontal and vertical space axes inasmuch as all the tests were made with the fuselage axis in a level position. The symbols used in the paper are as follows:

L	lift, lb
D	drag, lb
M_Y	pitching moment, ft-lb
h	height above ground, in.
z	height of model propellers above ground, in.

d distance forward or rearward of wing chord plane, in.

D propeller diameter, in.

APPARATUS AND TESTS

The model (see figs. 1 and 2) was the same as the model of reference 2 except that the wing pivot point was moved to the 30-percent mean-aerodynamic-chord station as shown in table I which presents the geometric characteristics of the model. The tuft surveys of the flow were made with the model suspended from a boom projecting from the wall as shown in figure 3(a). This setup was not rigid enough for accurate force measurements; therefore, the force tests were made with the model mounted on a retractable strut projecting from the floor as shown by the sketch in figure 3(b). The forces and moments were measured by an electric strain-gage balance mounted at a position just below the wing pivot point, and the data were transferred to the center-of-gravity position shown in figure 1. The tests were conducted in the large room used by the Langley Free-Flight-Tunnel Section for flight tests of models in the hovering condition.

All tests were made with the fuselage in a horizontal position and the wing at an angle of incidence of 90°, the position used for vertical take-off or landing. Data were obtained for three model configurations: a complete model, a model with horizontal tail removed, and a wing-propeller combination alone. At each height of the model above the ground, the lift, drag, and pitching moment were recorded and tuft surveys of the flow were made in the plane of symmetry and in the wing chord plane. The tests were made at a reduced propeller speed of 2,250 revolutions per minute to avoid overheating the model motor.

All the systematic tests of the investigation were made with the propellers rotating in the direction shown in figure 1. In order to determine whether the results obtained would be significantly affected by the direction of the propeller rotation, two types of check tests were made. The first type consisted of measuring the forces and moments and making limited tuft surveys at several heights for the complete model with the propellers turning in the opposite direction to that shown in figure 1. The second type consisted of a limited tuft survey in which the model of reference 3 was used with its propellers all turning in the same direction. The model of reference 3 was a wing having four propellers spaced along the span so that they did not overlap, and the propeller slipstream covered almost the entire span except for the center portion which would be occupied by a fuselage. The tuft

survey was made with the wing at an angle of incidence of 90° and with the plane of the propellers at 1.5 propeller diameters above the ground.

RESULTS AND DISCUSSION

Flow Surveys

The basic flow field caused by the propeller slipstream is shown in figure 4 for the wing-propeller combination alone. Although a tuft study was made for various heights of the model above the ground, only one plot of the flow field is presented since the flow is essentially the same with respect to the ground for all model heights. The plan view of figure 4 shows that the plane of symmetry acts as a solid wall through which no flow can pass because of the exactly opposite direction of the flow on the other side. When the slipstream of the propellers on one wing approaches the ground (fig. 4(b)), it tends to spread out and flow outward along the ground in all directions. Since the slipstream cannot flow through the plane of symmetry, the flow that starts along the ground toward the plane of symmetry tends to go upward to escape. The flow at the plane of symmetry, therefore, goes straight upward at a station directly between the propellers and also goes upward at progressively smaller angles at greater distances ahead of and behind the propellers. This upward flow, or upwash, does not extend far from the plane of symmetry with sufficient velocity to be detected with a tuft; therefore, the fuselage and the inboard portion of the horizontal tail are the only parts of the model which are affected by upwash.

The addition of the rest of the model to the wing modified the basic flow field somewhat. Along the plane of symmetry, when the upwash encountered the bottom of the fuselage, it flowed up and around the sides of the fuselage at a more vertical angle than that indicated by the sketch of the basic flow field in figure 4. From the action of the tufts, the velocity of the flow in the region above the fuselage was observed to be much less than that at the same height for the wing-propeller combination alone.

The results of the check tests to investigate the effect of the direction of propeller rotation showed that the flow field was not noticeably altered by a change in the direction of the propeller rotation.

Force Tests

The effects of the various model configurations on the variation of lift, drag, and pitching moment with the height of model propellers

above the ground are presented in figure 5. The drag and pitching-moment data are presented as a band rather than as specific test points since the drag and pitching moment are subject to large random fluctuations which evidently result from the random recirculation of the propeller slipstream in the enclosed test area. The lift, on the other hand, was steady and could be determined more exactly. This large random fluctuation of all the forces and moments except thrust on a propeller has frequently been experienced with propeller-driven vertical-take-off models in the past and was investigated in some detail in the investigation reported in reference 3. The forces and moments measured on the model in the present report with the propellers rotating in the opposite direction are not shown in the figures but gave the same result as the more extensive tests shown in figure 5.

The force-test data of figure 5 show that the lift of the wing-propeller combination alone began to increase as the model reached a height of 1.6 propeller diameters above the ground. This increase in lift is evidently due to an increase in propeller thrust such as that which is experienced with helicopters, but with this multiple-propeller configuration the increase in lift was experienced at a higher height above the ground than that found in tests on single rotors as reported in reference 4. The addition of the fuselage caused an additional increase in lift which extended to greater heights above the ground than those for the wing-alone configuration. This additional increase in lift is evidently caused by the up load on the fuselage exerted by the upwash along the plane of symmetry. At heights less than 1.6 propeller diameters, the lift continues to increase at the same rate for the wing-fuselage combination as for the wing-propeller combination alone. This result indicates that as the height is reduced below 1.6 propeller diameters there is no further increase in the up load on the fuselage and the increased lift is due to the propeller-thrust increase. The addition of the horizontal tail does not cause any increase in the ground effect on lift since, as explained previously, the flow above the fuselage is very weak and the upwash does not extend far from the plane of symmetry.

The pitching-moment data of figure 5 show that the ground caused an increasing nose-down pitching moment for the complete model, or the wing-fuselage combination, as the height above the ground was reduced from 2.2 to 1.6 propeller diameters. At heights less than 1.6 propeller diameters, however, there is little further increase in the nose-down pitching moment. This effect of the fuselage is similar to that shown for the lift. The nose-down pitching moment evidently results from the fact that the fuselage extends much farther behind the wing than ahead of it, and, thus, the up load caused by the upwash on the fuselage gives a nose-down pitching moment. Since there is no further increase in lift on the fuselage at heights less than 1.6 propeller diameters above the

ground, there is little further increase in pitching moment. The addition of the horizontal tail caused no increase in the effect of the ground on the pitching moment, evidently since the upwash in the region of the tail was so weak that it caused no significant increase in tail lift.

The lift and pitching-moment trends noted in the preceding paragraphs are believed to be caused by the relation between the characteristics of the basic flow field and those of the bottom of the fuselage at various heights above the ground as illustrated in figure 6. At heights above the ground from 3.0 propeller diameters down to approximately 2.2 propeller diameters, the flow tends to go upward against the bottom of the fuselage but is not of sufficient strength to affect the lift or pitching moment. Throughout the range above the ground from 2.2 propeller diameters down to about 1.6 propeller diameters, the upward flow pushes increasingly harder against the bottom of the fuselage. From that height down, the flow is more nearly parallel to the bottom of the fuselage particularly back near the tail where it would have the greatest effect on pitching moment.

Since the basic flow field as shown in figure 4 would be about the same for all airplanes of the type tested, it is believed that the fuselage shape would be a very important factor in the effect of ground proximity on the aerodynamic characteristics of vertical-take-off-and-landing airplanes similar to the type tested. For example, a fuselage which is longer ahead of the wing than behind it, or has a pronounced upsweep of the lower fuselage surface in the rear, might result in a nose-up rather than a nose-down pitching moment as the airplane approaches the ground. Although the horizontal tail of the model tested gave essentially no increase in nose-down pitching moment, it is believed that if the horizontal tail had been lower on the model instead of being located in the region of weak flow above the fuselage it might have given a marked increase in the nose-down pitching moment.

CONCLUDING REMARKS

For a four-engine vertical-take-off-and-landing transport-airplane model with tilting wing and propellers in which the propellers are arranged side by side at some distance from the plane of symmetry, there is an upwash in the plane of symmetry when the airplane is hovering near the ground. This upwash goes straight upward at a station directly between the propellers and also goes upward at progressively smaller angles at greater distances ahead of and behind the propellers. This upwash is sufficiently strong to produce significant increases in lift when the airplane is near the ground and can cause large changes in pitching moment, the sign and magnitude of which are probably greatly

influenced by the fuselage shape and its relative length ahead of or behind the wing chord plane. The center portion of a low horizontal tail might also contribute to the pitching moment when it is not shielded by the fuselage.

Langley Aeronautical Laboratory,
National Advisory Committee for Aeronautics,
Langley Field, Va., July 30, 1957.

REFERENCES

1. Tosti, Louis P., and Davenport, Edwin E.: Hovering Flight Tests of a Four-Engine-Transport Vertical Take-Off Airplane Model Utilizing a Large Flap and Extensible Vanes for Redirecting the Propeller Slipstream. NACA TN 3440, 1955.

2. Lovell, Powell M., Jr., and Parlett, Lysle P.: Hovering-Flight Tests of a Model of a Transport Vertical-Take-Off Airplane With Tilting Wing and Propellers. NACA TN 3630, 1956.

3. Newsom, William A., Jr.: Effect of Propeller Location and Flap Deflection on the Aerodynamic Characteristics of a Wing-Propeller Combination for Angles of Attack From 0° to 80°. NACA TN 3917, 1957.

4. Knight, Montgomery, and Hefner, Ralph A.: Analysis of Ground Effect on the Lifting Airscrew. NACA TN 835, 1941.

TABLE I

GEOMETRIC CHARACTERISTICS OF MODEL

Weight, lb	75.0
Fuselage length, in.	84.8
Propellers (two blades each):	
Diameter, in.	20.0
Solidity (each propeller)	0.079
Wing:	
Pivot point, percent mean aerodynamic chord	30
Sweepback (leading edge), deg	6.0
Airfoil section	NACA 0015
Aspect ratio	5.85
Tip chord, in.	9.4
Root chord (in plane of symmetry), in.	17.6
Taper ratio	0.53
Area (total to plane of symmetry), sq in.	988
Span, in.	76.0
Mean aerodynamic chord, in.	13.0
Control flap hinge line, percent chord	75
Dihedral angle, deg	0
Vertical tail:	
Sweepback (leading edge), deg	5.0
Airfoil section	NACA 0009
Aspect ratio	1.94
Tip chord, in.	7.54
Root chord (at center line), in.	11.12
Taper ratio	0.68
Area (total to center line - excluding dorsal area), sq in.	169.1
Span, in.	18.125
Mean aerodynamic chord, in.	9.45
Rudder (hinge line perpendicular to fuselage center line):	
Tip chord, in.	2.5
Root chord, in.	4.05
Span, in.	14.03
Horizontal tail:	
Sweepback (leading edge), deg	7.3
Airfoil section	NACA 0009
Aspect ratio	5.81
Tip chord, in.	4.6
Root chord (at center line), in.	8.3
Taper ratio	0.55
Area (total to center line), sq in.	241.9
Span, in.	37.5
Mean aerodynamic chord, in.	6.62
Elevator (hinge line perpendicular to fuselage center line):	
Tip chord, in.	2.13
Root chord, in.	3.30
Span (each), in.	16.94

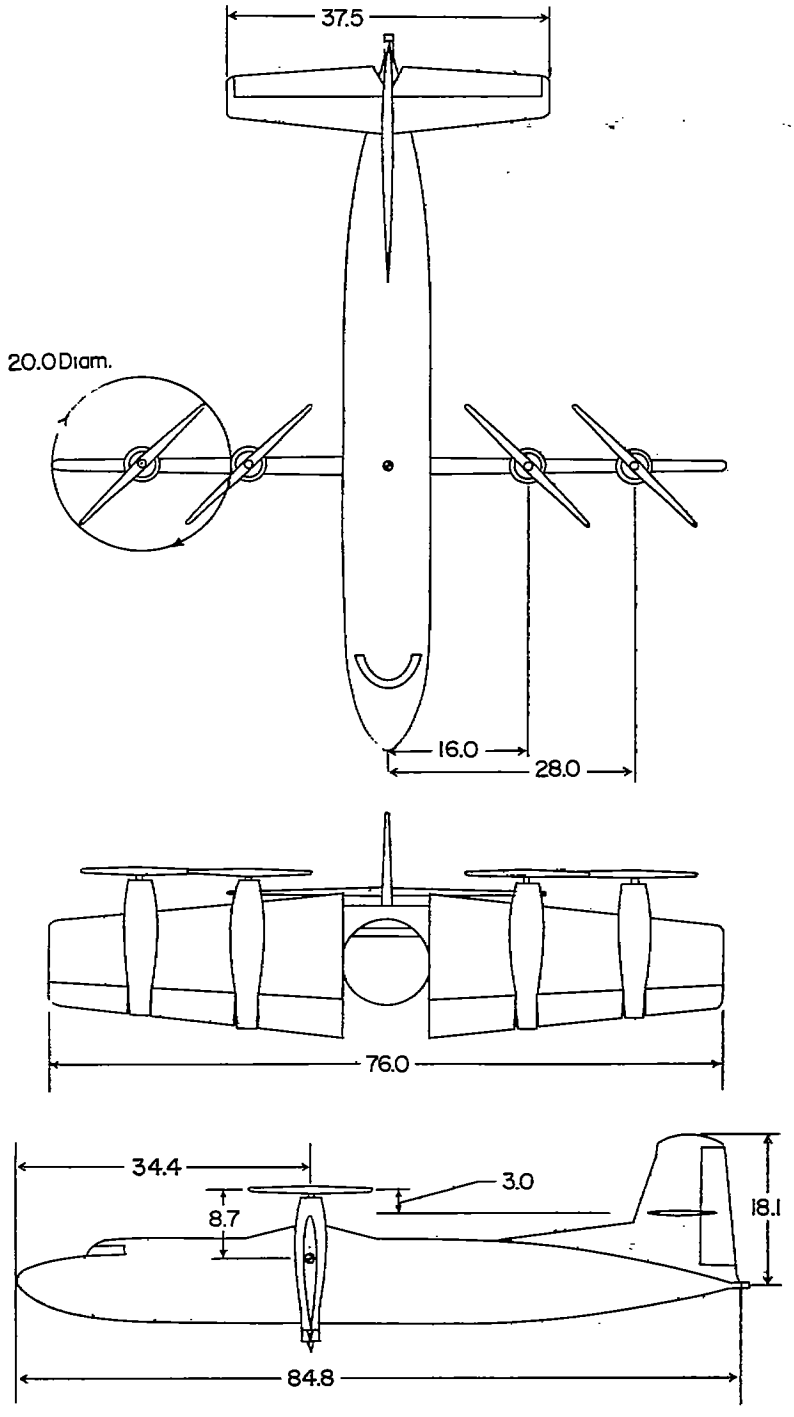

Figure 1.- Three-view drawing of model tested. All dimensions are in inches.

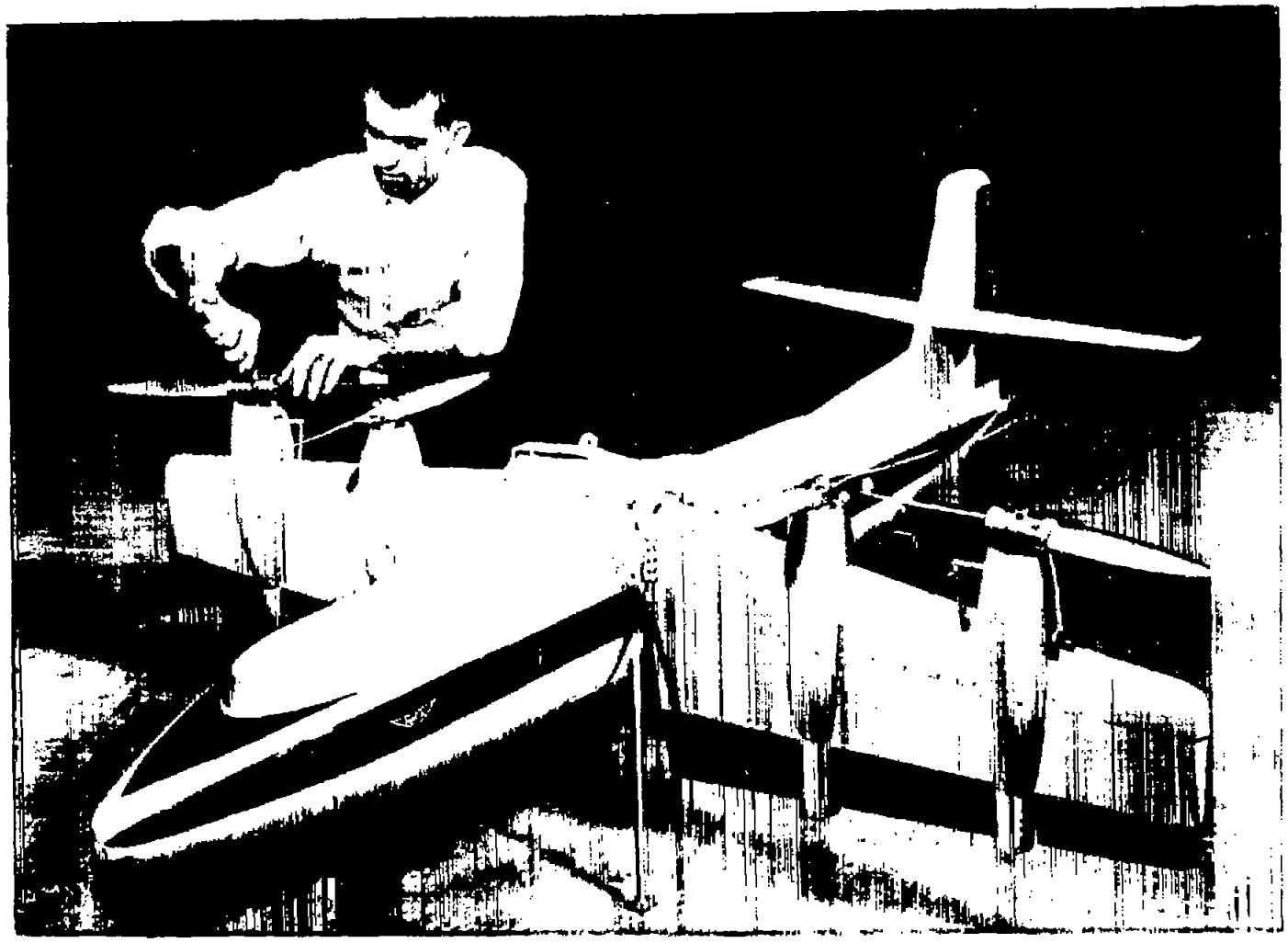

Figure 2.- Complete model. L-93039

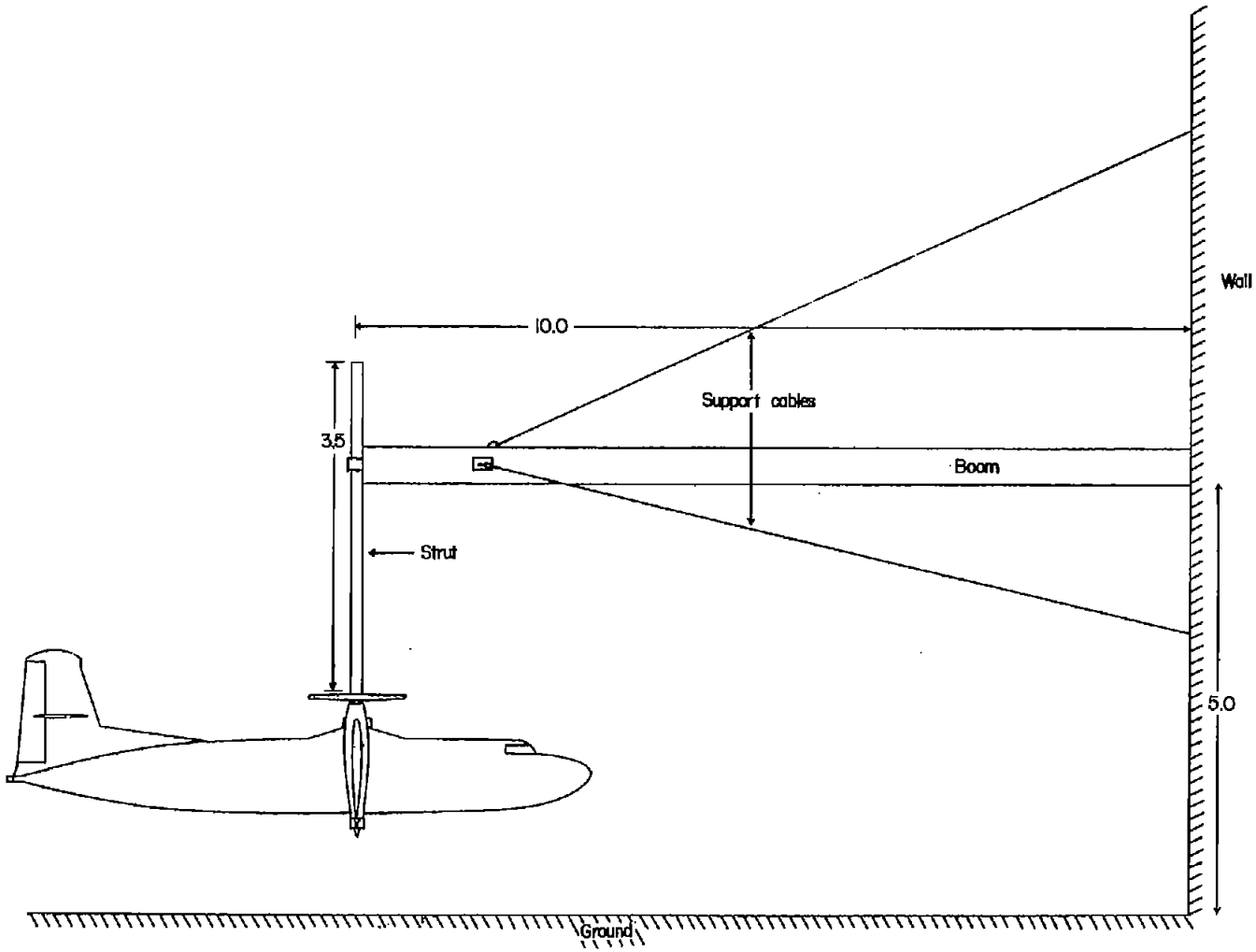

(a) Tuft-survey setup.

Figure 3.- Model test setup. All dimensions are in feet.

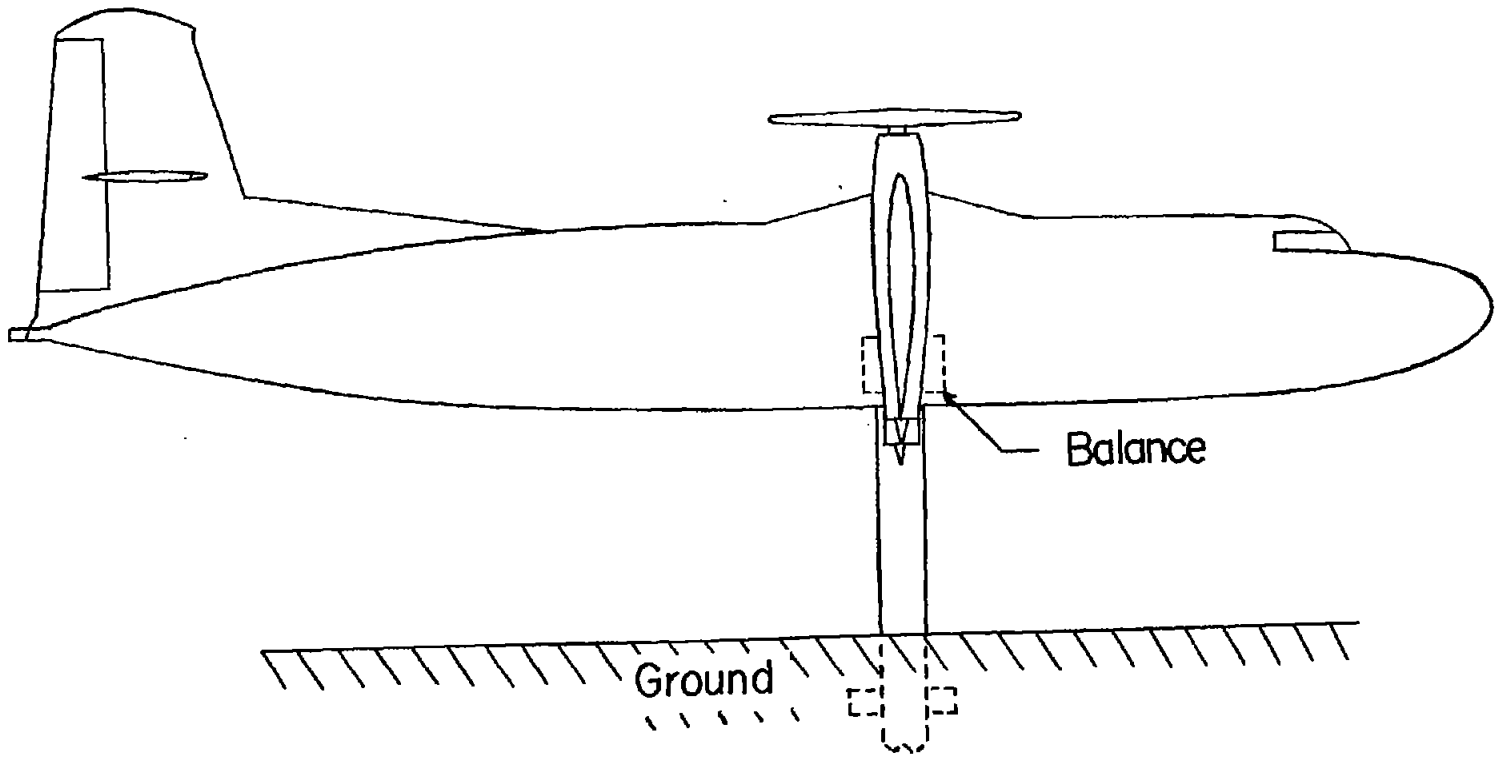

(b) Force-test setup.

Figure 3.- Concluded.

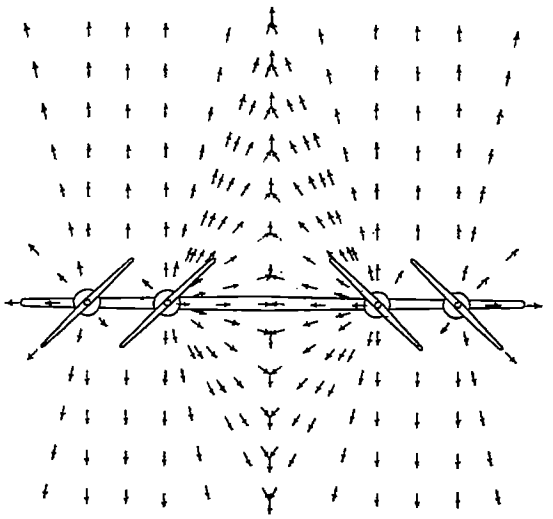

(a) Plan view.

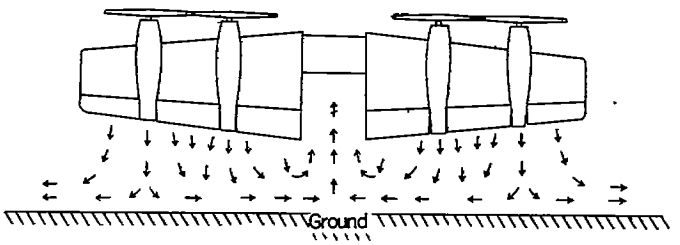

(b) Wing chord plane.

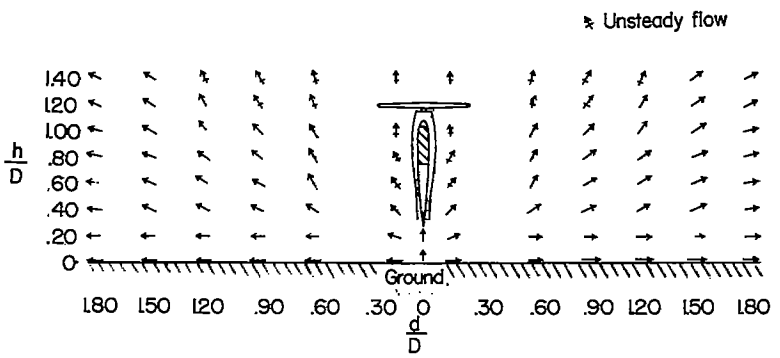

(c) Plane of symmetry.

Figure 4.- Basic flow field created by propeller slipstream shown for wing-propeller combination alone.

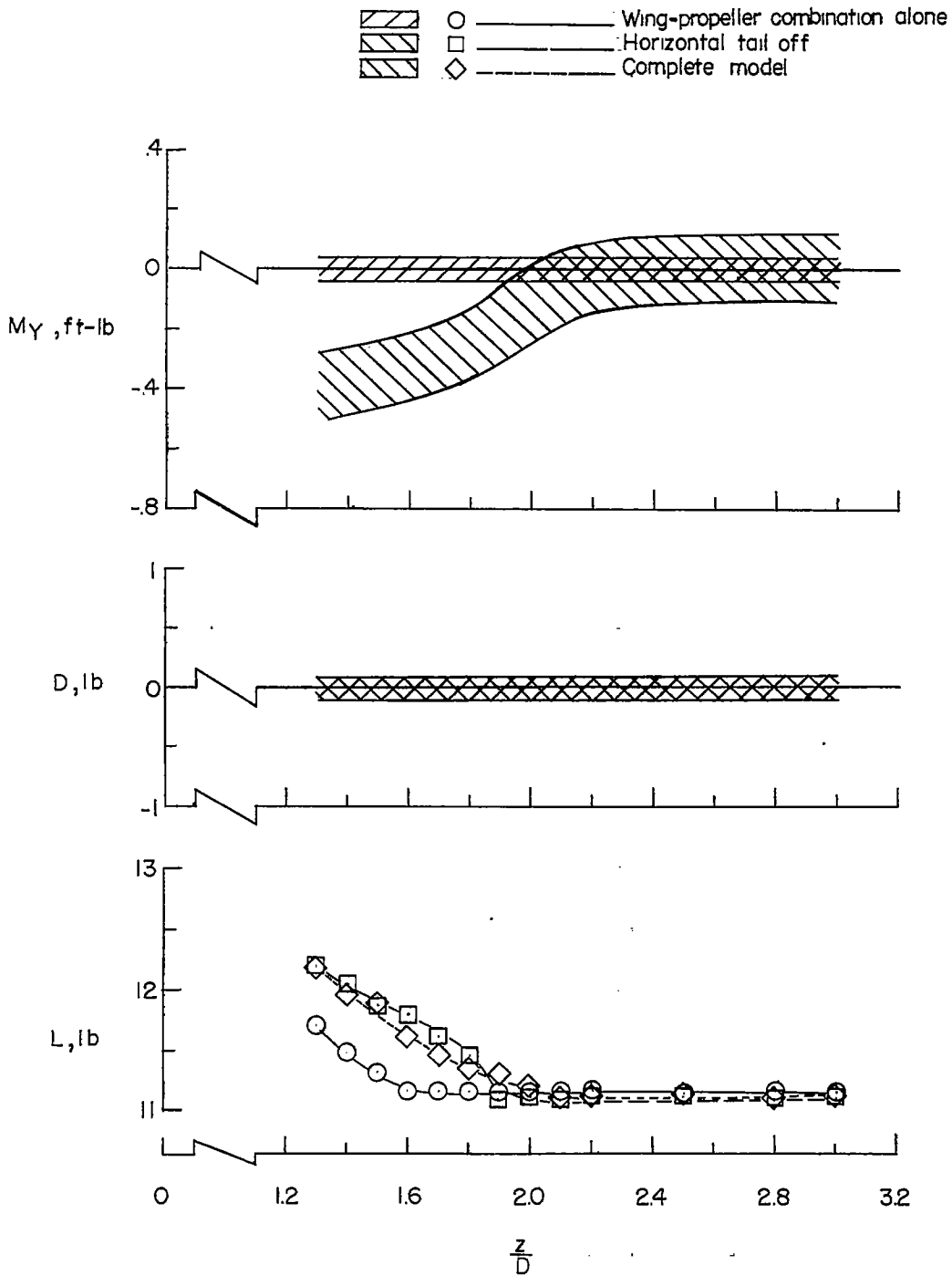

Figure 5.- Variation of lift, drag, and pitching moment with model propeller height above ground for various test configurations.

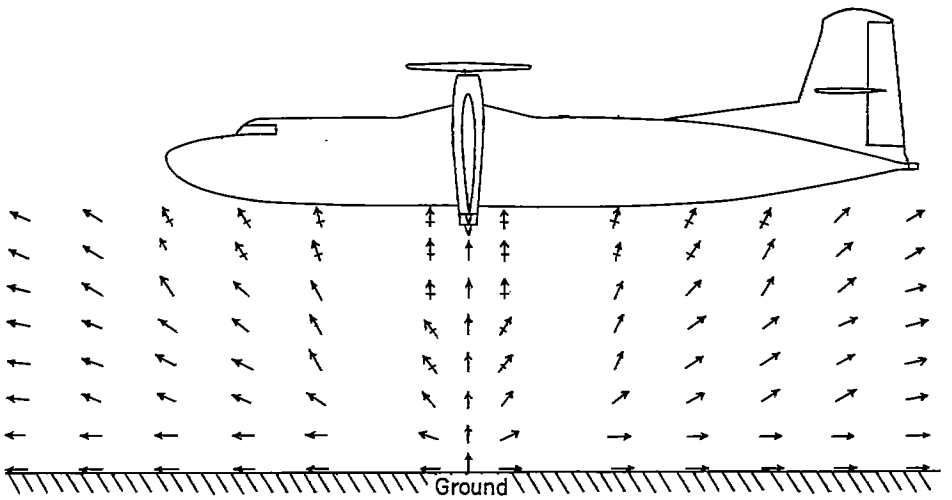

(a) Model 2.6 propeller diameters above ground.

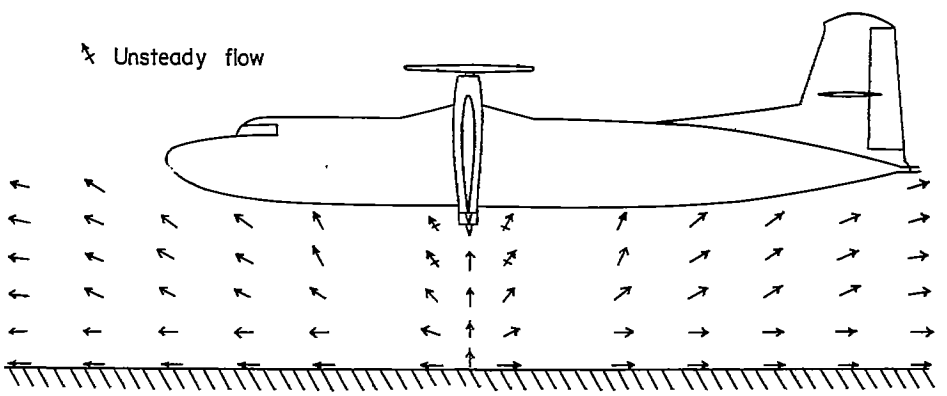

(b) Model 1.9 propeller diameters above ground.

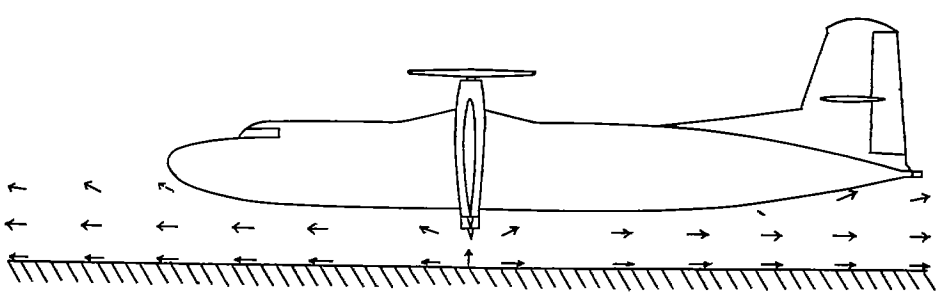

(c) Model 1.4 propeller diameters above ground.

Figure 6.- Relation between bottom of fuselage and flow field at various heights above ground.