REPORT 1342

A VARIATIONAL THEOREM FOR CREEP WITH APPLICATIONS TO PLATES AND COLUMNS [1]

By J. Lyell Sanders, Jr., Harvey G. McComb, Jr., and Floyd R. Schlechte

SUMMARY

A variational theorem is presented for a body undergoing creep. Solutions to problems of the creep behavior of plates, columns, beams, and shells can be obtained by means of the direct methods of the calculus of variations in conjunction with the stated theorem. The application of the theorem is illustrated for plates and columns by the solution of two sample problems.

INTRODUCTION

Interest in the various effects of creep in metals has intensified in recent years in the aeronautical field because of actual or envisaged operation of aircraft in an elevated-temperature environment. Much experimental work has been done to determine the creep stress-strain relations of various metals at elevated temperatures, and much data have been accumulated on the creep collapse of columns and plates. Analytically, creep problems for beams, columns, and plates are more difficult than the corresponding elastic problems, because the creep stress-strain relations (which generally include the possibility of elastic and plastic strains) are nonlinear. One consequence of this nonlinearity is that the distribution of the stresses through the thickness of the beam, plate, or column is not nearly so simple as in the elastic case. Mathematical analyses of these structural components have often been restricted to simplified models (H-section columns, for example) to avoid this difficulty.

No known systematic procedures have been devised for reducing a given creep problem to a set of differential equations, although some efforts have been made to develop variational methods for use in attacking these problems mathematically. Hoff (refs. 1 and 2) has suggested the use of a minimum-complementary-energy principle based on an analog between the creep-strain rates and the elastic strains in a nonlinearly elastic body; however, elastic and plastic strains are neglected and the method does not apply readily to plate and column problems. Wang and Prager (ref. 3) have given two general extremum principles (for a body with elastic, plastic, thermal, and creep strains) analogous to the minimum-complementary-energy and minimum-potential-energy principles in elasticity. In the present report, an analog of Reissner's variational theorem in elasticity (refs. 4 and 5) is formulated (for a body with elastic, plastic, and creep strains), and special forms of it are found to be convenient for handling creep problems of plates, columns, beams, and shells. The use of the variational theorem presented herein is illustrated by applications to two creep problems: creep collapse of columns and plate bending.

SYMBOLS

E	Young's modulus
I	integral to be varied (see eq. (7))
I_1,I_2,I_3	integrals defined by equations (46)
J_2	second invariant of stress-deviator tensor
M_r,M_t	radial and tangential bending moments, respectively, per unit length
$M_{r,0},M_{t,0},M_{t,1}$	radial and tangential bending-moment coefficients defined by equations (44)
P	compressive load
P_c	buckling load for column
S	surface of a body
S_s	part of surface where stresses are prescribed
S_d	part of surface where displacements are prescribed
T_i	surface traction
$\overline{T}_i$	prescribed surface traction on S_s
U	displacement of neutral surface in x-direction
U_0	displacement coefficient in x-direction (see eqs. (28))
V	displacement of neutral surface in y-direction; also used as volume integral
W	deflection of neutral surface in z-direction
W_0,W_1	deflection coefficients (see eqs. (28) or (44))
R	radius of circular plate
b	width of column
h	thickness of column or plate
l	length of column
m	empirical constant in creep law
n_j	unit external normal to surface of undeformed body
p	empirical constant in creep law
q	lateral load intensity on circular plate
r	radial coordinate

[1] Supersedes NACA Technical Note 4003 by J. Lyell Sanders, Jr., Harvey G. McComb, Jr., and Floyd R. Schlechte, 1957.

s_{ij}	stress-deviator tensor
t	time
u	displacement in x-direction
u_i	displacement vector
$\bar{u}_i$	prescribed displacement vector on S_d
v	displacement in y-direction
w	displacement in z-direction
x,y,z	coordinates
$\gamma_{xz},\gamma_{yz},\gamma_{xy}$	shear strains in xz-, yz-, and xy-directions, respectively
Δ	amplitude of initial bow of column divided by column thickness
δ_{ij}	Kronecker delta
ϵ	strain, positive in tension
ϵ_{ij}	strain tensor
ϵ'_{ij}	noncreep portion of strain tensor
ϵ''_{ij}	creep strain tensor
ϵ_r,ϵ_t	radial and tangential strains, respectively
$\epsilon_x,\epsilon_y,\epsilon_z$	strain in x-, y-, and z-directions, respectively
θ	angular coordinate
λ	empirical constant in creep law
μ	Poisson's ratio
$\rho=r/R$	
σ	stress, positive in tension
σ_{ij}	stress tensor
σ_0^*,σ_1^*	stresses defined in equation (27)
σ_0,σ_1	stress coefficients in equations (28)
σ_r,σ_t	radial and tangential stresses, respectively

Dots over quantities denote differentiation with respect to time, a single prime denotes the elastic-plastic part of the strain, and a double prime denotes the creep part of the strain.

FORMULATION OF GENERAL VARIATIONAL THEOREM

For a body subject to creep, the equilibrium equations and strain-displacement relations are the same as those for an elastic body; the only difference in the mathematical formulation of a creep problem is in the stress-strain relation. In the present development, the nonlinear strain-displacement relations and equilibrium equations are used because of the intended application of the variational theorem to collapse problems of columns and plates. However, the strains are still assumed to be small, and the stress-strain relations are written as for infinitesimal strains. The total strain rate is separated into a creep part and a part which includes elastic and plastic effects. The creep part of the strain rate is allowed to depend on time and on the stress deviator but not on the stress rate or the first invariant of stress. In this report, the temperature of the body is assumed to be uniform and constant in time.

In tensor notation, a simple example of the creep law assumed is

$$\dot{\epsilon}''_{ij}=f(J_2,t)s_{ij} \tag{1}$$

where s_{ij} is the stress deviator and J_2 is the second invariant $\frac{1}{2}s_{ij}s_{ij}$. For purposes of the present report, the only restriction on the stress-strain relation for the elastic-plastic part of the strain is that the following relation hold (see ref. 6):

$$\dot{\sigma}_{ij}d\dot{\epsilon}'_{ij}\equiv\dot{\epsilon}'_{ij}d\dot{\sigma}_{ij} \tag{2}$$

The equation for the components of finite strain is

$$\epsilon_{ij}=\frac{1}{2}(u_{i,j}+u_{j,i}+u_{k,i}u_{k,j}) \tag{3}$$

or, in differentiated form,

$$\dot{\epsilon}_{ij}=\frac{1}{2}(\dot{u}_{i,j}+\dot{u}_{j,i}+\dot{u}_{k,i}u_{k,j}+u_{k,i}\dot{u}_{k,j}) \tag{4}$$

The equilibrium equation is

$$[(\delta_{ik}+u_{i,k})\sigma_{jk}]_{,j}=0 \tag{5}$$

The equation giving the surface traction T_i in terms of stresses and displacements on the boundary is

$$T_i=\sigma_{jk}n_j(\delta_{ik}+u_{i,k}) \tag{6}$$

where n_j is the unit external normal to the surface of the undeformed body.

The components of the tensor ϵ_{ij} are not true strains, and neither are the components of the tensor σ_{ij} true stresses. However, the specific virtual work due to a virtual displacement δu_i is given by

$$\delta W=\sigma_{ij}\delta\epsilon_{ij}$$

Therefore, the tensor σ_{ij} may be considered to be the generalized force conjugate to the generalized displacement ϵ_{ij}. In reference 7, this tensor is called k_{ij} and in reference 8 it is called σ^*_{ij}.

As in many of the variational theorems of the mathematical theory of plasticity (see ref. 6), the variational theorem to be stated here is for stress rates and strain rates; that is, if the states of stress and strain throughout the body are known at a given instant, then application of the variational theorem singles out the stress rates or strain rates that actually occur from those rates of stress or strain considered in the enunciation of the theorem. Thus, the operator δ in the formal process of taking the variations is applied only to time derivatives of quantities and not to the quantities themselves. Because of this, for example, $\delta\dot{\epsilon}''_{ij}=0$ because $\dot{\epsilon}''_{ij}$ depends upon the state of stress but not upon the stress rate. (See eq. (1).)

The quantity to be varied was constructed by an inverse process guided by the form of Reissner's theorem and the first theorem of Wang and Prager. By trial and error, the terms necessary to obtain the desired result were found for the integral to be varied. Let $\dot{T}_i=\dot{\bar{T}}_i$ be prescribed on the part S_s of the bounding surface S of a body and let $\dot{u}_i=\dot{\bar{u}}$ be prescribed on the remaining part S_d of the boundary. The variational theorem to be proved is $\delta I=0$ where

$$I=\int_V\left[\dot{\epsilon}_{ij}\dot{\sigma}_{ij}+\frac{1}{2}\dot{u}_{k,i}\dot{u}_{k,j}\sigma_{ij}-\frac{1}{2}(\dot{\epsilon}'_{ij}+2\dot{\epsilon}''_{ij})\dot{\sigma}_{ij}\right]dV-\int_{S_s}\dot{\bar{T}}_i\dot{u}_i\,dS-\int_{S_d}(\dot{u}_i-\dot{\bar{u}}_i)\dot{T}_i\,dS \tag{7}$$

In the first term of the volume integral, $\dot{\epsilon}_{ij}$ is understood to

be written in terms of displacements and velocities (eq. (4)). In the third term of the volume integral, $\dot{\epsilon}'_{ij}$ is understood to be written in terms of stresses and stress rates, whereas $\dot{\epsilon}''_{ij}$ is written in terms of stresses.

The variation of I is given by

$$\delta I=\int_V\Big[\dot{\epsilon}_{ij}\delta\dot{\sigma}_{ij}+\dot{\sigma}_{ij}\delta\dot{\epsilon}_{ij}+\sigma_{ij}\dot{u}_{k,i}\,\delta\dot{u}_{k,j}-\frac{1}{2}\dot{\sigma}_{ij}\delta\dot{\epsilon}'_{ij}-\frac{1}{2}(\dot{\epsilon}'_{ij}+2\dot{\epsilon}''_{ij})\delta\dot{\sigma}_{ij}\Big]dV-\int_{S_s}\dot{\bar{T}}_i\delta\dot{u}_i dS-\int_{S_d}[(\dot{u}_i-\dot{\bar{u}}_i)\delta\dot{T}_i+\dot{T}_i\delta\dot{u}_i]\,dS \quad (8)$$

where $\delta\dot{\epsilon}''_{ij}=0$ as previously noted. The second term in the volume integral may be transformed by an integration by parts. The following formula applies:

$$\int_V\dot{\sigma}_{ij}\delta\dot{\epsilon}_{ij}dV=\int_S\dot{\sigma}_{ij}n_j(\delta_{ik}+u_{k,i})\delta\dot{u}_k dS-\int_V[(\delta_{ik}+u_{k,i})\dot{\sigma}_{ij}]_{,j}\,\delta\dot{u}_k dV \quad (9)$$

The third term may also be integrated by parts; thus,

$$\int_V\sigma_{ij}\dot{u}_{k,i}\,\delta\dot{u}_{k,j}\,dV=\int_S\sigma_{ij}n_j\dot{u}_{k,i}\,\delta\dot{u}_k dS-\int_V(\sigma_{ij}\dot{u}_{k,i})_{,j}\,\delta\dot{u}_k dV \quad (10)$$

By using equations (9), (10), and (2), equation (8) becomes

$$\delta I=\int_V\{\dot{\epsilon}_{ij}\delta\dot{\sigma}_{ij}-[(\delta_{ik}+u_{k,i})\dot{\sigma}_{ij}]_{,j}\,\delta\dot{u}_k-(\sigma_{ij}\dot{u}_{k,i})_{,j}\,\delta\dot{u}_k-(\dot{\epsilon}'_{ij}+\dot{\epsilon}''_{ij})\delta\dot{\sigma}_{ij}\}dV+\int_S[\dot{\sigma}_{ij}n_j(\delta_{ik}+u_{k,i})+\sigma_{ij}n_j\dot{u}_{k,i}]\delta\dot{u}_k dS-\int_{S_s}\dot{\bar{T}}_i\delta\dot{u}_i dS-\int_{S_d}[(\dot{u}_i-\dot{\bar{u}}_i)\delta\dot{T}_i+\dot{T}_i\,\delta\dot{u}_i]dS \quad (11)$$

or

$$\delta I=\int_V\Big\{(\dot{\epsilon}_{ij}-\dot{\epsilon}'_{ij}-\dot{\epsilon}''_{ij})\,\delta\dot{\sigma}_{ij}-\delta\dot{u}_k\frac{d}{dt}[(\delta_{ik}+u_{k,i})\sigma_{ij}]_{,j}\Big\}dV+\int_{S_s}(\dot{T}_i-\dot{\bar{T}}_i)\delta\dot{u}_i dS-\int_{S_d}(\dot{u}_i-\dot{\bar{u}}_i)\delta\dot{T}_i dS \quad (12)$$

The coefficient of each of the variations vanishes by virtue of the stress-strain relations, equilibrium equations, stress boundary conditions, and displacement boundary conditions, respectively. Thus, it is proved that $\delta I=0$ for the stress rates and strain rates that actually occur.

A term may be added to the volume integral to include the effects of body forces if necessary. In some special cases, the boundary integrals should be modified if boundary conditions other than those on T_i or u_i are imposed.

In the next section, a form for I appropriate for application to thin-plate and column problems is developed.

THEORETICAL APPLICATION OF VARIATIONAL THEOREM TO PLATE AND COLUMN PROBLEMS

The variational theorem proved in the preceding section provides a powerful means for deriving an appropriate two-dimensional theory for thin plates subject to creep (or one-dimensional theory for beams and columns) analogous to the two-dimensional theory for thin elastic plates. If certain simplifying assumptions are made about the dependence of the various displacements and stresses on the z-coordinate (measured normal to the middle surface), the integrations with respect to z in the integral I may then be carried out. The equations resulting from $\delta I=0$ then involve only x, y, and t as independent variables.

In this report, the same simplifying assumptions with regard to displacements are made that were made in the elastic case. In particular, the Bernoulli-Euler hypothesis is retained. This hypothesis can be regarded as a consequence of the equilibrium equations and the strain-displacement equations as applied to a thin plate. The transverse shear stresses vanish on the surface of the plate and are thus expected to be negligible (compared with inplane stresses) throughout the thickness. By any of the common stress-strain relations (elastic, plastic, or creep), it follows that the transverse shear strains are negligible. If w is assumed to be approximately independent of z, then from

$$\gamma_{xz}=\frac{\partial w}{\partial x}+\frac{\partial u}{\partial z}=0 \quad (13)$$

$$\gamma_{yz}=\frac{\partial w}{\partial y}+\frac{\partial v}{\partial z}=0 \quad (14)$$

it follows that

$$u=U-z\frac{\partial W}{\partial x} \quad (15)$$

$$v=V-z\frac{\partial W}{\partial y} \quad (16)$$

$$w=W \quad (17)$$

where U, V, and W can now be identified as the displacements of the middle surface. Equations (15), (16), and (17) express the Bernoulli-Euler hypothesis.

A more rigorous treatment, in which the dependence of the various quantities on the z-coordinate is deduced by expanding them in powers of a thickness parameter, might be possible. In some derivations of plate equations, U, V, and W are interpreted as weighted averages of u, v, and w. (See refs. 4 and 9, for example.) However, the consequences of assuming equations (15), (16), and (17) to be true are expected to lead to accurate results for thin plates.

Equation (3) for the finite strains in terms of displacements is simplified by dropping all nonlinear terms except those containing powers or products of slopes. This simplification leads to the Von Kármán equations for an elastic plate. The resulting equations for the strains are

$$\epsilon_x=\frac{\partial U}{\partial x}-z\frac{\partial^2 W}{\partial x^2}+\frac{1}{2}\left(\frac{\partial W}{\partial x}\right)^2 \quad (18)$$

$$\epsilon_y=\frac{\partial V}{\partial y}-z\frac{\partial^2 W}{\partial y^2}+\frac{1}{2}\left(\frac{\partial W}{\partial y}\right)^2 \quad (19)$$

$$2\epsilon_{xy}=\gamma_{xy}=\frac{\partial U}{\partial y}+\frac{\partial V}{\partial x}-2z\frac{\partial^2 W}{\partial x\partial y}+\frac{\partial W}{\partial x}\frac{\partial W}{\partial y} \quad (20)$$

$$\epsilon_z=\gamma_{xz}=\gamma_{yz}=0 \tag{21}$$

In order to be consistent with these approximations, only terms containing powers or products of rates of slope are retained in the second term of the volume integral in I. (See eq. (7).)

Before the integration with respect to z can be carried out in the expression for I, the dependence of the stresses upon z must be assumed. Unlike the elastic case, the stresses do not vary linearly through the thickness, even though the strains do vary linearly. The particular advantage of the generalized form of Reissner's variational theorem for use in the present problem is that approximations for the stresses and strains can be made independently. Thus, there is no necessity to invert the stress-strain relations in order to determine appropriate approximations for the stresses; in fact, to invert the stress-strain relations would generally be impossible.

Many possibilities exist for assuming the form of the stresses as functions of z, and each possibility leads to a different set of plate equations; thus, no particular system of equations can be set up which can be called the creep equations for a plate, column, or beam. Generally, it is advantageous to assume the form of the stresses and displacements as functions of x and y also, in which case all the integrations in I may be performed. Setting the variation of the resulting expression equal to zero leads to a set of ordinary differential equations in which the independent variable is the time. Further details of the application of the variational theorem to creep-collapse and creep-bending problems of columns and plates can best be communicated by means of examples, two of which are given in the following sections.

EXAMPLE OF APPLICATION OF VARIATIONAL THEOREM TO CREEP COLLAPSE OF COLUMNS

A simplified treatment of the problem of creep collapse of the uniform, pin-ended, rectangular-section column shown in figure 1 is given as the first example. The plastic part of the strain is omitted, and the stress-strain relation is assumed to be

$$\dot{\epsilon}=\frac{\dot{\sigma}}{E}+\lambda p t^{p-1}\sigma^m \tag{22}$$

where the second term on the right includes the effects of primary and secondary creep. The axial displacement u is assumed to be given by

$$u=U-z\frac{\partial W}{\partial x} \tag{23}$$

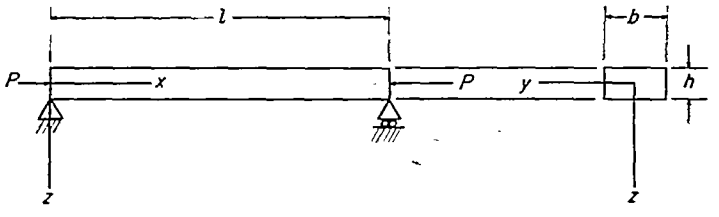

FIGURE 1.—Pin-ended rectangular-section column.

and the axial strain ϵ by

$$\epsilon=\frac{\partial U}{\partial x}-z\frac{\partial^2 W}{\partial x^2}+\frac{1}{2}\left(\frac{\partial W}{\partial x}\right)^2 \tag{24}$$

In the present case, the following terms enter into the expression for I:

$$\left.\begin{aligned}
&\dot{\sigma}_{ij}\dot{\epsilon}_{ij}=\dot{\sigma}\left(\frac{\partial \dot{U}}{\partial x}+\frac{\partial W}{\partial x}\frac{\partial \dot{W}}{\partial x}-z\frac{\partial^2 \dot{W}}{\partial x^2}\right)\\
&\frac{1}{2}\sigma_{ij}\dot{u}_{k,i}\dot{u}_{k,j}=\frac{1}{2}\sigma\left(\frac{\partial \dot{W}}{\partial x}\right)^2\\
&\frac{1}{2}(\dot{\epsilon}'_{ij}+2\dot{\epsilon}''_{ij})\dot{\sigma}_{ij}=\frac{\dot{\sigma}^2}{2E}+\lambda p t^{p-1}\dot{\sigma}\sigma^m\\
&\int_{S_s}\dot{\bar{T}}_i\dot{u}_i\,dS=-\dot{P}\dot{U}(l,t)=0 \qquad (P \text{ is constant})
\end{aligned}\right\} \tag{25}$$

where $U(0, t)=0$. The special form of I for the column is then

$$I=\int_V\left[\dot{\sigma}\left(\frac{\partial \dot{U}}{\partial x}+\frac{\partial W}{\partial x}\frac{\partial \dot{W}}{\partial x}-z\frac{\partial^2 \dot{W}}{\partial x^2}\right)+\frac{1}{2}\sigma\left(\frac{\partial \dot{W}}{\partial x}\right)^2-\frac{\dot{\sigma}^2}{2E}-\lambda p t^{p-1}\dot{\sigma}\sigma^m\right]dV \tag{26}$$

For simplicity, the variation of σ in the z-direction is assumed to be linear; thus,

$$\sigma=\sigma_0^*+\frac{z}{h}\sigma_1^* \tag{27}$$

The variation of displacements and stresses in the x-direction is assumed as follows:

$$\left.\begin{aligned}
&W=hW_0\sin\frac{\pi x}{l}\\
&U=U_0 x\\
&\sigma_0^*=\frac{P}{bh}\sigma_0\\
&\sigma_1^*=\frac{P}{bh}\sigma_1\sin\frac{\pi x}{l}
\end{aligned}\right\} \tag{28}$$

where h is the thickness of the column, b is the width, and l is the length. The dimensionless quantities on the right-hand sides of equations (28) are functions of time alone. The integrations in I may be carried out, and the result is (for $m=3$)

$$I=\frac{P^2 l}{bhE}\left[\frac{P_c}{P}\left(6\dot{\sigma}_0W_0\dot{W}_0+\frac{1}{2}\dot{\sigma}_1\dot{W}_0+3\sigma_0\dot{W}_0^2\right)-\frac{1}{2}\left(\dot{\sigma}_0^2+\frac{1}{24}\dot{\sigma}_1^2\right)+\frac{bhE}{P}\dot{\sigma}_0\dot{U}_0-\lambda p t^{p-1}E\left(\frac{P}{bh}\right)^2\left(\sigma_0^3\dot{\sigma}_0+\frac{1}{8}\sigma_0\sigma_1^2\dot{\sigma}_0+\frac{1}{8}\sigma_0^2\sigma_1\dot{\sigma}_1+\frac{3}{640}\sigma_1^3\dot{\sigma}_1\right)\right] \tag{29}$$

where P_c is the buckling load of the column. The system of

differential equations to which the present approximate analysis leads is obtained by equating to zero the partial derivatives of I with respect to each of the dotted quantities; thus, the result is

$$\left.\begin{aligned}
&\dot{\sigma}_0=0\\
&6\dot{\sigma}_0W_0+\frac{1}{2}\dot{\sigma}_1+6\sigma_0\dot{W}_0=0\\
&6\frac{P_c}{P}W_0\dot{W}_0-\dot{\sigma}_0+\frac{bhE}{P}\dot{U}_0-\lambda pt^{p-1}E\left(\frac{P}{bh}\right)^2\left(\sigma_0^3+\frac{1}{8}\sigma_0\sigma_1^2\right)=0\\
&\frac{1}{2}\frac{P_c}{P}\dot{W}_0-\frac{1}{24}\dot{\sigma}_1-\lambda pt^{p-1}E\left(\frac{P}{bh}\right)^2\left(\frac{1}{8}\sigma_0^2\sigma_1+\frac{3}{640}\sigma_1^3\right)=0
\end{aligned}\right\}\quad(30)$$

The solution of this set of equations depends on the initial conditions assigned. Suppose that the column has an initial bow in the form of a half sine wave before the load P is applied. If the load is assumed to be applied rapidly, but not rapidly enough to introduce inertia effects, then the initial conditions for the creep problem are those existing immediately after the load is applied. If the initial bow is given by

$$h\Delta\sin\frac{\pi x}{l}$$

the initial conditions for the dimensionless quantities are

$$\left.\begin{aligned}
W_0(0)&=\frac{\Delta}{1-\frac{P}{P_c}}\\
\sigma_0(0)&=-1\\
\sigma_1(0)&=\frac{12\Delta}{1-\frac{P}{P_c}}
\end{aligned}\right\}\quad(31)$$

The problem can now be reduced to solving the following equation for W_0:

$$\left(\frac{P_c}{P}-1\right)\dot{W}_0-3\lambda pt^{p-1}E\left(\frac{P}{bh}\right)^2\left(W_0+\frac{27}{5}W_0^3\right)=0\quad(32)$$

Except for differences in notation, this equation is similar to one given by Kempner (eq. (27) of ref. 10) for an idealized two-element column problem solved by a collocation method, except that the constant $^{27}/_{5}$ is replaced by $^{1}/_{3}$ and p is replaced by 1. Equation (32) is easily integrated to give

$$t^p=\frac{\frac{P_c}{P}-1}{6\lambda E\left(\frac{P}{bh}\right)^2}\log\left[\frac{W_0^2}{1+\frac{27}{5}W_0^2}\,\frac{1+\frac{27}{5}W_0^2(0)}{W_0^2(0)}\right]\quad(33)$$

The collapse time t_c is found by taking the limit as $W_0\to\infty$; thus,

$$t_c=\left\{\frac{\frac{P_c}{P}-1}{6\lambda E\left(\frac{P}{bh}\right)^2}\log\left[1+\frac{5\left(1-\frac{P}{P_c}\right)^2}{27\Delta^2}\right]\right\}^{1/p}\quad(34)$$

The foregoing analysis is intended merely as an example; more elaborate assumptions as to the stress variation through the thickness and the variation of the several unknowns along the length of the column lead to systems of nonlinear differential equations which may be solved by some numerical method.

EXAMPLE OF APPLICATION OF VARIATIONAL THEOREM TO CREEP BENDING OF PLATES

For a second example, the bending of a simply supported circular plate under a constant uniform load is considered. (See fig. 2.) For simplicity, the analysis is restricted to the time during which the deflections are small so that the linear strain-displacement relations can apply. The general form for I in this case is

$$I=\int_V\left[\dot{\epsilon}_{ij}\dot{\sigma}_{ij}-\frac{1}{2}(\dot{\epsilon}'_{ij}+2\dot{\epsilon}''_{ij})\dot{\sigma}_{ij}\right]dV\quad(35)$$

Here, again, the effects of plasticity are neglected. The creep law is that given by equation (1). The various terms in the integrand must be specialized to apply to the present plate problem. In polar coordinates the shear stress and shear strain are zero from symmetry, and the remaining stresses

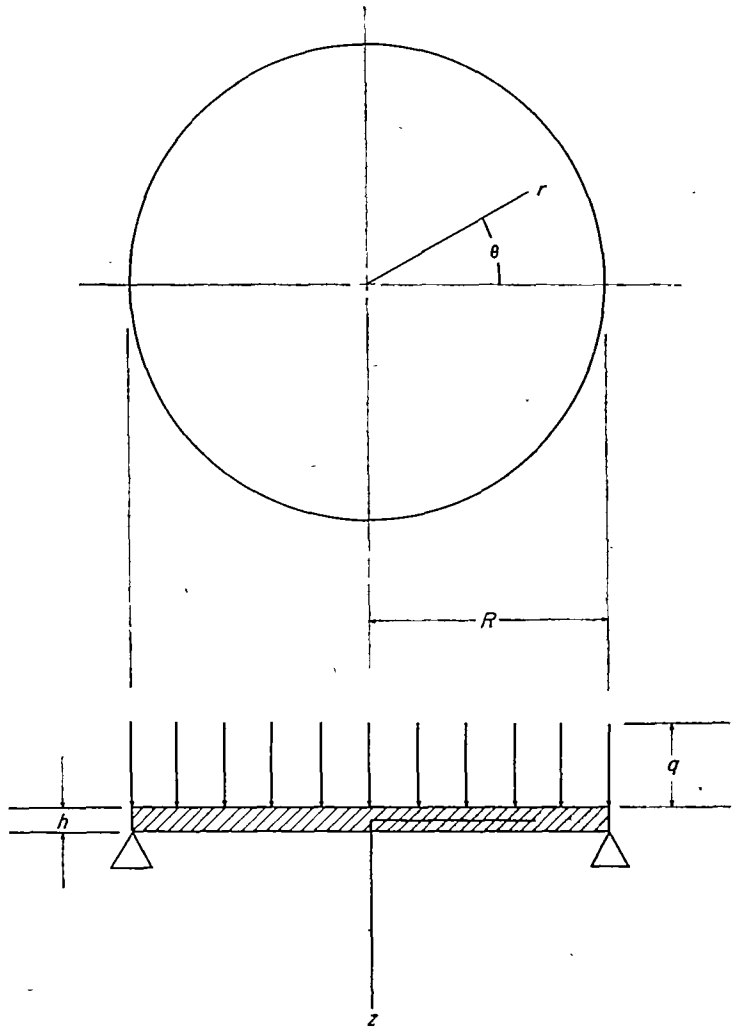

FIGURE 2.—Simply supported circular plate with lateral load.

and strains give

$$\dot{\epsilon}_{ij}\dot{\sigma}_{ij}=\dot{\epsilon}_r\dot{\sigma}_r+\dot{\epsilon}_t\dot{\sigma}_t \tag{36}$$

If a linear strain distribution through the thickness is assumed,

$$\dot{\epsilon}_{ij}\dot{\sigma}_{ij}=-z\frac{\partial^2\dot{W}}{\partial r^2}\dot{\sigma}_r-\frac{z}{r}\frac{\partial\dot{W}}{\partial r}\dot{\sigma}_t \tag{37}$$

For the elastic part of the second term in equation (35)

$$\frac{1}{2}\dot{\epsilon}'_{ij}\dot{\sigma}_{ij}=\frac{1}{2E}(\dot{\sigma}_r^2+\dot{\sigma}_t^2-2\mu\dot{\sigma}_r\dot{\sigma}_t) \tag{38}$$

For the creep part of the second term,

$$\dot{\epsilon}''_{ij}\dot{\sigma}_{ij}=f(J_2)s_{ij}\dot{\sigma}_{ij}=f(J_2)\dot{J}_2 \tag{39}$$

Further, it is assumed that the form of f is such that

$$\dot{\epsilon}''_{ij}\dot{\sigma}_{ij}=\lambda J_2^m\dot{J}_2 \tag{40}$$

In this example, the exponent m is taken to be unity; this assumption corresponds to the cubic law in the uniaxial stress case. Then,

$$\dot{\epsilon}''_{ij}\dot{\sigma}_{ij}=\frac{1}{9}\lambda(\sigma_r^2+\sigma_t^2-\sigma_r\sigma_t)[\dot{\sigma}_r(2\sigma_r-\sigma_t)+\dot{\sigma}_t(2\sigma_t-\sigma_r)] \tag{41}$$

The variation of the stresses through the thickness is assumed to be linear; thus,

$$\left.\begin{aligned}\sigma_r&=\frac{12M_rz}{h^3}\\ \sigma_t&=\frac{12M_tz}{h^3}\end{aligned}\right\} \tag{42}$$

Doubtless, after creep is well established, the stress distribution cannot actually be linear in the thickness direction, but, for purposes of this example, such an approximation is sufficient. When integration in the z-direction is carried out,

$$\begin{aligned}I=-\int_0^{2\pi}\int_0^1\Big\{&\rho\dot{M}_rW''+\dot{M}_tW''+\frac{6R^2\rho}{Eh^3}(\dot{M}_r^2+\dot{M}_t^2-\\&2\mu\dot{M}_r\dot{M}_t)+\frac{144}{5}\frac{\lambda R^2\rho}{h^7}(M_r^2+M_t^2-M_rM_t)[\dot{M}_r(2M_r-\\&M_t)+\dot{M}_t(2M_t-M_r)]\Big\}d\rho\,d\theta\end{aligned} \tag{43}$$

where R is the radius of the plate, $\rho=r/R$, and the primes denote differentiation with respect to ρ. The following expressions, based on the elastic solution for this problem, are assumed for the displacements and moments:

$$\left.\begin{aligned}W&=h(1-\rho^2)(W_0+\rho^2W_1)\\ M_r&=Eh^2M_{r,0}(1-\rho^2)\\ M_t&=Eh^2(M_{t,0}+\rho^2M_{t,1})\end{aligned}\right\} \tag{44}$$

Equations (44) are substituted into equation (43) and the integrations carried out. Then, on equating to zero the partial derivatives with respect to the dotted quantities, the following equations are obtained:

$$\left.\begin{aligned}&\dot{M}_{r,0}+2\dot{M}_{t,0}+\dot{M}_{t,1}=0\\ &3\dot{M}_{r,0}+\dot{M}_{t,1}=0\\ &\dot{W}_0+\dot{W}_1-2\left(\frac{R}{h}\right)^2[2\dot{M}_{r,0}-\mu(3\dot{M}_{t,0}+\dot{M}_{t,1})]\\ &\qquad=2\frac{144\lambda E^3}{5}\left(\frac{R}{h}\right)^2I_1\\ &\dot{W}_0-3\left(\frac{R}{h}\right)^2(2\dot{M}_{t,0}+\dot{M}_{t,1}-\mu\dot{M}_{r,0})=\frac{144\lambda E^3}{5}\left(\frac{R}{h}\right)^2I_2\\ &3\dot{W}_0+\dot{W}_1-6\left(\frac{R}{h}\right)^2(3\dot{M}_{t,0}+2\dot{M}_{t,1}-\mu\dot{M}_{r,0})\\ &\qquad=6\frac{144\lambda E^3}{5}\left(\frac{R}{h}\right)^2I_3\end{aligned}\right\} \tag{45}$$

where

$$\left.\begin{aligned}(Eh^2)^3I_1&=\int_0^1\rho(1-\rho^2)(2M_r-M_t)(M_r^2-M_rM_t+M_t^2)d\rho\\ (Eh^2)^3I_2&=\int_0^1\rho(2M_t-M_r)(M_r^2-M_rM_t+M_t^2)d\rho\\ (Eh^2)^3I_3&=\int_0^1\rho^3(2M_t-M_r)(M_r^2-M_rM_t+M_t^2)d\rho\end{aligned}\right\} \tag{46}$$

Equations (45) can be solved for the five dotted quantities to give

$$\left.\begin{aligned}\dot{W}_0&=\frac{144\lambda E^3}{5}\left(\frac{R}{h}\right)^2\left[I_2-\frac{3(1+\mu)}{8}(3I_3-I_1-I_2)\right]\\ \dot{W}_1&=\frac{144\lambda E^3}{5}\left(\frac{R}{h}\right)^2\left[\frac{3}{2}(I_1-I_2+I_3)+\right.\\ &\qquad\left.\frac{3(1+\mu)}{8}(3I_3-I_1-I_2)\right]\\ \dot{M}_{r,0}&=\dot{M}_{t,0}=-\frac{1}{3}\dot{M}_{t,1}=\frac{18\lambda E^3}{5}(3I_3-I_1-I_2)\end{aligned}\right\} \tag{47}$$

where the expressions for I_1, I_2, and I_3 are

$$\left.\begin{aligned}I_1&=\frac{1}{40}(3M_{t,0}^3-3M_{t,0}^2M_{t,1}-3M_{t,0}M_{t,1}^2-M_{t,1}^3)\\ I_2&=\frac{5}{40}(5M_{t,0}^3+9M_{t,0}^2M_{t,1}+7M_{t,0}M_{t,1}^2+2M_{t,1}^3)\\ I_3&=\frac{1}{40}(14M_{t,0}^3+32M_{t,0}^2M_{t,1}+27M_{t,0}M_{t,1}^2+8M_{t,1}^3)\end{aligned}\right\} \tag{48}$$

Equations (47) are a system of first-order nonlinear differential equations with time as the independent variable. The initial conditions required to determine the solution are given by the elastic solution to the loaded plate. (See ref. 11.)

Thus,

$$\left.\begin{aligned}
W_0(0)&=\frac{q}{E}\left(\frac{R}{h}\right)^4\frac{3(5+\mu)(1-\mu)}{16}\\
W_1(0)&=-\frac{q}{E}\left(\frac{R}{h}\right)^4\frac{3(1-\mu^2)}{16}\\
M_{r,0}(0)&=M_{t,0}(0)=\frac{q}{E}\left(\frac{R}{h}\right)^2\frac{3+\mu}{16}\\
M_{t,1}(0)&=-\frac{q}{E}\left(\frac{R}{h}\right)^2\frac{1+3\mu}{16}
\end{aligned}\right\}\tag{49}$$

Since $\dot{M}_{r,0}=M_{t,0}$ and $M_{r,0}(0)=M_{t,0}(0)$, it follows that $M_{r,0}=M_{t,0}$. Equations (47) with initial conditions of equations (49) can be integrated numerically by the modified Euler method (ref. 12). Numerical calculations were made for a plate having a ratio of radius to thickness of 50. The value of E used was 7.4×10^6 psi and the value of λE^3 used was 2.72×10^6 per hour. These values together with the cubic uniaxial creep law correspond approximately to characteristics of 2024–T3 aluminum alloy at a temperature of 600° F. (See ref. 2.) Results showing the time history of the maximum deflection of a circular plate under lateral load are presented in figure 3.

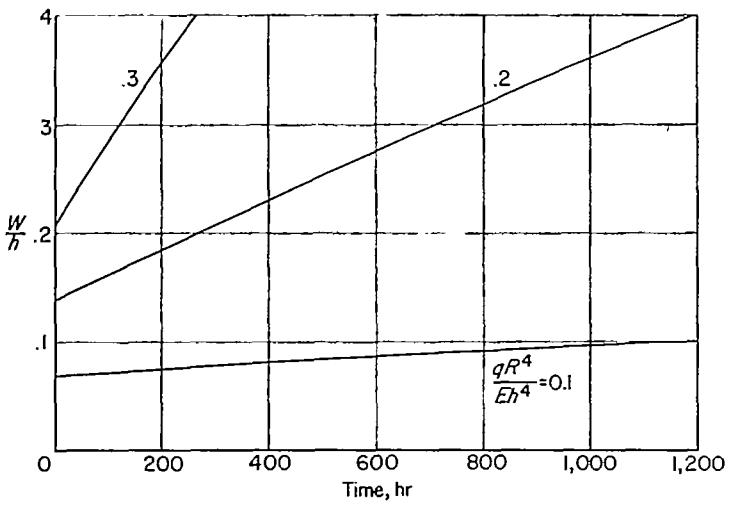

FIGURE 3.—Time history of maximum deflection of simply supported circular plate under lateral load. $\frac{R}{h}=50$; material, 2024–T3 aluminum alloy at 600° F.

CONCLUDING REMARKS

A variational theorem for creep has been formulated which is an extension of a variational theorem developed by Reissner. Various systems of equations leading to approximate solutions to problems of the creep behavior of plates, columns, beams, and shells may be obtained by using direct methods of the calculus of variations in conjunction with the stated theorem. The application of the theorem is illustrated for plates and columns by the solution of two sample problems.

LANGLEY AERONAUTICAL LABORATORY,
NATIONAL ADVISORY COMMITTEE FOR AERONAUTICS,
LANGLEY FIELD, VA., *March 5, 1957.*

REFERENCES

1. Hoff, N. J.: Approximate Analysis of Structures in the Presence of Moderately Large Creep Deformations. Quarterly Appl. Math., vol. XII, no. 1, Apr. 1954, pp. 49–55.
2. Hoff, N. J.: Rapid Creep in Structures. Jour. Aero. Sci., vol. 22, no. 10, Oct. 1955, pp. 661–672, 700.
3. Wang, Alexander, J., and Prager, William: Thermal and Creep Effects in Work-Hardening Elastic-Plastic Solids. Jour. Aero. Sci., vol. 21, no. 5, May 1954, pp. 343–344, 360.
4. Reissner, Eric: On a Variational Theorem in Elasticity. Jour. Math. and Phys., vol. XXIX, no. 2, July 1950, pp. 90–95.
5. Reissner, Eric: On a Variational Theorem for Finite Elastic Deformations. Jour. Math. and Phys., vol. XXXII, nos. 2–3, July–Oct. 1953, pp. 129–135.
6. Hill, R.: The Mathematical Theory of Plasticity. The Clarendon Press (Oxford), 1950, p. 61.
7. Trefftz, E.: Über die Ableitung der Stabilitätskriterien des Elastischen Gleichgewichtes aus der Elastizitätstheorie Endlicher Deformationen. Proc. Third Int. Cong. Appl. Mech. (Stockholm, Sweden, Aug. 24–29, 1930), vol. III, P. A. Norstedt & Söner (Stockholm), 1931, pp. 44–50.
8. Novozhilov, V. V.: Foundations of the Nonlinear Theory of Elasticity. Graylock Press (Rochester, N. Y.), 1953, pp. 61–93.
9. Reissner, Eric: On Bending of Elastic Plates. Quarterly Appl. Math., vol. V, no. 1, Apr. 1947, pp. 55–68.
10. Kempner, Joseph: Creep Bending and Buckling of Nonlinearly Viscoelastic Columns. NACA TN 3137, 1954.
11. Timoshenko, S.: Theory of Plates and Shells. McGraw-Hill Book Co., Inc., 1940, p. 62.
12. Scarborough, James B.: Numerical Mathematical Analysis. Second ed., The Johns Hopkins Press (Baltimore), 1950, pp. 235–240.