REPORT 1345

CONTENTS

	Page
SUMMARY	143
INTRODUCTION	143
SYMBOLS	144
AERODYNAMIC FORCES RESULTING DIRECTLY FROM ATMOSPHERIC TURBULENCE	145
Definitions of Statistical Parameters	146
Lift-Influence Functions in Unsteady Flow	147
Mean-Square Lift and Its Spectral Resolution for the Unswept Wing	147
Basic equations	147
Two alternative approaches	148
Results of calculations	149
Mean-Square Lift of the Swept Wing	151
Mean-Square Rolling Moment	152
Generalized Aerodynamic Influence Functions in Unsteady Flow	153
Mean-Square Bending and Pitching Moments	155
Wing-Tail Correlation Effects	157
DYNAMICS OF THE RIGID AIRPLANE	158
Equations of Longitudinal Motion	158
Solution of the Equations of Longitudinal Motion	160
Transfer functions	160
Normal-acceleration spectrum and mean-square value	160
Bending-moment spectrum and mean-square value	161
Special Problems Related to the Longitudinal Motion of Large Airplanes	162
Single-degree-of-freedom case	162
Two-degree-of-freedom case	163
Special Problems Related to the Lateral Motion of Large Airplanes	163
Combination of the Results Obtained From Analyses of the Longitudinal and Lateral Degrees of Freedom	164
DYNAMICS OF THE SMALL FLEXIBLE AIRPLANE	165
Loads Applied to the Wing	165
Loads Applied to the Tail	167
Wing and Tail Deformations	168
Equations of Motion	169
Solution of the Equations of Motion	170
DYNAMICS OF THE LARGE FLEXIBLE AIRPLANE	171
Extension of the Statistical Approach	171
Calculation of the Required Transfer Functions	174
DISCUSSION	176
Some Implications of the Assumptions Concerning the Nature of Atmospheric Turbulence	176
Considerations Pertinent to the Application of Stationary-Random-Process Techniques to Gust-Load Problems	177
CONCLUDING REMARKS	177
REFERENCES	178

REPORT 1345

THE RESPONSE OF AN AIRPLANE TO RANDOM ATMOSPHERIC DISTURBANCES[1]

By Franklin W. Diederich

SUMMARY

The statistical approach to the gust-load problem which consists in considering flight through turbulent air to be a stationary random process is extended by including the effect of lateral variation of the instantaneous gust intensity on the aerodynamic forces. The forces obtained in this manner are used in dynamic analyses of rigid and flexible airplanes free to move vertically, in pitch, and in roll. The effect of the interaction of longitudinal, normal, and lateral gusts on the wing stresses is also considered.

The method of analyzing the rigid-body motions is similar to that used for analyses of the dynamic stability of airplanes, in that the equations of motion are referred to stability axes and expressed in terms of conventional stability derivatives. The method of analyzing the dynamic effects of structural flexibility consists in an extension of a numerical-integration approach to the static aeroelastic problem and is in a form which offers the possibility of calculating divergence and flutter speeds with relatively little additional effort.

The mean-square values, correlation functions, and power spectra of some of the aerodynamic forces required in this type of analysis are calculated for one special correlation function of the atmospheric turbulence. It is shown, for instance, that if the span is relatively large compared with the integral scale of turbulence, the mean-square lift and root bending moment directly due to the gust are substantially reduced when the differences in instantaneous intensity of the turbulence along the span are taken into account. However, if the motions of the airplane are taken into account the mean-square root bending moment may be increased as a result of these differences. Also, the mean-square pitching moment is shown to be substantially increased if the tail length is relatively large compared with the scale of turbulence. Finally, the wing stresses due to longitudinal, normal, and lateral gusts are shown to be statistically independent under certain conditions.

INTRODUCTION

The local velocity fluctuations acting on an airplane flying through atmospheric turbulence are functions of time defined only in a statistical sense and, hence, constitute a stochastic or random process. Consequently, the responses of the airplane, whether they are motions (linear or angular displacement, velocities, or accelerations), forces (lift, pitching moment, bending moment, and so on), stresses, or any other phenomena determined by the turbulence, can also be known as functions of time in only a statistical sense.

This report is concerned with the statistical characteristics of those responses which have a bearing on the loads and stresses experienced by the airplane; although other problems such as those relating to passenger comfort or to the stability of the airplane as a gun platform can be treated in the same manner, they will not be considered here.

The first approaches to the gust-load problem which use the statistical techniques developed for stationary random processes appear to be those of references 1, 2, and 3. (An earlier investigation concerned with the motions of an airplane in turbulent air is reported in ref. 4.) The fundamentals of these approaches are discussed in some detail in reference 1, and mention is made therein of investigations in other fields of engineering and physics that have dealt with the problem of deducing the statistical characteristics of the output or response of a dynamic system from those of its input. The mean-square normal acceleration of a rigid airplane free to move in one degree of freedom, namely, vertical motion, is calculated in reference 2. In addition to being rigid, the airplane is implicitly assumed to be small enough for all its components to experience the same gust velocity at any instant of time. This means that the span of the airplane must be small compared with the integral scale of atmospheric turbulence, which on the basis of the available knowledge concerning the properties of the atmosphere (ref. 4, for instance) appears to be in the order of several hundred to 1,000 or 2,000 feet; that is, the span of the airplane must be less than about 100 feet.

The purpose of the present report is to extend this approach to large flexible airplanes free to move in all directions. As used herein, the terms "small" and "large" airplane refer to airplanes which are very small and not very small, respectively, compared with the integral scale of turbulence; thus, an airplane flying in a wide variety of atmospheric conditions may be "small" under certain conditions and "large" under others. Similarly, the terms "rigid" airplane and "flexible" airplane are used to designate airplanes flying, respectively, at speeds far below those at which dynamic and aeroelastic effects become important, and at speeds at which these effects have to be taken into account; the same airplane can thus be "rigid" under some conditions and "flexible" under others.

[1] Supersedes NACA Technical Note 3910 by Franklin W. Diederich, 1957. This report represents, except for some minor changes, a thesis submitted in May 1954 in partial fulfillment of the requirements for the degree of Doctor of Philosophy at the California Institute of Technology, Pasadena, Calif.

Several fundamental assumptions are inherent in the analysis contained in this report. In the first place, all atmospheric disturbances, motions, and structural deformations are assumed to be small enough to produce forces that are linear and, hence, superposable. Also, the turbulent "input" to the airplane is assumed to be stationary in a statistical sense; that is, the turbulence in the plane of the flight path is homogeneous. For the large airplane, the additional assumption is made that the turbulence is axisymmetric with respect to vertical axes, a condition less severe than complete isotropy. The statistical characteristics of the turbulence are thus assumed to be invariant under a translation of the space origin within the horizontal plane and under a rotation of the coordinates about the vertical axis. Finally, Taylor's hypothesis to the effect that time displacements are equivalent to longitudinal space displacements is assumed to be valid.

The aerodynamic forces directly due to atmospheric turbulence, which constitute the input forces for the dynamic system represented by the airplane, are calculated in the first part of this report for the large airplane, that is, for the case where the spanwise distribution of the intensity of turbulence has to be taken into account. (The effect of spanwise variation of gust intensity on the lift has been treated by a slightly different method in ref. 5.)

The dynamics of the rigid airplane are considered in the second part. The dynamic system is now represented by a set of three simultaneous ordinary differential equations, rather than one as in reference 2; nonetheless, the problem of calculating the required transfer functions is still one of simple algebra.

The next part is concerned with the small flexible airplane and thus has direct application to fighter-type airplanes and guided missiles operating at relatively high speeds, in addition to serving as a preliminary to the last part of the report. The dynamic system is now represented by a partial differential equation, and the calculation of the transfer functions requires the solution of ordinary differential equations. Once these functions are calculated, however, the statistical techniques are the same as before, as a result of the fact that the lateral variation in gust intensity is ignored. Either modal or numerical-integration approaches may be used to analyze the dynamics of a swept-wing airplane with arbitrary stiffness and mass distribution. Although modal approaches have usually been preferred in the past for similar problems, it was believed that, in view of the highly complex nature of modern aircraft structures and the advanced type of computing machinery required and generally available for their analysis, the numerical-integration approach would be preferable and it has, therefore, been used.

The last part contains the analysis of the large flexible airplane. The statistical problem is now that of a system which is characterized by a partial differential equation with time and a space coordinate as independent variables and which is subjected to a random input that varies in time and space, so that more is required than the transfer functions from the gust intensity at one point on the wing to the stresses at another. The particular statistical problem presented by this case is considered in some detail, and the appropriate transfer functions are then obtained by using the numerical-integration approach presented in the preceding part to solve, in effect, the ordinary differential equations which describe the wing deformations at any given frequency.

SYMBOLS

A	aspect ratio
b	span
$C(k)$	Theodorsen function
C_L	lift coefficient, L/qS
C_{L_α}	lift-curve slope
C_l	rolling-moment coefficient, L'/qSb
C_{l_p}	coefficient of damping in roll, defined as positive for positive damping
C_{m_q}	damping-in-pitch derivative
C_{m_α}	static pitching derivative
c	chord, parallel to plane of symmetry
$\bar{c}$	average chord, S/b
c_l	section lift coefficient at station y, l/qc
EI	bending stiffness
e_1	distance from section aerodynamic center to shear center, fraction of chord
e_2	distance from shear center to section center of gravity, fraction of chord
e_3	distance from shear center to the midchord point, fraction of chord
e_4	distance from shear center to the ¾-chord point, fraction of chord
$G(y, \eta)$	dimensionless lift-influence function (Green's function for the spanwise lift distribution)
GJ	torsional stiffness
g	acceleration due to gravity
$H(\omega)$	response to sinusoidal oscillation, Fourier transform of $h(t)$
$h(t)$	indicial-response function
I_x	mass moment of inertia about X-axis
I_y	mass moment of inertia about Y-axis
J_0, J_1	Bessel functions of the first kind, order 0 and 1
K_0, K_1	modified Bessel functions of the second kind, order 0 and 1
Ki_0	integral of K_0
k	reduced frequency, $\omega\bar{c}/2U$
k'	dimensionless frequency, $\omega L^*/U$
L	lift
L'	rolling moment
L^*	integral scale of turbulence
l	distributed lift per unit distance along the span
M	pitching moment
M_B	bending moment
M_T	twisting moment
m	mass (of airplane, unless designated otherwise by subscripts)
$\tilde{m}$	distributed mass per unit distance along the span
m_T	distributed twisting moment (about axes perpendicular to the plane of symmetry) per unit distance along the span
q	dynamic pressure

r radius of gyration about center of gravity; longitudinal displacement corresponding to time displacement τ
S wing area
s scale parameter, $\frac{L^*}{\bar{c}/2}$
t time
U mean flying speed
u longitudinal component of gust velocity
u_p horizontal component of disturbed motion
v lateral component of gust velocity
W weight of airplane
w vertical component of gust velocity
w_p vertical component of disturbed motion
x coordinate along mean flight path
Δx distance from intersection of elastic axis and root chord to airplane center of gravity
x_t tail length, distance from airplane center of gravity to aerodynamic center of tail
x_t' modified tail length, distance from intersection of elastic axis and root chord to aerodynamic center of tail
y coordinate perpendicular to plane of symmetry
z coordinate in plane of symmetry perpendicular to mean flight path; vertical deflection
α inclination of chord to X-axis
β span ratio, b/L^*
$\Gamma(\eta)$ autoconvolution function for $\gamma(y)$
$\gamma(y)$ dimensionless lift distribution, $cc_l/\bar{c}C_L$
$\gamma'(y)$ dimensionless lift distribution in roll, $cc_l/\bar{c}C_{l_p}$
η variable of integration corresponding to y
θ angle of pitch
Λ angle of sweepback
ρ mass density of the air
τ time displacement, argument of time-correlation function
Φ the power spectrum $\tilde{\Phi}$ in the case of axisymmetry
$\tilde{\Phi}$ two-dimensional power spectrum (double Fourier transform of $\tilde{\psi}$)
$\phi(k)$ Sears function (unsteady-lift function for gust penetration)
φ one-dimensional or point power spectrum
$\tilde{\varphi}$ two-dimensional power spectrum (single Fourier transform of $\tilde{\psi}$)
ψ one-dimensional or point correlation function
$\tilde{\psi}$ two-dimensional correlation function
ω frequency of oscillation

Subscripts:

e,ϵ effective
f fuselage
r wing root
t tail
u horizontal component of turbulence
w wing; vertical component of turbulence

Matrix notation:

[ ] square or rectangular matrix
⌊ ⌋ diagonal matrix
[ ] row matrix
{ } column matrix

Dots over symbols indicate derivatives with respect to time.

AERODYNAMIC FORCES RESULTING DIRECTLY FROM ATMOSPHERIC TURBULENCE

The motions of a rigid airplane depend on the overall forces and moments, whereas the stresses of a rigid airplane and the motions and stresses of a flexible airplane depend on the distribution of these forces, as well. This part of the report is concerned with the calculation of the integrated and distributed forces and moments directly due to atmospheric turbulence when the spanwise variation of gust intensity has to be taken into account. (The forces and moments caused by the motions which result from the forces treated in this part can be calculated by conventional methods and will not be considered here, although the combined forces will be considered in the following parts.) Thus, this part serves as a basis for all the material presented in the later parts pertaining to the large airplane, and, hence, the fundamental notions required for an analysis of the large airplane are introduced here and discussed in some detail.

The basic approach is as follows: First, the instantaneous value of the quantity of interest, such as the lift, is expressed in terms of the instantaneous gust intensity at a point and a suitable influence function. For the lift this influence function can and will be identified with a certain lift distribution on the given wing in reverse flow; the same procedure may and, in the case of the rolling moment, will be followed for other integrated forces. On the other hand, for the local lift the influence function is the Green's function for the three-dimensional unsteady-lift problem and cannot be identified with an easily calculated lift distribution on the wing in reverse flow. Inasmuch as no knowledge concerning this function appears to be available, a method of calculating an approximate Green's function for this problem is outlined herein. The required influence functions for integrated effects can be synthesized from this function, and if the associated lift distribution in reverse flow cannot be calculated conveniently this approach may be preferable. This technique is illustrated here by means of the bending moment.

The next step consists in using the expression for the instantaneous value of the given quantity to calculate a correlation function for this quantity in terms of a correlation function of the normal component of the atmospheric turbulence. The power spectrum for the given quantity can then be obtained by taking the Fourier transform of its correlation function. This power spectrum is considered herein to be the desired end result, because the mean-square values of the quantity and its derivatives can be obtained from it, and other statistical parameters of interest can be obtained from these mean-square values. Several alternative approaches for calculating the aforementioned spectrum, either from the correlation function or directly from the spectrum of atmospheric turbulence, are given in connection with the lift and are directly applicable to other quantities as well.

In this part of the report the assumption is made that the influence functions of concern can be written as products of a function of time alone and a function of distance along

the span alone, and advantage is taken of this simplification in calculating the desired spectra. This restriction is removed in the last part of the report, where the influence functions considered cannot be separated into space-dependent and time-dependent constituents, and so the approaches outlined there are generalizations of those presented in this part; they may also be used for the calculation of the spectra of the quantities considered in this part if the assumption concerning the influence functions is not valid.

DEFINITIONS OF STATISTICAL PARAMETERS

As pointed out in the introduction, the intensity of the vertical component of turbulence $w(t)$ is a random process, so that the resulting forces can also be known only in a statistical sense. The purpose of this part is to calculate certain statistical properties of these forces, namely, their mean-square values, their correlation functions, and their power spectra. The fundamental principles involved in statistical analyses of the type considered herein are expounded in some detail, and citations of the literature on the subject are given in references 1 and 2. These fundamentals will therefore not be repeated here. However, both for the sake of ready reference and inasmuch as the statistical terms are not always defined in the same manner, the forms that are used herein are indicated in the succeeding paragraphs.

The time average of a time-dependent quantity is designated by a bar placed over the symbol,[2] and is defined as follows:

$$\bar{\xi} \equiv \lim_{T\to\infty} \frac{1}{2T}\int_{-T}^{T} \xi(t)dt$$

The assumption will always be made that this limit exists and is invariant under a translation of the origin of time. This assumption implies that the processes considered here are stationary in a statistical sense.

The mean of a random process $f(t)$ is defined as its time average, and is always assumed to be zero. In dealing with processes with nonzero mean this analysis is thus pertinent only to the process which consists of the difference between the original process and its mean value. Similarly, the mean-square value of a random process $f(t)$ is defined as the time average of the square of the process, so that

$$\overline{f^2} \equiv \lim_{T\to\infty} \frac{1}{2T}\int_{-T}^{T} f^2(t)\,dt$$

The time-correlation function of $f(t)$ is defined as

$$\psi_f(\tau) \equiv \overline{f(t)f(t+\tau)}$$

so that

$$\overline{f^2} = \psi_f(0)$$

and the power spectrum of $f(t)$ is defined as the Fourier transform of the correlation function:

$$\varphi_f(\omega) = \frac{1}{\pi}\int_{-\infty}^{\infty} e^{-i\omega\tau}\psi_f(\tau)\,d\tau$$
$$= \frac{1}{\pi U}\int_{-\infty}^{\infty} e^{-i\frac{\omega}{U}r}\psi_f\left(\frac{r}{U}\right)dr$$

The second form is the more convenient one when ψ_f represents more nearly a space correlation than a time correlation, so that it depends directly on a space displacement $r \equiv U\tau$ rather than on a time displacement τ. For the purposes of the analysis presented herein, the gust or input correlation functions have this property, so that, for instance, ψ_w may be defined as

$$\psi_w(r) = \overline{w(t)w\left(t+\frac{r}{U}\right)}$$

By virtue of the reciprocal properties of Fourier transforms and the symmetry of $\psi_f(\tau)$, which is a direct consequence of the assumed stationarity of $f(t)$, $\overline{f^2}$ may be expressed in terms of the spectrum of f as

$$\overline{f^2} = \int_0^{\infty} \varphi_f(\omega)\,d\omega \tag{1}$$

If $f(t)$ is the input of a linear system, the power spectrum of the response $x(t)$ of the system is related to the power spectrum of $f(t)$ by

$$\varphi_x(\omega) = |H(\omega)|^2\varphi_f(\omega) \tag{2}$$

where $H(\omega)$ is the transfer function of the system, that is, the complex amplitude of the response of the system to unit sinusoidal input. Hence, $H(\omega)$ is also the Fourier transform of the indicial response $h(t)$ of the system, which is defined herein as the response of the system to a unit impulsive input:

$$H(\omega) = \int_{-\infty}^{\infty} e^{-i\omega t}h(t)dt \tag{3}$$

where the lower limit could be taken as zero, since $h(t)$ is zero for $t<0$. Conversely, $h(t)$ can be obtained from $H(\omega)$ by means of the inverse of equation (3):

$$h(t) = \frac{1}{2\pi}\int_{-\infty}^{\infty} e^{i\omega t}H(\omega)\,d\omega \tag{3a}$$

The mean-square value of the response can then be obtained by integrating its spectrum. Similarly, the mean-square values of the nth time derivative of the response can be obtained from the $(2n)$th moment of the output spectrum. For instance,

$$\overline{\left(\frac{dx}{dt}\right)^2} = \int_0^{\infty} \varphi_x(\omega)\,\omega^2\,d\omega$$

From the mean-square values of these derivatives other statistical quantities of interest, such as the expected number of peaks of the response per unit time, can then be calculated.

[2] When no possibility of confusion exists, a bar is also used to designate a space average, as in the case of $\bar{c}$ and $\bar{y}$. Also, for the components of turbulence the correlation functions depend primarily on space displacements and can be defined by space averages. For the sake of consistency, however, they are considered to be defined by time averages.

LIFT-INFLUENCE FUNCTIONS IN UNSTEADY FLOW

At any time the lift on a wing which results directly from atmospheric disturbances can be expressed for an unswept wing as

$$L(t)=\int_{-\infty}^{\infty} dt_1 \int_{-b/2}^{b/2} h(t_1,y)w(U(t-t_1),y)\,dy \tag{4}$$

where $h(t,y)dy$ is a lift-influence function which represents the lift caused by an impulsive vertical gust of width dy which at time $t=0$ impinges on the wing at station y.

The influence functions required in equation (4) are difficult to calculate directly; methods for obtaining lift distributions on wings of finite span in unsteady flow usually require numerical solutions which do not lend themselves readily to the analysis of angle-of-attack distributions represented by delta functions. However, by virtue of the reciprocity theorems of linearized lifting-surface theory (ref. 6, for instance) the lift influence function for a twisted wing in indicial motion is equal to the lift distribution on that wing during indicial motion in the reverse direction with uniform unit angle of attack. The lift distribution in indicial motion with uniform angle of attack can be calculated relatively easily.

For the few cases for which calculations have been made (namely, some unswept wings), this lift distribution tends to be substantially invariant in time, except for overall magnitude. For instance, the calculations of reference 7 indicate that the lift distribution of an oscillating rectangular or elliptic wing in incompressible flow is substantially independent of frequency, so that in indicial motion it is substantially independent of time. This simplification may not be valid for swept wings.

The lift influence function can then be written as

$$h(t,y)=\frac{1}{b}\,h_L(t)\,\gamma(y) \tag{5}$$

where $\gamma(y)$ defines the steady-state lift distribution for uniform unit angle of attack:

$$\gamma(y)=\frac{cc_l}{\bar{c}C_L}$$

and where $h_L(t)$ describes the variation of the overall magnitude of the lift as a function of time after entry into a sharp-edge gust and may be written as

$$h_L(t)=\frac{C_{L_\alpha}qS}{U}\frac{d}{dt}k_2\left(\frac{Ut}{\bar{c}/2}\right)$$

In turn, k_2 is the lift response to a unit sharp-edge gust normalized to a steady-state value of unity and is, as in the preceding equation, usually expressed in terms of semichord lengths traveled $\frac{Ut}{\bar{c}/2}$. The time derivative is taken here because the response wanted is the one to a unit impulsive gust rather than a sharp-edge gust.

The Fourier transform $H_L(\omega)$ of this function $h_L(t)$ is proportional to a function $\phi(k)$, which may be termed the generalized Sears function because for two-dimensional incompressible flow it is the Sears function:

$$H_L(\omega)=\frac{C_{L_\alpha}qS}{U}\phi(k) \tag{6}$$

where

$$k=\frac{\omega\bar{c}}{2U}$$

The function $H_L(\omega)$ represents the complex amplitude of the lift due to sinusoidal gusts of unit amplitude and is thus the transfer function from the gust to the lift.

Actually, only the absolute square of $\phi(k)$ will be required. For two-dimensional incompressible flow the following approximation is given in reference 1:

$$|\phi(k)|^2\approx\frac{1}{1+2\pi k} \tag{7}$$

This expression has the advantage of simplicity, although it is somewhat in error compared with the absolute square of the Sears function at very low frequencies, a fact which could be remedied by using the approximation

$$|\phi(k)|^2\approx\frac{1+ak}{1+ak(1+2\pi k)}$$

where a is about 15 for a good overall fit to the exact expression. However, the behavior of the Sears function itself at very high frequencies is unrealistic, because its absolute square goes to zero as $1/k$, whereas for any nonzero Mach number and any finite span the absolute square of the generalized Sears function can be shown to tend to zero at least as rapidly as $1/k^2$. As a result of these discrepancies, the approximation given by equation (7) and, for the same reason, the absolute square of the exact Sears function, cannot be used to obtain moments of the lift spectrum, that is, values of the mean-square derivatives of the lift, although they may be adequate for calculating the mean-square value of the lift itself in many cases, particularly when absolute accuracy is not required. Whenever possible the values of $|\phi(k)|^2$ given in reference 8 for the plan form and Mach number of interest should be used.

MEAN-SQUARE LIFT AND ITS SPECTRAL RESOLUTION FOR THE UNSWEPT WING

Basic equations.—The correlation function of the lift can be expressed, by virtue of equation (4), as

$$\psi_L(\tau)=\int_{-\infty}^{\infty}\int_{-\infty}^{\infty}\int_{-b/2}^{b/2}\int_{-b/2}^{b/2} h(t_1,y_1)h(t_2,y_2)\,\overline{w(U(t-t_1),y_1)w(U(t+\tau-t_2),y_2)}\,dy_1dy_2dt_1dt_2 \tag{8}$$

where the averaged product on the right side represents a velocity correlation function. This function depends in general on both space and time displacements. However, if Taylor's hypothesis is made, the time displacements are equivalent to

longitudinal space displacements. The velocity correlation functions are then functions only of longitudinal and lateral space displacements. Thus, for homogeneous turbulence,

$$\overline{w(x+Ut,y)w(x+\xi+U(t+\tau),y+\eta)}=\tilde{\psi}_w(\xi+U\tau,\eta) \tag{9}$$

In addition to Taylor's hypothesis and the assumption of homogeneity, the turbulence is assumed to be axisymmetric with respect to vertical axes, so that $\tilde{\psi}_w(\xi,\eta)$ is a function only of $\sqrt{\xi^2+\eta^2}$. This function is the ordinary space-correlation function ψ_w, so that

$$\tilde{\psi}_w(U\tau+\xi,\eta)=\psi_w(\sqrt{(U\tau+\xi)^2+\eta^2})$$

and, hence,

$$\psi_L(\tau)=\int_{-\infty}^{\infty}\int_{-\infty}^{\infty}\int_{-b/2}^{b/2}\int_{-b/2}^{b/2}h(t_1,y_1)h(t_2,y_2)\psi_w(\sqrt{U^2(\tau+t_1-t_2)^2+(y_2-y_1)^2})dy_1dy_2dt_1dt_2$$

If the assumption implicit in equation (5) is now made, the preceding equation can be written as

$$\psi_L(\tau)=\int_{-\infty}^{\infty}\int_{-\infty}^{\infty}h_L(t_1)\,h_L(t_2)\,\psi_{w_e}(U(\tau+t_1-t_2))\,dt_1\,dt_2 \tag{10}$$

where

$$\psi_{w_e}(U\tau)=\frac{1}{b^2}\int_{-b/2}^{b/2}\int_{-b/2}^{b/2}\psi_w(\sqrt{U^2\tau^2+(y_2-y_1)^2})\gamma(y_1)\,\gamma(y_2)\,dy_1\,dy_2$$

$$=\frac{1}{b}\int_0^b\Gamma(\eta)\,\psi_w(\sqrt{U^2\tau^2+\eta^2})\,d\eta \tag{11}$$

where, in turn, $\Gamma(\eta)$ is an autoconvolution of $\gamma(y)$ defined by

$$\Gamma(\eta)=\frac{2}{b}\int_{-b/2}^{\frac{b}{2}-\eta}\gamma(y)\,\gamma(y+\eta)\,dy \tag{12}$$

The validity of equation (11) can be demonstrated by performing the integration in the y_1,y_2 plane as indicated in the following sketch:

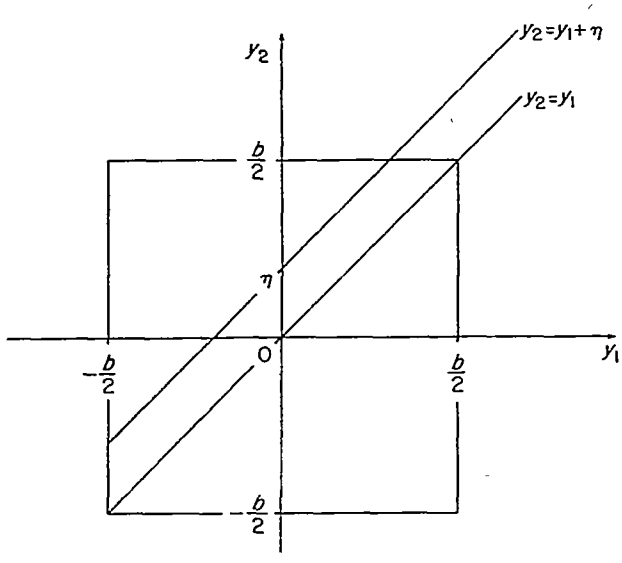

That is, integration is performed first over y_1, with a variable $\eta\equiv y_2-y_1$ held constant. For this integration ψ_w is constant, so that only $\gamma(y_1)$ and $\gamma(y_1+\eta)$ are involved, and the result is a function of η which is one-half of the function $\Gamma(\eta)$ defined by equation (12). The second integration is then performed over η, yielding equation (11) except for a factor of ½. In this process, only the part of the square above the line $y_2=y_1$ is covered. However, by a similar process, the part of the integral corresponding to the part of the plane below this line can be evaluated and shown to be equal to the first part, so that by defining Γ as in equation (12), both parts are taken into account simultaneously in equation (11).

The quantity

$$w_e^2\equiv\psi_{w_e}(0)$$

$$=\frac{1}{b}\int_0^b\Gamma(\eta)\,\psi_w(\eta)\,d\eta$$

may be considered an averaged mean-square vertical component of turbulence; $\psi_{w_e}(U\tau)$ is then the corresponding correlation function, and the Fourier transform of the latter,

$$\varphi_{w_e}(\omega)=\frac{1}{\pi U}\int_{-\infty}^{\infty}e^{-i\frac{\omega}{U}(U\tau)}\,\psi_{w_e}(U\tau)\,d(U\tau) \tag{13}$$

is the corresponding power spectrum.

Once $\varphi_{w_e}(\omega)$ has been obtained, the power spectrum of the lift can be obtained by taking the Fourier transforms of both sides of equation (10). The result is

$$\varphi_L(\omega)=|H_L(\omega)|^2\varphi_{w_e}(\omega) \tag{14}$$

where $H_L(\omega)$ is the transfer function defined in the preceding section. The mean square of the lift can then be obtained by integrating its spectrum, as indicated in equation (1).

Equation (14) has the same form as the corresponding equation for the case where spanwise averaging of the effects of turbulence is not taken into account (see eq. (2) and ref. 1), except that $\varphi_w(\omega)$ is now replaced by $\varphi_{w_e}(\omega)$. Thus, the spectrum of the averaged turbulence must approach that of the unaveraged turbulence when the span approaches zero, as may be seen to be the case from equation (11) and the definitions of $\gamma(y)$ and $\Gamma(\eta)$.

Two alternative approaches.—The defining relations for $\varphi_{w_e}(\omega)$, equations (11) and (13), do not necessarily represent the best method of calculating it in any given case. A slightly different expression appears to be more convenient in general. It consists in substituting equation (11) into equation (13) and inverting the order of integration to yield

$$\varphi_{w_e}(\omega)=\frac{1}{b}\int_0^b\Gamma(\eta)\tilde{\varphi}_w(\omega,\eta)\,d\eta \tag{15}$$

where

$$\tilde{\varphi}_w(\omega,\eta)=\frac{1}{\pi U}\int_{-\infty}^{\infty} e^{-i\frac{\omega}{U}(U\tau)}\psi_w(\sqrt{U^2\tau^2+\eta^2})d(U\tau) \tag{16}$$

so that

$$\tilde{\varphi}_w(\omega,0)=\varphi_w(\omega)$$

A third approach, which has certain advantages over the others, is similar to the one that has been used in reference 5. In this approach the assumption of axisymmetry is not made initially, and use is made of the spectrum

$$\tilde{\Phi}_w(\lambda_1,\lambda_2)=\frac{1}{\pi^2}\int_{-\infty}^{\infty}\int_{-\infty}^{\infty} e^{-i(\lambda_1\xi+\lambda_2\eta)}\tilde{\psi}_w(\xi,\eta)\,d\xi\,d\eta \tag{17a}$$

The correlation function $\psi_{w_e}(U\tau)$ can then be written as

$$\psi_{w_e}(U\tau)=\frac{1}{b^2}\int_{-b/2}^{b/2}\int_{-b/2}^{b/2}\gamma(y_1)\,\gamma(y_2)\,dy_1\,dy_2\,\frac{1}{4}\int_{-\infty}^{\infty}\int_{-\infty}^{\infty} e^{i[\lambda_1 U\tau+\lambda_2(y_2-y_1)]}\,\tilde{\Phi}_w(\lambda_1,\lambda_2)\,d\lambda_1\,d\lambda_2$$

Substitution of this expression into equation (13) and then interchanging the order of integration yields:

$$\varphi_{w_e}(\omega)=\frac{1}{2U}\int_{-\infty}^{\infty}\tilde{\Phi}_w\left(\frac{\omega}{U},\lambda_2\right)|\tilde{\Gamma}(\lambda_2)|^2\,d\lambda_2$$

where

$$\tilde{\Gamma}(\lambda)=\frac{1}{b}\int_{-b/2}^{b/2}\gamma(y)\,e^{-i\lambda y}\,dy$$

and is, as a result of the symmetry of $\gamma(y)$, real and symmetric in λ.

Now, if the turbulence is axisymmetric, $\tilde{\Phi}_w$ depends only on $\lambda\equiv\sqrt{\lambda_1^2+\lambda_2^2}$, that is,

$$\tilde{\Phi}_w(\lambda_1,\lambda_2)=\Phi_w(\sqrt{\lambda_1^2+\lambda_2^2}) \tag{17b}$$

so that the expression for $\varphi_{w_e}(\omega)$ becomes

$$\varphi_{w_e}(\omega)=\frac{1}{U}\int_0^{\infty}\Phi_w\left(\sqrt{\left(\frac{\omega}{U}\right)^2+\lambda^2}\right)\tilde{\Gamma}^2(\lambda)\,d\lambda \tag{18}$$

where $\Phi_w(\lambda)$ is related to $\psi_w(r)$ by

$$\Phi_w(\lambda)=\frac{2}{\pi}\int_0^{\infty} r\,J_0(\lambda r)\,\psi_w(r)\,dr$$

Although the spectra used in the last two approaches have been defined by expressions involving the point correlation function $\psi_w(r)$, they can be expressed equally well in terms of the point spectrum $\varphi_w(\omega)$, so that if, say, an experimentally obtained point spectrum is to be used, it need not be transformed into a correlation function before it can be used in these calculations. The required relations are

$$\tilde{\varphi}_w(\omega,\eta)=\varphi_w(\omega)-\frac{|\eta|}{U}\int_{|\omega|}^{\infty}\varphi_w(\omega_1)\,\frac{\omega_1}{\sqrt{\omega_1^2-\omega^2}}\,J_1\left(\frac{|\eta|\sqrt{\omega_1^2-\omega^2}}{U}\right)d\omega_1 \tag{19}$$

and

$$\Phi_w(\lambda)=-\frac{2U^2}{\pi}\overline{\left|\int_{\lambda U}^{\infty}\varphi(\omega)\,\frac{\omega}{(\omega^2-\lambda^2U^2)^{3/2}}\,d\omega\right.} \tag{20}$$

where the notation $\overline{}$ is used to specify that the finite part of the integral is to be taken, an operation which may be performed by integrating by parts and ignoring the infinite part, so that, in terms of a proper integral,

$$\Phi_w(\lambda)=-\frac{2U^2}{\pi}\int_{\lambda U}^{\infty}\frac{d\varphi_w(\omega)}{d\omega}\,\frac{d\omega}{\sqrt{\omega^2-\lambda^2U^2}}$$

Also, the function $\Phi_w(\lambda)$ can be obtained from $\tilde{\varphi}_w(\omega,\eta)$ by means of either of the relations

$$\Phi_w(\lambda)=\frac{1}{\pi U}\int_{-\infty}^{\infty}e^{-i\lambda\eta}\tilde{\varphi}_w(0,\eta)\,d\eta$$

$$=\frac{2}{\pi U}\int_0^{\infty}\tilde{\varphi}_w(\lambda U,\eta)\,d\eta$$

Results of calculations.—In order to illustrate the magnitude of the effects under consideration, calculations have been made for a uniform loading $\gamma(y)=1$ and a point correlation function which has been used in references 1 and 2 and appears to fit experimental data (ref. 4) fairly well over a large portion of the significant frequency range, namely,

$$\psi_w(r)=\overline{w^2}\left(1-\frac{|r|}{2L^*}\right)e^{-|r|/L^*}$$

so that

$$\varphi_w(\omega)=\frac{\overline{w^2}L^*}{\pi U}\,\frac{1+3k'^2}{(1+k'^2)^2}$$

where L^* is the integral scale of turbulence, which is here defined as

$$L^*=\frac{2}{\overline{w^2}}\int_0^{\infty}\psi_w(r)\,dr$$

and where

$$k'\equiv\frac{\omega L^*}{U}$$

This correlation function has the drawback that the moments of the spectrum associated with it are infinite, so that

it implies a process with infinite mean-square derivatives, but it is quite useful if only the mean-square value of the process itself is of interest.

For uniform loading,

$$\Gamma(\eta)=2\left(1-\frac{\eta}{b}\right)$$

and

$$\tilde{\Gamma}(\lambda)=\frac{\sin\frac{\lambda b}{2}}{\frac{\lambda b}{2}}$$

and for the given correlation function,

$$\tilde{\varphi}_w(\omega,y)=\frac{\overline{w^2}L^*}{\pi U}\left[\frac{y}{L^*}\frac{1+3k'^2}{(1+k'^2)^{3/2}}K_1\left(\frac{y}{L^*}\sqrt{1+k'^2}\right)-\left(\frac{y}{L^*}\right)^2\frac{1}{1+k'^2}K_0\left(\frac{y}{L^*}\sqrt{1+k'^2}\right)\right]$$

where K_0 and K_1 are modified Bessel functions of the second kind, and

$$\Phi_w(\lambda)=\frac{3\overline{w^2}L^{*2}}{\pi U^2}\frac{k'^2}{(1+k'^2)^{5/2}}$$

The mean-square average gust intensity for this case is given by

$$\overline{w_e^2}=\overline{w^2}\,\frac{1-e^{-\beta}}{\beta}$$

where $\beta\equiv b/L^*$, and is shown in figure 1 (a). The correlation function ψ_{w_e} is given by

$$\psi_{w_e}(r)=\frac{\overline{w^2}}{\beta}\left[\sigma\tilde{K}_1\left(\sigma;\ \sinh^{-1}\frac{\beta}{\sigma}\right)-\sigma^2\tilde{K}_0\left(\sigma;\ \sinh^{-1}\frac{\beta}{\sigma}\right)+\frac{\sigma^2}{\beta}\left(e^{-\sigma}-e^{-\sqrt{\sigma^2+\beta^2}}\right)\right]$$

where $\sigma\equiv r/L^*$, and where $\tilde{K}_0(\sigma;\theta)$ and $\tilde{K}_1(\sigma;\theta)$ are incomplete modified Bessel functions of the second kind defined by

$$\tilde{K}_n(\sigma;\theta)\equiv\int_0^\theta \cosh n\vartheta\, e^{-\sigma\cosh\vartheta}\,d\vartheta$$

The spectrum $\varphi_{w_e}(\omega)$ is given by

$$\varphi_{w_e}(\omega)=\frac{\overline{w^2}}{\beta^2}\frac{2L^*}{\pi U}\frac{1}{(1+k'^2)^3}\{3k'^2\beta\sqrt{1+k'^2}\,[Ki_0(\beta\sqrt{1+k'^2})-\beta\sqrt{1+k'^2}K_0(\beta\sqrt{1+k'^2})]+(1-3k'^2)[2-2\beta\sqrt{1+k'^2}K_1(\beta\sqrt{1+k'^2})-\beta^2(1+k'^2)K_0(\beta\sqrt{1+k'^2})]\}$$

where $Ki_0(x)$ is the integral of $K_0(x)$:

$$Ki_0(x)=\int_0^x K_0(x_1)dx_1$$

The functions ψ_{w_e} and φ_{w_e} (normalized with the averaged mean-square turbulent velocity) are shown in figures 2 and 3, respectively. The effect of the span ratio on the normalized correlation function of the averaged turbulence may be seen to be relatively small, so that the effect on the unnormalized correlation function is primarily the decrease in overall level given by the ratio of $\overline{w_e^2}$ to $\overline{w^2}$. A similar statement may be made for the power spectrum. If the power spectrum were not normalized the averaging effect of the span would tend to reduce the intensity of the spectrum at all frequencies, but the high frequencies would be attenuated much more than the low ones, as might be expected. In fact, although the unaveraged spectrum decreases as ω^{-2} at high frequencies, the averaged spectrum decreases as ω^{-3}.

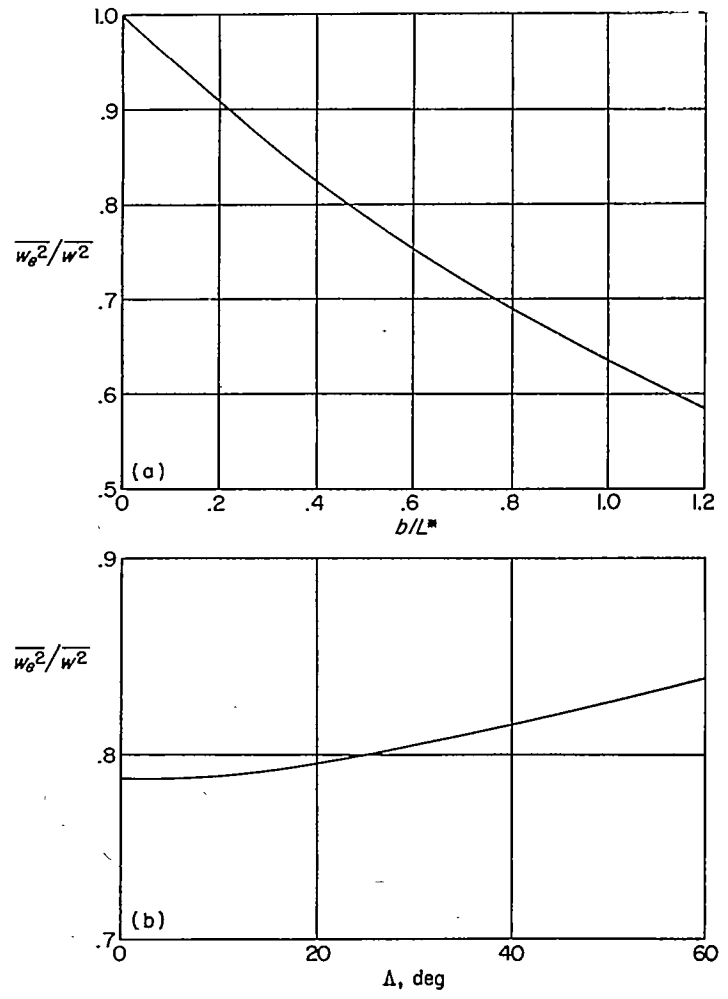

(a) Unswept wings.

(b) Swept wings, $\frac{b}{L^*\cos\Lambda}=0.5$.

FIGURE 1.—The mean-square averaged vertical component of turbulence.

The asymptotic values for $b/L^*\rightarrow\infty$ are shown in figures 2 and 3 in order to indicate the nature of the functions considered here when the scale of turbulence is small compared with the span, as may be the case for a wind-tunnel model responding to natural or artificial tunnel turbulence, or for a buffeting wing or tail surface, although this condition is not of practical concern for the gust-load problem.

The power spectrum of the lift is equal to the product of the power spectrum $\varphi_{w_e}(\omega)$ and the absolute square of the transfer function $H_L(\omega)$, as indicated in equation (14).

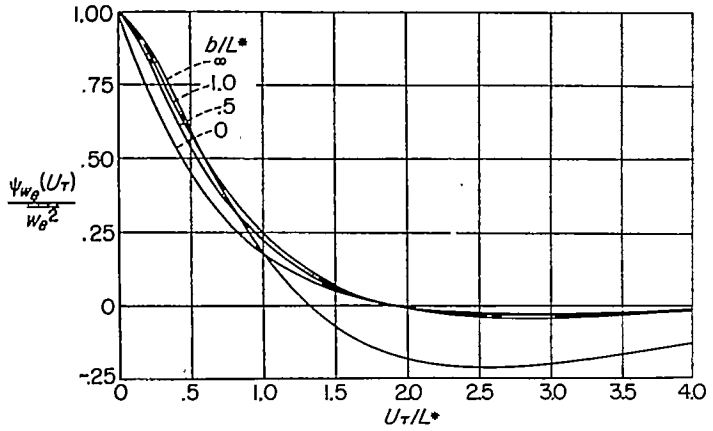

FIGURE 2.—The correlation function of the averaged vertical component of turbulence.

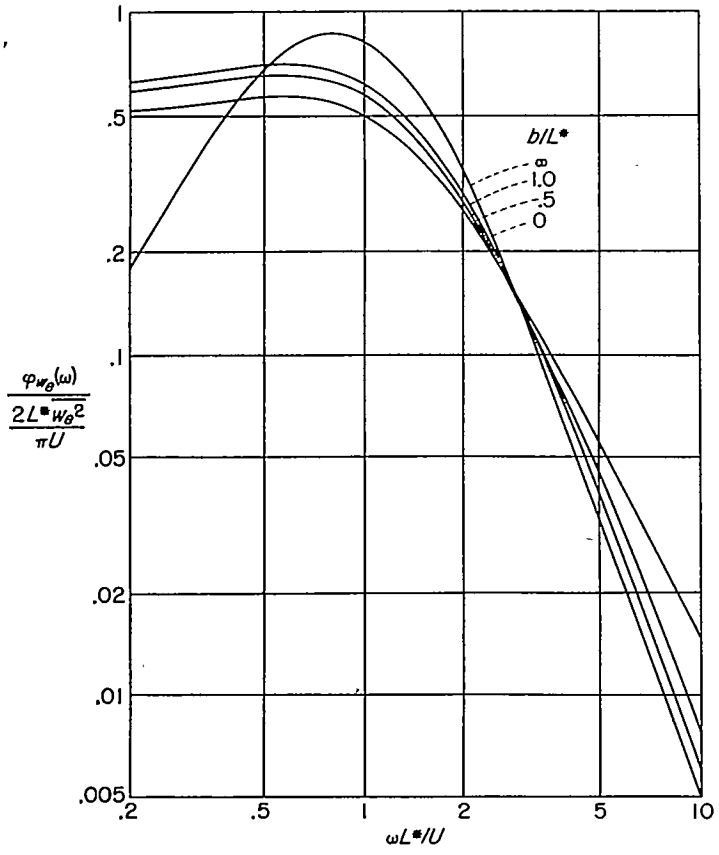

FIGURE 3.—The power spectrum of the averaged vertical component of turbulence.

Inasmuch as this lift is not an end in itself but only one of the parameters that enter into the calculations of the motion of the airplane, its mean-square intensity is of little practical significance; its spectrum is the quantity needed in further calculations. However, if the mean-square intensity is wanted for any reason it can be obtained by integrating the spectrum. Thus, for instance, the approximate expression for $|\phi(k)|^2$ given by equation (7) and the spectrum $\varphi_w(\omega)$ used for the preceding calculation yields the mean-square lift:

$$\overline{(L^2)}_{\beta\to 0}=\left(\frac{C_{L_\alpha}qS}{U}\right)^2\overline{w^2}\,\frac{s}{2\pi^2}\left\{\frac{1+3\left(\frac{s}{2\pi}\right)^2}{\left[1+\left(\frac{s}{2\pi}\right)^2\right]^2}\left(\frac{s}{4}-\log\frac{s}{2\pi}\right)-\frac{\frac{s}{4}-1}{1+\left(\frac{s}{2\pi}\right)^2}\right\}$$

where

$$s\equiv\frac{L^*}{c/2}$$

and, in view of the observation that much of the turbulent energy is contained in a region for which the span has a very small effect on the (normalized) spectrum, this equation should serve to furnish an approximation to the mean-square lift for nonvanishing span, provided $\overline{w_e^2}$ is used instead of $\overline{w^2}$. However, the mean-square values of the derivatives of the lift cannot be calculated in this simple manner, because the deviation of the normalized averaged spectrum from the point spectrum at high frequencies cannot be ignored in calculating the moments of the lift spectrum.

MEAN-SQUARE LIFT OF THE SWEPT WING

For the yawed or sideslipping unswept wing, equations (10) and (14) for the lift-correlation function and spectrum are still valid if an appropriate lift-influence function is used, and if the correlation function for the averaged turbulence is defined by

$$\psi_{w_e}(U\tau)=\frac{1}{b\cos\Lambda}\int_0^{b\cos\Lambda}\Gamma(\eta)\,\psi_w\left(\sqrt{(U\tau+\eta\tan\Lambda)^2+\eta^2}\right)d\eta$$

where $\Gamma(\eta)$ now pertains to a lift-distribution function $\gamma(y)$ which is appropriate for yawed motion and is defined for $-\frac{b}{2}\cos\Lambda\leqq y\leqq\frac{b}{2}\cos\Lambda$. The mean-square averaged intensity of the vertical component of turbulence is then

$$\overline{w_e^2}=\frac{1}{b\cos\Lambda}\int_0^{b\cos\Lambda}\Gamma(\eta)\,\psi_w\left(\frac{\eta}{\cos\Lambda}\right)d\eta$$
$$=\frac{1}{b}\int_0^b\Gamma(\eta'\cos\Lambda)\,\psi_w(\eta')\,d\eta'$$

where $\eta'\equiv\frac{\eta}{\cos\Lambda}$. Thus, this mean-square intensity is unaffected by the yawing process, except for the slight change which results from the change in $\Gamma(\eta)$, although the spectral resolution of the averaged intensity changes in the process.

For the swept wing both y_2-y_1 and $|y_2|-|y_1|$ occur in the integral, so that the reduction of the double integral for $\psi_{w_e}(U\tau)$ to a single integral (see eq. (11)) cannot be affected so simply. The double integral for the swept wing is

$$\psi_{w_e}(U\tau)=\frac{1}{b^2}\int_{-b/2}^{b/2}\int_{-b/2}^{b/2}\gamma(y_1)\,\gamma(y_2)\,\psi_w\left(\sqrt{[U\tau+(|y_2|-|y_1|)\tan\Lambda]^2+(y_2-y_1)^2}\right)dy_1\,dy_2 \tag{21}$$

From this integral, by using rectangular lift distributions and the aforementioned point correlation function, the mean square of the averaged turbulence as well as the corresponding correlation function and power spectrum have been calculated by numerical integration for various sweep angles Λ, the ratio $\frac{\beta}{\cos\Lambda}$ being maintained at 0.5. (The decision to hold $\frac{\beta}{\cos\Lambda}$ rather than β constant was reached as a result of the foregoing analysis of the yawed unswept wing, which indicated that the effects of sweep should be minimized in this manner.) The results for $\overline{w_e^2}$ are shown in figure 1, and the effect of sweep on $\overline{w_e^2}$ is seen to be small for this comparison. The calculated correlation functions and spectra (normalized with respect to $\overline{w_e^2}$) are not shown because they agreed with those for $\Lambda=0$ within less than 1 percent for most values of $U\tau$ and k', respectively.

MEAN-SQUARE ROLLING MOMENT

In the preceding sections the averaging effect of the span has been shown to consist, essentially, in reducing the effective intensity of the turbulence sensed by the wing; thus, it only modifies the forces present on a wing of small span. If the analysis is extended to the rolling moment, however, a new phenomenon appears. When a wing is so small relative to the scale of turbulence that at any instant all of its points experience the same turbulent velocity, the wing experiences no rolling moment as the result of the direct action of turbulence (although it may experience a rolling moment indirectly as a result of the rolling and yawing motion caused by the lateral component of the turbulence). On the other hand, on a large wing the different intensities of the turbulence at different points on the span give rise directly to a net rolling moment, which then results in rolling motion. In this section the mean-square value of this moment is calculated.

At any instant t the rolling moment $L'(t)$ can be written in the same form as the lift $L(t)$ in equation (4); however, according to the previously mentioned reciprocity theorem, the lift-influence function $h(t,y)$ is now the lift distribution for an indicial roll with unit helix angle at the wing tip. If the assumption of invariance of this distribution with time is made, as for the symmetric case (see eq. (5)), then the required lift-influence function can be written as

$$h(t,y)=\frac{1}{b}h'(t)\gamma'(y)$$

where $h'(t)=\frac{C_{l_p}(t)qSb}{2U}$, and where the steady-state lift distribution $\gamma'(y)\equiv\frac{cc_l}{\bar{c}C_l}$ now pertains to a unit linear antisymmetric angle of attack.

The correlation function for the moment can then be written as

$$\psi_{L'}(\tau)=\int_{-\infty}^{\infty}\int_{-\infty}^{\infty}h'(t_1)h'(t_2)\psi_{w_e'}(U(\tau+t_1-t_2))dt_1dt_2 \quad (22)$$

where

$$\psi_{w_e'}(U\tau)=\frac{1}{b^2}\int_{-b/2}^{b/2}\int_{-b/2}^{b/2}\gamma'(y_1)\gamma'(y_2)\psi_w(\sqrt{U^2\tau^2+(y_2-y_1)^2})dy_1dy_2$$

$$=\frac{1}{b}\int_0^b\Gamma'(\eta)\psi_w(\sqrt{U^2\tau^2+\eta^2})d\eta \quad (23)$$

where, in turn, in analogy with equation (12),

$$\Gamma'(\eta)=\frac{2}{b}\int_{-b/2}^{(b/2)-\eta}\gamma'(y)\gamma'(y+\eta)dy$$

Hence, the second and third approaches indicated in the section concerned with the mean-square lift (see eqs. (15) and (16)) can be used to obtain

$$\varphi_{w_e'}(\omega)=\frac{1}{b}\int_0^b\Gamma'(\eta)\tilde{\varphi}_w(\omega,\eta)d\eta \quad (24)$$

and

$$\varphi_{w_e'}(\omega)=\frac{1}{U}\int_0^\infty\Phi_w\left(\sqrt{\left(\frac{\omega}{U}\right)^2+\lambda^2}\right)|\tilde{\Gamma}'(\lambda)|^2d\lambda$$

where

$$\tilde{\Gamma}'(\lambda)=\frac{1}{b}\int_{-b/2}^{b/2}\gamma'(y)e^{-i\lambda y}dy$$

and

$$\varphi_{L'}(\omega)=\left(\frac{C_{l_p}qSb}{2U}\right)^2|\phi(k)|^2\varphi_{w_e'}(\omega) \quad (25)$$

so that the mean-square rolling moment can be obtained by integrating this spectrum.

A qualitative indication of the effect of span on the mean-square rolling moment sensed by an airplane may be obtained from the quantity $\psi_{w_e'}(0)$, which represents the integral of the spectrum $\varphi_{w_e'}$. For a linear loading, $\gamma'=6\frac{y}{b/2}$ and

$$\Gamma'(\eta)=6\left[4-6\frac{\eta}{b/2}+\left(\frac{\eta}{b/2}\right)^3\right]$$

$$\tilde{\Gamma}'(\lambda)=6i\frac{\frac{\lambda b}{2}\cos\frac{\lambda b}{2}-\sin\frac{\lambda b}{2}}{\left(\frac{\lambda b}{2}\right)^2}$$

Hence, using the aforementioned expression for the point correlation function yields

$$\varphi_{w_e'}(\omega)=\frac{L^*\overline{w^2}}{\pi U}\frac{18}{\beta'^4(1+k'^2)^4}\{[-32+2\beta'^2+(16\beta'^2+\beta'^4)K_0(\beta')+(32\beta'+6\beta'^3)K_1(\beta')]+k'^2[32-6\beta'^2-16\beta'^2K_0(\beta')-(32\beta'+2\beta'^3)K_1(\beta')+\beta'^3Ki_0(\beta')]\}$$

where

$$\beta'\equiv\beta\sqrt{1+k'^2}$$

and

$$\psi_{w_g'}(0)=\frac{12\overline{w^2}}{\beta^4}\left[\frac{\beta^3}{4}-6+e^{-\beta}\left(6+6\beta+3\beta^2+\frac{3}{4}\beta^3\right)\right]$$

This spectrum and its integral approach zero linearly as β tends to zero.

GENERALIZED AERODYNAMIC INFLUENCE FUNCTIONS IN UNSTEADY FLOW

The aerodynamic influence functions used in the preceding sections define the contribution of a given station of a wing to the total lift and rolling moment. In the analysis of a flexible wing, and even in the calculation of certain properties of a rigid wing, generalized aerodynamic influence functions are required, which define the contribution of one station on the wing to the lift at another station and thus represent a Green's function for the unsteady spanwise lift distribution. No work appears to have been done on such functions. For steady flow, apart from some calculations for supersonic speeds which are based on the subdivision of a given wing into a number of squares, the only available results appear to be those given in references 9 and 10.

The analysis in this section is based on reference 8 and consists in a generalization of the method presented therein to unsteady flow. This method constitutes an attempt to predict the lift distribution for any given twist on the basis of knowledge concerning a few definite angle-of-attack distributions, and may therefore be termed a function-interpolation method. For the present purpose, the presumably known lift distributions are the ones for uniform angle of attack in direct and reverse flow in a dimensionless form, namely, $cc_l/\bar{c}C_L$; they will be referred to as $\gamma_D(y)$ and $\gamma_R(y)$, respectively. (The function $\gamma(y)$ used previously is the one now designated by $\gamma_R(y)$.) Also required is the coefficient of damping in roll C_{l_p}. (The lift-curve slope and the coefficient of damping in roll are the same in direct and reverse flow by virtue of the reciprocity theorem, so that no distinction will be made.)

The approach of reference 9 then yields the following approximate expression for the lift distribution due to any angle-of-attack distribution:

$$\frac{cc_l}{\bar{c}}=C_{L_\alpha}\{\bar{\alpha}\,\gamma_D(y)+K[\alpha(y)-\bar{\alpha}]\,\gamma_R(y)\} \tag{26}$$

where

$$\bar{\alpha}=\frac{1}{b}\int_{-b/2}^{b/2}\gamma_R(y)\,\alpha(y)\,dy$$

$$K=\frac{C_{l_p}}{C_{L_\alpha}}\frac{b^3}{4\int_0^{b/2}\gamma_R(y)\,y^2dy} \tag{27}$$

Values of K may be obtained from the information given in references 9 and 10. As the aspect ratio tends to zero, K approaches ½, whereas for aspect ratios approaching infinity, K tends to 1. The following relations can be obtained from elementary definitions and from the aforementioned reciprocity theorem:

$$C_L=\frac{1}{b}\int_{-b/2}^{b/2}\frac{cc_l}{\bar{c}}\,dy$$

$$=\frac{C_{L_\alpha}}{b}\int_{-b/2}^{b/2}\gamma_R(y)\,\alpha(y)\,dy$$

$$\frac{1}{b}\int_{-b/2}^{b/2}\gamma_D(y)\,dy=\frac{1}{b}\int_{-b/2}^{b/2}\gamma_R(y)\,dy=1$$

$$C_l=\frac{1}{b^2}\int_{-b/2}^{b/2}\frac{cc_l}{\bar{c}}\,y\,dy$$

$$C_{l_p}=\frac{1}{b^2}\int_{-b/2}^{b/2}\left(\frac{cc_l}{\bar{c}}\right)_{\alpha=\frac{y}{b/2}}y\,dy$$

With the aid of these relations the lift distributions given by equation (26) may readily be seen to have the correct lift and rolling moment for all angle-of-attack distributions, and to reduce to the exact lift distributions for angle-of-attack distributions which vary linearly along the span. A lift distribution which possesses these properties could readily be obtained by approximating any given angle-of-attack distribution by a suitably chosen linear one. However, this procedure would yield poorer approximations than the ones furnished by equation (26); for a parabolic angle-of-attack distribution on a wing of very small aspect ratio, for instance, this procedure would yield the lift distribution

$$\frac{cc_l}{\bar{c}}=\frac{A}{2}\sqrt{1-\left(\frac{y}{b/2}\right)^2}$$

with a bending moment too low by 17 percent compared with the one of the exact lift distribution,

$$\frac{cc_l}{\bar{c}}=\frac{A}{3}\sqrt{1-\left(\frac{y}{b/2}\right)^2}\left[1+2\left(\frac{y}{b/2}\right)^2\right]$$

whereas equation (26) yields

$$\frac{cc_l}{\bar{c}}=\frac{A}{4}\sqrt{1-\left(\frac{y}{b/2}\right)^2}\left[1+4\left(\frac{y}{b/2}\right)^2\right]$$

with a bending moment 8 percent too high. For very large aspect ratios, γ_D and γ_R both tend to the chord distribution $c/\bar{c}$, so that the lift distributions given by equation (26) tend to the correct limiting value,

$$\left(\frac{cc_l}{\bar{c}}\right)_{A\to\infty}=C_{l_\alpha}\frac{c}{\bar{c}}\alpha \tag{28}$$

Therefore the accuracy of the results furnished by equation (26) may be expected to increase as the aspect ratio increases, whereas the accuracy of the other approximation is independent of aspect ratio.

In this connection, it may be mentioned that "strip theory" consists in using equation (28) for all aspect ratios and, hence, is not very satisfactory for wings with medium and low aspect ratios. For instance, for the case discussed in the preceding paragraph, it furnishes a bending moment which is too low by 25 percent for a delta wing, and too high by 25 to 100

percent for tapered wings. (The two figures pertain to taper ratios of ¼ and 1, respectively.)

Substituting the value for $\bar{\alpha}$ from equation (27) into equation (26) gives the following expression for $cc_l/\bar{c}$:

$$\frac{cc_l}{\bar{c}}=\frac{C_{L_\alpha}}{b}\int_{-b/2}^{b/2}\{[\gamma_D(y)-K\gamma_R(y)+bK\,\delta(y-\eta)]\,\gamma_R(\eta)\}\alpha(\eta)\,d\eta$$

The expression in braces in the integrand is the desired generalized aerodynamic influence function and will be designated by $G(y,\eta)$, so that

$$G(y,\eta)=[\gamma_D(y)-K\gamma_R(y)+bK\,\delta(y-\eta)]\,\gamma_R(\eta) \tag{29}$$

and

$$\frac{cc_l}{\bar{c}}=\frac{C_{L_\alpha}}{b}\int_{-b/2}^{b/2}G(y,\eta)\,\alpha(\eta)\,d\eta \tag{30}$$

In the limiting cases of wings of very low or very high aspect ratio, γ_D and γ_R approach a common value, say γ. Thus, for wings of very low aspect ratio,

$$G(y,\eta)=\frac{1}{2}[\gamma(y)+b\,\delta(y-\eta)]\,\gamma(\eta) \tag{31a}$$

where δ is the Dirac delta (unit-impulse) function, and for wings of very high aspect ratio,

$$G(y,\eta)=b\,\delta(y-\eta)\,\gamma(\eta) \tag{31b}$$

which is the Green's function associated with strip theory. Thus, on wings of very high aspect ratio all the lift produced by the local angle of attack at a given station is carried in the immediate vicinity of that station, whereas on wings of very low aspect ratio much of the lift is carried elsewhere. This tendency for a given station to affect a greater portion of the wing as the span decreases is, of course, to be expected.

The preceding analysis can be applied to the oscillatory case at a given reduced frequency k, as well as to the steady case. If the assumption of invariance of normalized distributions with time or frequency is made, as before, then $\gamma_D(y)$, $\gamma_R(y)$, and K are independent of frequency, so that equation (30) can be written as

$$l(y;k)=\frac{C_{L_\alpha}(k)qS}{b^2}\int_{-b/2}^{b/2}G(y,\eta)\alpha(\eta)d\eta \tag{32a}$$

where $G(y,\eta)$, defined as before, is independent of k. By applying a Fourier transformation to both sides of this equation the following relation is then obtained for flight through continuously varying turbulence (cf. eq. (4)), as modified by the assumption stated in equation (5):

$$l(y,t)=\frac{1}{b}\int_{-\infty}^{\infty}h_L(t_1)dt_1\frac{1}{b}\int_{-b/2}^{b/2}G(y,\eta)w(U(t-t_1),\eta)d\eta \tag{32b}$$

where $l(y,t)$ is the lift per unit span at station y and time t, and where the function $h_L(t)$ is the one used previously.

The correlation function for this lift can then be written as

$$\begin{aligned}\psi_{l(y)}(\tau)&=\frac{1}{b^2}\int_{-\infty}^{\infty}\int_{-\infty}^{\infty}h_L(t_1)h_L(t_2)\,dt_1dt_2\,\frac{1}{b^2}\int_{-b/2}^{b/2}\int_{-b/2}^{b/2}G(y,\eta_1)\,G(y,\eta_2)\psi_w\left(\sqrt{U^2(\tau+t_1-t_2)^2+(\eta_2-\eta_1)^2}\right)d\eta_1d\eta_2\\&=\frac{1}{b^2}\int_{-\infty}^{\infty}\int_{-\infty}^{\infty}h_L(t_1)h_L(t_2)dt_1dt_2\psi_{w_e}(U(\tau+t_1-t_2),y)\end{aligned} \tag{33a}$$

where the function

$$\psi_{w_e}(U\tau,y)\equiv\frac{1}{b^2}\int_{-\infty}^{\infty}\int_{-\infty}^{\infty}G(y,\eta_1)\,G(y,\eta_2)\psi_w(\sqrt{U^2\tau^2+(\eta_2-\eta_1)^2})\,d\eta_1d\eta_2$$

represents an effective correlation function, which when transformed into the equivalent power spectrum $\varphi_{w_e}(\omega,y)$ can be used to obtain the power spectrum for $l(y,t)$ and hence its mean-square value. Thus

$$\varphi_{l(y)}(\omega)=\frac{1}{b^2}\left(\frac{C_{L_\alpha}qS}{U}\right)^2|\phi(k)|^2\varphi_{w_e}(\omega,y) \tag{33b}$$

Before the calculation of $\varphi_{w_e}(\omega,y)$ is discussed, the function $\psi_{w_e}(U\tau,y)$ will be defined in a somewhat more general form than in the preceding paragraph in order to anticipate future needs, namely

$$\psi_{w_e}(U\tau,y_1,y_2)\equiv\frac{1}{b^2}\int_{-b/2}^{b/2}\int_{-b/2}^{b/2}G(y_1,\eta_1)\;G(y_2,\eta_2)\;\psi_w(\sqrt{U^2\tau^2+(\eta_2-\eta_1)^2})d\eta_1\,d\eta_2$$

If the assumption is now made that $\gamma_R(y)$ and $\gamma_D(y)$ are the same, as is the case for all unswept wings and for wings of very low or very high aspect ratio, they can both be identified with the function $\gamma(y)$ used previously, so that

$$G(y,\eta)=[(1-K)\,\gamma(y)+bK\,\delta(y-\eta)]\,\gamma(\eta) \tag{34}$$

and

$$\psi_{w_e}(U\tau,y_1,y_2)=\{(1-K)^2\psi_{w_e}(U\tau)+K(1-K)[\psi_{w_e^*}(U\tau,y_1)+\psi_{w_e^*}(U\tau,y_2)]+K^2\psi_w(\sqrt{U^2\tau^2+(y_2-y_1)^2})\}\,\gamma(y_1)\;\gamma(y_2)$$

where $\psi_{w_e}(U\tau)$ is the correlation function calculated previously for the averaged vertical component of turbulence, and where

$$\psi_{w_e^*}(U\tau,y)=\frac{1}{b}\int_{-b/2}^{b/2}\gamma(\eta)\;\psi_w(\sqrt{U^2\tau^2+(y-\eta)^2})\;d\eta$$

Similarly, then,

$$\varphi_{w_\epsilon}(\omega,y_1,y_2)=\{(1-K)^2\varphi_{w_\epsilon}(\omega)+K(1-K)[\varphi_{w_\epsilon^*}(\omega,y_1)+\varphi_{w_\epsilon^*}(\omega,y_2)]+K^2\tilde{\varphi}_w(\omega,y_2-y_1)\}\gamma(y_1)\gamma(y_2) \quad (35)$$

where $\varphi_{w_\epsilon^*}(\omega,y)$ is the Fourier transform of $\psi_{w_\epsilon^*}(U\tau,y)$, so that

$$\varphi_{w_\epsilon^*}(\omega,y)=\frac{1}{b}\int_{-b/2}^{b/2}\gamma(\eta)\tilde{\varphi}_w(\omega,|y-\eta|)d\eta \quad (36)$$

and thus represents an averaged form of the spectrum $\tilde{\varphi}_w$ introduced previously. (See eqs. (16) and (19).) For uniform spanwise loading and the point correlation function used previously, this function is

$$\varphi_{w_\epsilon^*}(\omega,y)=\frac{L^*\overline{w^2}}{\pi U}\frac{1}{\beta}\frac{1}{(1+k'^2)^{5/2}}\{3k'^2[Ki_0(a_1)+Ki_0(a_2)-a_1K_0(a_1)-a_2K_0(a_2)]+[a_1^2K_1(a_1)+a_2^2K_1(a_2)]\}$$

where

$$a_1,a_2\equiv\frac{\frac{b}{2}\pm y}{L^*}\sqrt{1+k'^2}$$

and is shown in figure 4 for several values of $\frac{|y|}{b/2}$.

The more restricted form of φ_{w_ϵ} required in equation (33b) can now be obtained from the more general form given in

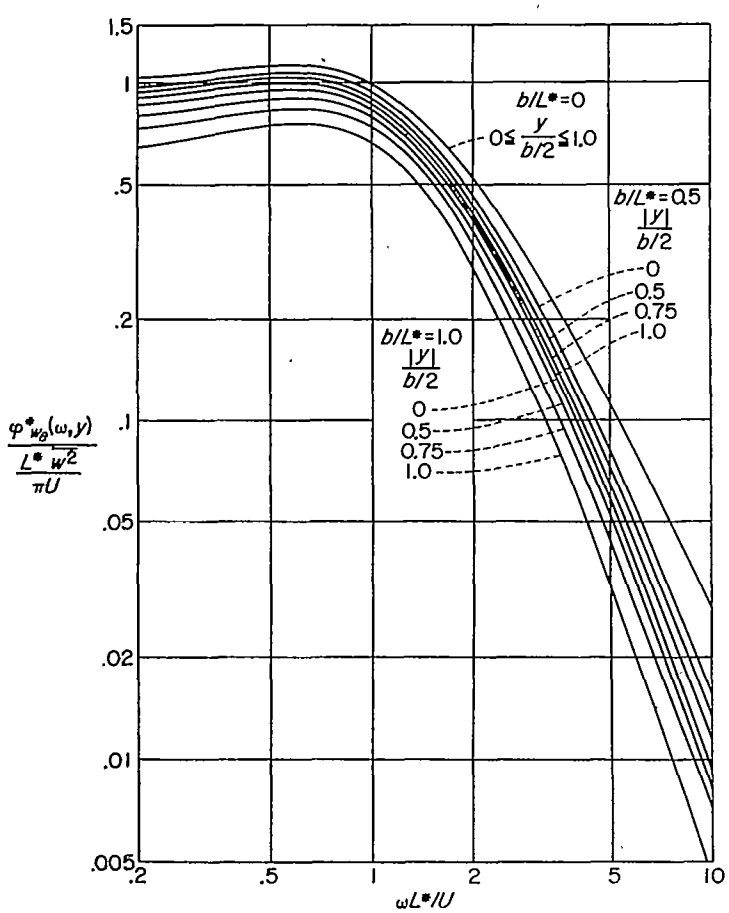

FIGURE 4.—The power spectrum $\varphi_{w_\epsilon^*}(\omega, y)$.

equation (35) by setting $y_2=y_1=y$ in the latter, to yield

$$\varphi_{w_\epsilon}(\omega)=[(1-K)^2\varphi_{w_\epsilon}(\omega)+2K(1-K)\varphi_{w_\epsilon^*}(\omega,y)+K^2\varphi_w(\omega)]\gamma^2(y) \quad (37)$$

MEAN-SQUARE BENDING AND PITCHING MOMENTS

When the variation of the gust intensity along the span is taken into account, the mean-square lift $\overline{L^2}$ is not an adequate index of the stresses in the wing, nor can the stresses be obtained from the mean-square lift distribution $\overline{l^2(y)}$. Instead, the mean-square bending and twisting moments, as well as the mean-square vertical shear, must be calculated directly.

In a manner analogous to that employed for the lift and rolling moment, each of these quantities can be expressed in terms of a certain influence function which, by means of the reciprocity theorem, can be related to a lift distribution on the wing in reverse flow. For instance, for the root bending moment the desired lift distribution is the one for an angle of attack which is zero on one wing and proportional to y on the other, as may be seen from the fact that the bending moment can be expressed as

$$M_B=\int_{-b/2}^{b/2}[l(y)]_{\alpha(y)}f(y)dy$$

where

$$f(y)\equiv 0 \qquad (y<0)$$

$$f(y)\equiv y \qquad (y\geqq 0)$$

so that, according to the reciprocity theory for unswept wings in steady or indicial flow,

$$M_B=\int_{-b/2}^{b/2}[l(y)]_{f(y)}\alpha(y)dy$$

Similarly, for the root shear the required lift distribution corresponds to an angle of attack which is zero on one wing and uniform on the other.

Such lift distributions can be calculated readily. For instance, for subsonic flow and unswept wings they can be obtained from those given in reference 10; the lift distribution for the root bending moment is one-half the sum of a linear symmetric and linear antisymmetric lift distribution, and the lift distribution for the root shear is one-half the sum of a lift distribution due to a uniform angle of attack and a lift distribution due to deflection of a full-span aileron.

However, in some cases such calculations may be time-consuming, and an alternative approach may be desirable. One such approach consists in synthesizing the desired influence function from the generalized lift-influence (Green's) function discussed in the preceding section. In order to illustrate the use of this approach, it is adopted in this section.

The bending moment at any station $y\left(0\leqq y\leqq\frac{b}{2}\right)$ and at

any time t can be obtained from the lift distribution considered in the preceding section as

$$\begin{aligned}M_B(y,t)&=\int_y^{b/2}(y'-y)l(y',t)\,dy'\\&=\frac{1}{b}\int_y^{b/2}(y'-y)\,dy'\int_{-\infty}^{\infty}h_L(t_1)\,dt_1\frac{1}{b}\int_{-b/2}^{b/2}G(y',\eta)w(U(t-t_1),\eta)\,d\eta\\&=\frac{1}{b}\int_{-\infty}^{\infty}h_L(t_1)\,dt_1\int_{-b/2}^{b/2}\tilde{M}(y,\eta)w(U(t-t_1),\eta)d\eta\end{aligned}\tag{38}$$

where the influence function for the bending moment is

$$\tilde{M}(y,\eta)=\frac{1}{b}\int_y^{b/2}(y'-y)\,G(y',\eta)\,dy'\tag{39a}$$

so that, upon introducing the previously used function for $G(y,\eta)$

$$\tilde{M}(y,\eta)=[(1-K)M_1(y)+KM_2(y,\eta)]\gamma(\eta)\tag{39b}$$

where

$$M_1(y)=\frac{1}{b}\int_y^{b/2}(y'-y)\gamma(y')\,dy'$$

$$M_2(y,\eta)=\eta-y\quad(\eta>y)$$

$$M_2(y,\eta)=0\quad(\eta\leqq y)$$

and, hence, for the root bending moment,

$$M_1(0)=\frac{1}{b}\int_0^{b/2}y'\gamma(y')\,dy'$$

$$M_2(0,\eta)=\eta\quad(\eta>0)$$

$$M_2(0,\eta)=0\quad(\eta\leqq 0)$$

Hence, the correlation function for the root bending moment is

$$\begin{aligned}\psi_{M_B}(\tau)=\int_{-\infty}^{\infty}\int_{-\infty}^{\infty}h_L(t_1)h_L(t_2)dt_1dt_2\frac{1}{b^2}\int_{-b/2}^{b/2}\int_{-b/2}^{b/2}\{(1-K)^2M_1^2(y)+K(1-K)M_1(0)[M_2(0,\eta_1)+\\M_2(0,\eta_2)]+K^2M_2(0,\eta_1)M_2(0,\eta_2)\}\gamma(\eta_1)\gamma(\eta_2)\psi_w(\sqrt{U^2(\tau+t_1-t_2)^2+(\eta_2-\eta_1)^2})d\eta_1d\eta_2\end{aligned}\tag{40}$$

The approach used in the preceding sections can now be used to obtain the power spectrum of the root bending moment by evaluating the inner pair of integrals of equation (40), taking the Fourier transform of the result with respect to τ, and multiplying the power spectrum obtained in this manner by $\left(\frac{C_{L_\alpha}qS}{U}\right)^2|\phi(k)|^2$ or by using one of the alternative approaches indicated for the lift.

The spectrum corresponding to the inner pair of integrals is, for $K=1$ and uniform loading,

$$\begin{aligned}\varphi_{w_e''}(\omega)=\frac{L^*\overline{w^2}}{\pi U\beta^4(1+k'^2)^4}\Bigg\{\Bigg[(-64+2\beta'^2)+8\beta'^2K_0\left(\frac{\beta'}{2}\right)+\\(32\beta'+\beta'^3)K_1\left(\frac{\beta'}{2}\right)\Bigg]+k'^2\Bigg[\beta'^3Ki_0\left(\frac{\beta'}{2}\right)+(64-6\beta'^2)-\\8\beta'^2K_0\left(\frac{\beta'}{2}\right)-(32\beta'-\beta'^3)K_i\left(\frac{\beta'}{2}\right)\Bigg]\Bigg\}\end{aligned}$$

where $\beta'\equiv\beta\sqrt{1+k'^2}$, as before.

The integral of this spectrum is

$$\psi_{w_e''}(0)=\frac{\overline{w^2}}{3\beta^4}\left[\left(-24+\frac{\beta^3}{2}\right)+e^{-\beta/2}(24+12\beta+3\beta^2)\right]$$

Examination of $\psi_{w_e''}(0)$ indicates that, although the mean-square bending moment tends to decrease as the span increases, it decreases less rapidly than the mean-square lift, with the result that the effective lateral center of pressure moves outboard. Quantitatively, the distance from the plane of symmetry to the effective lateral center of pressure can be defined as the square root of the ratio of the mean-square root bending moment to the mean square of the lift on one wing, that is, of the root shear. Although these mean squares have not been calculated, the square root of the ratio of $\psi_{w_e''}(0)$ to the corresponding value for the root shear increases by 15.5 percent as β increases from 0 to infinity, with much of the increase realized at fairly small values of β.

For a swept wing the variation of the gust intensity along the span results in a pitching moment which must be taken

into account in calculations of the dynamic response of the airplane to continuous turbulence. This pitching moment can be obtained in substantially the same manner as the bending moment. Thus, if $\bar{y}$ is the station of the mean aerodynamic chord,

$$M(t)=\tan\Lambda\int_{-b/2}^{b/2}(\bar{y}-|y|)\,l\,(y,t)\,dy$$
$$=\tan\Lambda\,\frac{1}{b}\int_{-\infty}^{\infty}h_L(t_1)\,dt_1\int_{-b/2}^{b/2}M_3(\eta)w(U(t-t_1),\eta)\,d\eta \qquad (41)$$

where

$$M_3(\eta)=\frac{1}{b}\int_{-b/2}^{b/2}(\bar{y}-|y|)\,G(y,\eta)\,dy$$

so that, with the previously used approximation to the Green's function,

$$M_3(\eta)=\{(1-K)[\bar{y}-2M_1(0)]+K(\bar{y}-|\eta|)\}\gamma(\eta)$$

The correlation function, spectrum, and mean-square value of the pitching moment can then be obtained in the manner used in the preceding sections.

WING-TAIL CORRELATION EFFECTS

The tail strikes a given gust some time after the wing does; as a result, a pitching moment arises which does not exist in steady or quasi-steady motion, nor if the airplane is very small, because then the time lag is insignificant. This pitching moment can, for the purpose of the present paper, be analyzed either in terms of the correlation between the gusts at the wing and those at the tail or, if a time-lag term is included in the indicial-response function of the tail, in terms of the correlation between the wing and tail response functions. The first point of view serves to exhibit the effect under consideration more clearly and is adopted first; the second is more convenient and is adopted in the subsequent parts of this report.

In the somewhat artificial case of a small wing and tail separated by a relatively large distance, only the distribution of turbulence along a line (the flight path) rather than in a portion of a plane is needed. The pitching moment due to the vertical component of atmospheric turbulence can then be written as

$$M(t)=\int_{-\infty}^{\infty}h_w(t_1)w(U(t-t_1))dt_1+\int_{-\infty}^{\infty}h_t(t_1)w(x_t+U(t-t_1))dt_1$$

where x_t is the tail length, and where $h_w(t)$ and $h_t(t)$ are the pitching-moment responses to indicial gusts hitting the wing and tail, respectively, at $t=0$; both may include unsteady-lift effects, and, if downwash effects are to be considered, $h_w(t)$ should include the contribution to the pitching moment of the tail lift caused by the downwash at the tail associated with the lift on the wing which results from the indicial gust.

The spectrum of this moment can then be written as

$$\varphi_M(\omega)=\left[|H_w(\omega)+H_t(\omega)|^2-2\mathrm{R}\left\{\left(1-e^{i\frac{\omega}{U}x_t}\right)H_w^*(\omega)H_t(\omega)\right\}\right]\varphi_w(\omega)$$

where the symbols R{ } and * designate, respectively, the real part and the complex conjugate of a complex number. Obviously, when x_t approaches 0 the second term in the bracket in this equation vanishes, so that the first term represents the perfect-correlation effect, and the second represents the correction for imperfect correlation.

In order to furnish an estimate of the magnitude of the effects under consideration, some calculations have been made on the basis of the assumption that a real coefficient μ exists such that

$$H_w(\omega)=\mu H_t(\omega)$$

which implies that the attenuation with frequency of the contributions of the wing lift and tail lift, respectively, to the pitching moment is the same. The ratio μ is -1 for neutral stability, and $\mu>-1$ for stable flight; it is positive when the aerodynamic-center location (tail off) is behind the center of gravity, so that positive values of μ are not likely to be incurred with normal configurations and flight conditions.

For this case,

$$\varphi_M(\omega)=|H_t(\omega)|^2\left[(1+\mu)^2-2\mu\left(1-\cos\frac{\omega x_t}{U}\right)\right]\varphi_w(\omega)$$

and

$$\frac{\overline{M^2}}{(\overline{M^2})_{(tail\ alone)}}=(1+\mu)^2-2\mu\Psi\left(\frac{x_t}{L^*},\frac{x_t}{\bar{c}/2}\right)$$

where

$$\Psi\left(\frac{x_t}{L^*},\frac{x_t}{\bar{c}/2}\right)=\frac{\int_0^{\infty}|H_t(\omega)|^2\varphi_w(\omega)\left(1-\cos\frac{\omega x_t}{U}\right)d\omega}{\int_0^{\infty}|H_t(\omega)|^2\varphi_w(\omega)d\omega}$$

The function Ψ has been calculated for several values of its arguments by means of the lift-attenuation function given in equation (7) and the point spectrum used in the preceding sections, and is shown in figure 5. Also shown is the ratio of the mean-square moments as a function of the factor μ which in figure 5 is referred to as M_w/M_t. The effect of imperfect correlation is seen to be very large as the condition of neutral stability is approached; the entire pitching moment is then the result of instantaneous differences in gust intensities at the wing and tail.

In general, however, the tail length and the span are of the same order of magnitude, so that an analysis of the effect of imperfect correlation between the wing and tail must take into account the averaging effect of the wing span. The pitching moment at any instant is then

$$M(t)=\frac{1}{b}\int_{-\infty}^{\infty}h_w(t_1)dt_1\int_{-b/2}^{b/2}\gamma(y)\,w(U(t-t_1),y)dy+$$
$$\int_{-\infty}^{\infty}h_t(t_1)w(x_t+U(t-t_1),0)\,dt_1 \qquad (42a)$$

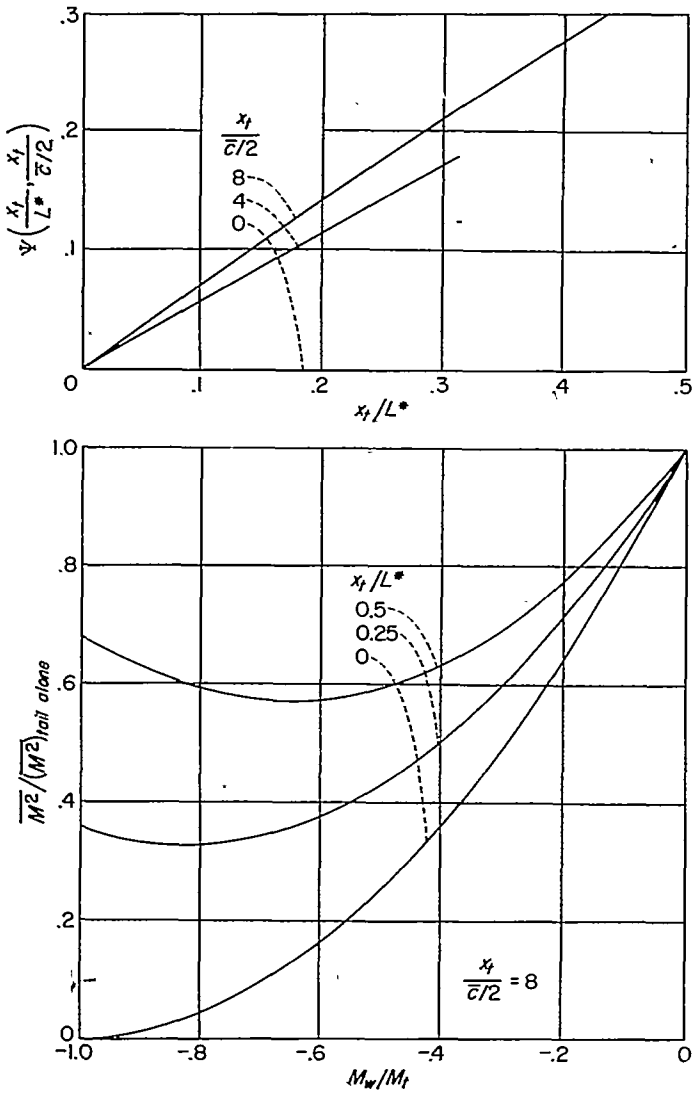

FIGURE 5.—Effect of tail length x_t on the mean-square pitching moment.

Hence, the power spectrum of this moment is

$$\varphi_{Mt}(\omega)=|H_w(\omega)|^2\varphi_{w_e}(\omega)+|H_t(\omega)|^2\varphi_w(\omega)+ 2\mathrm{R}\left\{e^{i\frac{\omega}{U}x_t}H_t(\omega)H_w^*(\omega)\right\}\varphi_{w_e^*}(\omega,0) \tag{42b}$$

where $\varphi_{w_e}(\omega)$ is the averaged spectrum of equations (11) and (13), and $\varphi_{w_e^*}(\omega,0)$ is the spectrum of equation (36) for $y=0$. (It should be noted that $h_t(t)$ is the response to an indicial response which strikes the tail at $t=0$; if it were the indicial response to a gust which strikes the wing at $t=0$, the factor $e^{i\frac{\omega}{U}x_t}$ in the preceding equation would not be required.)

DYNAMICS OF THE RIGID AIRPLANE

In this part of the report the motions of a rigid airplane subjected to atmospheric disturbances are considered. This part thus applies directly to those airplanes which fly at relatively low speeds and do not experience any significant structural deformations, and also serves as a preliminary to the treatment of the flexible airplane in the later parts.

The assumption is made that the motions are small enough to permit the use of linear approximations to the resulting aerodynamic forces and to permit the linear superposition of these forces. The longitudinal degrees of freedom (pitching, vertical, and horizontal motion) and the lateral degrees of freedom (yaw, sideslip, and roll) can therefore be considered separately. The first two sections of this part are concerned with the longitudinal motions of a small airplane. The material presented here is thus a generalization of the single-degree-of-freedom analysis presented in reference 2. Mathematically, the dynamic system is now described by a set of simultaneous ordinary differential equations rather than a single one, but the problem of calculating the pertinent transfer functions is still one of simple algebra. The extension of these results to the large airplane is effected in the third section, using the techniques developed in the first part of this report. The lateral motions of a large airplane are considered briefly in the fourth section, and the combination of the stresses due to longitudinal and lateral motion of a large airplane is discussed in the fifth section.

EQUATIONS OF LONGITUDINAL MOTION

The equations of motion of an airplane can be expressed in several coordinate systems. The system which is generally the most convenient one for analyses of airplane stability and is generally referred to as stability axes, consists of body-centered axes which are normal and parallel to the relative air velocity and rotate with the airplane as it pitches or yaws. (See ref. 11, for instance.) The aerodynamic forces related to this axis system can be measured more readily in wind tunnels than those related to other axis systems. In view of the very close relation of a stability analysis to the problem considered here, these axes will be used in this part of the paper, but in the analysis of the flexible airplane in the subsequent parts of the report space-centered axes will be used, because they are slightly more convenient for that purpose.

The airplane will be considered to be in steady level flight prior to disturbance. The motions studied will be the deviations from their mean values; for instance, the angle θ considered here will be the difference between the disturbed and the initial value of the angle of pitch. Hence, the motions and forces calculated by the method indicated here must be added to their mean values to obtain the total motions and forces.

Inasmuch as, for the purpose of a statistical analysis, the dynamic characteristics of the airplane are represented most conveniently by its transfer functions, attention will be confined in this section to sinusoidal gusts and motions.

For this case the linearized equations of longitudinal motion can be written as follows (see eqs. II–193 of ref. 11, for instance):

$$\begin{bmatrix} i\omega-Z_w & -Z_u & -i\omega U \\ -X_w & i\omega-X_u & g \\ -i\omega M_{\dot{w}}-M_w & -M_u & -\omega^2-i\omega M_q \end{bmatrix}\begin{Bmatrix} w_p \\ u_p \\ \theta \end{Bmatrix} =\phi(k)\begin{bmatrix} Z_w & Z_u \\ X_w & X_u \\ M_w & M_u \end{bmatrix}\begin{Bmatrix} w \\ u \end{Bmatrix} \tag{43}$$

The stability derivatives which appear in these equations are defined in table 1 in terms of conventional aerodynamic coefficients, and the numerical values are given for the example used in reference 11. (The value of the mean chord is not given in ref. 11 but it is assumed herein to be 10 feet on the basis of other information given in ref. 11.)

In analyses of the stability of a rigid airplane the quasi-steady approximation to unsteady-lift effects is usually made, in which, in effect, the forces corresponding to a steady attitude, to constant disturbance velocities, and to constant accelerations are considered. This approximation is justified because the motions of concern are generally sufficiently slow. For the same reason this approximation can also be made in analyzing the response of an airplane to atmospheric turbulence.

However, in this problem another type of unsteady-lift effect occurs, namely, that related to the forces directly attributable to the turbulence. This effect is here taken into account by multiplying the quasi-steady values of the forces due to gusts on the right side of equation (43) by the attenuation function $\phi(k)$. This procedure implies the assumption that the airplane is small relative to the scale of turbulence, inasmuch as no averaging effects have been taken into account; these effects will be discussed presently. Also, this attenuation function is strictly applicable only to the normal forces.

The unsteady effects on the drag are not known because of the relatively complicated nature of the mechanism which gives rise to drag. If, however, the assumption is made that upon entry into a sharp-edge gust the drag rises linearly and attains its steady-state value in the time required to travel N chord lengths, the drag equivalent of $|\phi(k)|^2$ is the function

$$\frac{1-\cos 2Nk}{2N^2k^2}$$

which, for N equal to about 5 or 6, agrees fairly well with $|\phi(k)|^2$ in the region of main interest ($k>1$).

The unsteady moment is also difficult to predict because of the paucity of knowledge concerning unsteady downwash effects for wings of finite span. However, inasmuch as the wing lift contributes part of the moment and, through the mechanism of downwash, determines to a large extent the moment contributed by the tail, the use of the lift attenuation function for the moment appears reasonable for a first approximation, and the use of the same function for the lift, drag, and moment facilitates the analysis.

For a more refined analysis, the time lag between the instants at which the gust hits the wing and the tail must be taken into account, not only for large airplanes, but even for small airplanes if phugoid motions are important. (See ref. 12.) Also, the lag in downwash should be taken into account for large airplanes and possibly also for small airplanes in some cases. One way of achieving this result is indicated in the next part of the present paper; another is discussed in reference 12.

In equation (43) the unknown quantities w_p and u_p are the normal and axial components of the disturbance velocities of the airplane relative to the free stream. Inasmuch as the coordinate axes rotate during the motion, the time derivatives of these quantities do not represent the actual airplane accelerations, which are required in analyses of the loads experienced by the airplane and the degree of passenger discomfort. If the deviations from a mean flight path are assumed to be small, the accelerations normal and parallel to the chord or longitudinal axis of the airplane are substantially the same as the absolute vertical and horizontal accelerations $\ddot{z}$ and $\ddot{x}$, which can be obtained from the relations

$$\ddot{z}=-\dot{w}_p+U\dot{\theta}$$

$$\ddot{x}=-\dot{u}_p-g\theta$$

The transfer functions for these quantities can then be obtained by introducing these relations into equation (43).

In studies of the longitudinal stability of airplanes, equation (43) is rarely solved in the form given here. It is usually reduced to two equations with two unknowns, either u_p and θ (the phugoid case) or w_p and θ (the short-period case), the short-period case being usually the one of primary interest. The part of the turbulent energy contained in the frequency range near the phugoid frequency is relatively small, so that the phugoid case has no significance for the analysis of loads and accelerations resulting from atmospheric turbulence. Hence, the short-period case, which ignores the phugoid oscillations, furnishes an excellent approximation to the loads and accelerations associated with the longitudinal motions of an airplane in turbulent air. However, another two-degree-of-freedom case, the one involving w_p and u_p, is useful in certain studies of the effects related to the interaction of horizontal and vertical components of turbulence.

TABLE 1.—DEFINITIONS AND NUMERICAL VALUES OF STABILITY DERIVATIVES

Derivative	Definition	Numerical value for the example
Z_w	$-\frac{qS}{mU}(C_{L_\alpha}+C_D)$	−1.430
Z_u	$-\frac{2qS}{mU}(C_{L_u}+C_L)$	−0.0955
X_w	$\frac{qS}{mU}(C_L-C_{D_\alpha})$	0.0016
X_u	$-\frac{2qS}{mU}(C_{D_u}+C_D)$	−0.0097
M_w	$\frac{qS\bar{c}}{I_{yy}U}C_{m_\alpha}$	−0.0235
$M_{\dot{w}}$	$\frac{qS\bar{c}^2}{2I_{yy}U^2}C_{m_{\dot{\alpha}}}$	−0.0013
M_u	$\frac{2qS\bar{c}}{I_{yy}U}(C_{m_u}+C_m)$	0
M_q	$\frac{qS\bar{c}^2}{2I_{yy}U}C_{m_q}$	−1.920

W, lb	30,500
U, fps	660
$\bar{c}$, ft	10
Altitude, ft	20,000

Both of these two-degree cases can be reduced to the single-degree-of-freedom case involving only z (or w_p). For airplanes which have a large moment of inertia in pitch this simple case furnishes a good approximation. It has been studied in reference 2, where substantially the same approximations to the unsteady-lift effects were made as are made here, except that in reference 2 apparent-mass effects were included. (These effects are not included in the stability derivatives used in equation (43) because they are usually small—less than 1 percent of the mass of the airplane—and are different for each degree of freedom. However, if desired, the apparent mass pertaining to a given degree of freedom can easily be added to the airplane mass in calculating the stability derivatives.) However, this approximation is more nearly valid for calculating peak loads pursuant to an entry into a sharp-edge gust than for calculating the response due to random turbulence. Consequently, in the following sections, attention will be confined to the short-period case, although the analysis is equally applicable to the other case and easily extended to the case of three degrees of freedom.

SOLUTION OF THE EQUATIONS OF LONGITUDINAL MOTION

Transfer functions.—If the degree of freedom pertaining to x (or u_p) is ignored, the solution of equation (43) can be written as

$$\begin{Bmatrix} \ddot{z} \\ \ddot{\theta} \end{Bmatrix} = \begin{bmatrix} H_{\ddot{z}}^{w}(\omega) & H_{\ddot{z}}^{u}(\omega) \\ H_{\ddot{\theta}}^{w}(\omega) & H_{\ddot{\theta}}^{u}(\omega) \end{bmatrix} \begin{Bmatrix} w \\ u \end{Bmatrix} \tag{44}$$

where the transfer function $H_{\ddot{z}}^{w}(\omega)$ is defined by

$$H_{\ddot{z}}^{w}(\omega) = \phi(k)\frac{-A_{\ddot{z}}^{w}\omega^2 + B_{\ddot{z}}^{w} i\omega + C_{\ddot{z}}^{w}}{-A_0\omega^2 + B_0 i\omega + C_0} \tag{45}$$

where, in turn, the coefficients are defined in terms of the stability derivatives (see table 1) by

$$A_0 = 1 \qquad A_{\ddot{z}}^{w} = -Z_w'$$

$$B_0 = -(Z_w + M_q + UM_{\dot{w}}) \qquad B_{\ddot{z}}^{w} = Z_w'(UM_{\dot{w}} + M_q)$$

$$C_0 = M_q Z_w - UM_w \qquad C_{\ddot{z}}^{w} = -U(M_w' Z_w - M_w Z_w')$$

The transfer function $H_{\ddot{\theta}}^{w}(\omega)$ can be defined similarly in terms of the coefficients

$$A_{\ddot{\theta}}^{w} = M_w' + Z_w' M_{\dot{w}}$$

$$B_{\ddot{\theta}}^{w} = -(M_w' Z_w - M_w Z_w')$$

$$C_{\ddot{\theta}}^{w} = 0$$

In these equations a distinction has been made between the values of Z_w and M_w which occur on the right side of equation (43) and are here designated by a prime mark, and those on the left side of that equation. The primed derivatives pertain to the lift and moment directly due to gusts, whereas the unprimed derivatives pertain to the lift and moment due to airplane motion; the reason for this distinction is discussed in a later section. Furthermore, the coefficients $A_{\ddot{z}}^{u}$, $B_{\ddot{z}}^{u}$, $C_{\ddot{z}}^{u}$, $A_{\ddot{\theta}}^{u}$, $B_{\ddot{\theta}}^{u}$, and $C_{\ddot{\theta}}^{u}$ are the same as the coefficients $A_{\ddot{z}}^{w}$, $B_{\ddot{z}}^{w}$, . . . except that Z_w, Z_w', M_w, and M_w' are replaced by Z_u, Z_u', M_u, and M_u'.

With these transfer functions the mean-square values of $\ddot{z}$ and $\ddot{\theta}$ can be calculated from the spectra of w and u by using equation (1), provided that the simultaneous action of w and u is taken into account. In order to analyze this effect the vertical acceleration $\ddot{z}$ will be considered, but the analysis will be applicable to $\ddot{\theta}$ or any other characteristic of the airplane which responds to w and u. Furthermore, the transfer functions need not be those considered in equation (44), but can be those calculated for the three-degree-of-freedom system or for a flexible airplane.

Normal-acceleration spectrum and mean-square value.—For the present purpose the indicial-response functions $h_{\ddot{z}}^{w}(t)$ and $h_{\ddot{z}}^{u}(t)$, which are the Fourier transforms of the transfer functions (see eq. (3a)), are more convenient. In terms of these indicial-response functions,

$$\ddot{z}(t) = \int_{-\infty}^{\infty} h_{\ddot{z}}^{w}(t_1) w(U(t-t_1))\, dt_1 + \int_{-\infty}^{\infty} h_{\ddot{z}}^{u}(t_1)\, u(U(t-t_1))\, dt_1$$

Then, if $w(t)$ and $u(t)$ are stationary in a statistical sense, the correlation function for $\ddot{z}(t)$ can be written as

$$\begin{aligned}\psi_{\ddot{z}}(\tau) = \int_{-\infty}^{\infty}\int_{-\infty}^{\infty} [&h_{\ddot{z}}^{w}(t_1)\, h_{\ddot{z}}^{w}(t_2)\, \psi_w(U(\tau+t_1-t_2)) + \\ &h_{\ddot{z}}^{u}(t_1)\, h_{\ddot{z}}^{u}(t_2)\, \psi_u(U(\tau+t_1-t_2)) + \\ &h_{\ddot{z}}^{w}(t_1)\, h_{\ddot{z}}^{u}(t_2)\, \psi_{wu}(U(\tau+t_1-t_2)) + \\ &h_{\ddot{z}}^{u}(t_1)\, h_{\ddot{z}}^{w}(t_2)\, \psi_{wu}(U(-\tau+t_1-t_2))]\, dt_1\, dt_2\end{aligned} \tag{46}$$

where $\psi_{wu}(U\tau)$ is a cross correlation of w and u defined by

$$\psi_{wu}(U\tau) = \overline{w(x+Ut)\, u(x+U(t+\tau))}$$

Now, if the turbulence is isotropic, the mutually perpendicular velocity components u and w at points in the XY-plane are statistically independent, and their cross correlation is zero. Therefore, the two terms in equation (46) involving $\psi_{wu}(U\tau)$ vanish, and the power spectrum of $\ddot{z}$ is

$$\varphi_{\ddot{z}}(\omega) = |H_{\ddot{z}}^{w}(\omega)|^2 \varphi_w(\omega) + |H_{\ddot{z}}^{u}(\omega)|^2 \varphi_u(\omega) \tag{47}$$

so that, generally speaking, the power spectrum of a response which depends on both the horizontal and the vertical component of turbulence is simply the sum of the power spectra of the two contributions, provided the turbulence is isotropic. (This statement can be shown to be true even if the distribution of the gusts over the span is taken into account.)

For the short-period two-degree-of-freedom case, then, the contribution due to w is

$$\overline{\ddot{z}^2} = \int_0^{\infty} |\phi(k)|^2 \frac{(A_{\ddot{z}}^{w})^2\omega^4 - [2A_{\ddot{z}}^{w}C_{\ddot{z}}^{w} - (B_{\ddot{z}}^{w})^2]\omega^2 + (C_{\ddot{z}}^{w})^2}{\omega^4 - (2C_0 - B_0^2)\omega^2 + C_0^2} \varphi_w(\omega)\, d\omega$$

and the contribution due to u can be obtained from the same expression, but with the subscript and superscript w replaced by u. However, the ratio of the two contributions is in the

order of $4\alpha^2$, where α is the trim angle of attack in radians, measured from the zero-lift conditions. Consequently, except at very high lift coefficients, such as those used in landing, the contribution due to u is usually negligible compared with the one due to w and is disregarded in subsequent sections.

By means of the lift-attenuation function given in equation (7) and the point spectrum used in the first part of the report, the integral for $\overline{\ddot{z}^2}$ has been evaluated (by using the technique of partial fractions for the integrand) for the example of reference 11. (The lift-attenuation function of equation (7) has been used despite its shortcomings in order to facilitate the analytic integration of the spectra.) The results are shown in figure 6, as are the results calculated similarly for the three-degree-of-freedom case, the other two-degree-of-freedom case (horizontal and vertical motion; referred to in the figure as the zero-pitch approximation), and the single-degree-of-freedom case (vertical motion). An examination of this figure indicates that, at least for this airplane, inclusion of horizontal motions does not affect the mean-square normal-acceleration response to any significant extent. These calculations pertain to a "small" airplane, and no distinction has been made between the primed and unprimed values of Z_w and M_w.

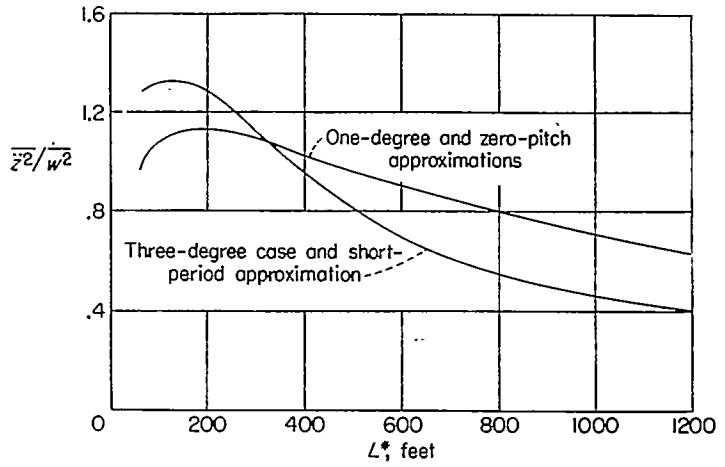

FIGURE 6.—Effect of scale of turbulence on the mean-square acceleration of the example airplane.

The preceding treatment of the short-period case has the advantage of using readily available information concerning the characteristics of any given airplane. For the purpose of trend studies a dimensionless form of the transfer functions is preferable. The preceding equation for $\overline{\ddot{z}^2}$ can be written in dimensionless form (the contribution of horizontal gusts again being neglected) as

$$\frac{\overline{\ddot{z}^2}}{g^2}=\left(\frac{U^2}{g\bar{c}/2}\right)^2\frac{\overline{w^2}}{U^2}\frac{4}{\kappa^2}\int_0^\infty|\phi(k)|^2\frac{k^4+4\left(\nu-\frac{1}{\kappa}\right)^2k^2}{k^4-2(k_o^2-\nu^2)k^2+(k_o^2+\nu^2)^2}\frac{U\varphi_w(\omega)}{L^*\overline{w^2}}dk' \tag{48a}$$

and, similarly,

$$\frac{\overline{\ddot{\theta}^2}}{(2g/\bar{c})^2}=\left(\frac{U^2}{g\bar{c}/2}\right)^2\frac{\overline{w^2}}{U^2}\left[\left(\nu-\frac{2}{\kappa}\right)^2+k_o^2\right]^2\int_0^\infty|\phi(k)|^2\frac{k^4}{k^4-2(k_o^2-\nu^2)k^2+(k_o^2+\nu^2)^2}\frac{U\varphi_w(\omega)}{L^*\overline{w^2}}dk' \tag{48b}$$

where κ is the mass parameter

$$\kappa\equiv\frac{8m}{C_{L_\alpha}\rho S\bar{c}}$$

ν is the dimensionless damping coefficient

$$\nu\equiv\frac{c}{2U}\frac{\log_e 2}{T_{1/2}}$$

$T_{1/2}$ is the time to damp to one-half amplitude, which is given by

$$\frac{\log_e 2}{T_{1/2}}=-\frac{1}{2}(Z_w+M_q+UM_{\dot{w}})$$

so that

$$\nu=\frac{1}{\kappa}\left(1-\frac{1}{2}\frac{m\bar{c}^2}{I_y}\frac{C_{m_q}+C_{m_{\dot{\alpha}}}}{C_{L_\alpha}}\right)$$

and k_o is the dimensionless frequency of the short-period oscillations,

$$k_o\equiv\frac{\omega_o\bar{c}}{2U}$$

with

$$\omega_o=\sqrt{M_qZ_w-UM_w-\frac{1}{4}\left(Z_w+M_q+UM_{\dot{w}}\right)^2}$$

so that

$$k_o=\frac{1}{\kappa}\sqrt{-\frac{m\bar{c}^2}{I_y}\left(\kappa\frac{C_{m_\alpha}}{C_{L_\alpha}}+2\frac{C_{m_q}}{C_{L_\alpha}}\right)-\left(1-\frac{1}{2}\frac{m\bar{c}^2}{I_y}\frac{C_{m_q}+C_{m_{\dot{\alpha}}}}{C_{L_\alpha}}\right)^2}$$

Thus, for this two-degree-of-freedom case the dimensionless mean-square responses are functions of only two additional parameters, which are dimensionless forms of the main characteristics of the short-period case (the short-period frequency and the time to damp to one-half amplitude), beyond those encountered in the single-degree-of-freedom case, namely, the mass parameter κ and the scale parameter $s\equiv\frac{L^*}{\bar{c}/2}$.

Bending-moment spectrum and mean-square value.—For a small airplane the instantaneous bending moments at various points on the span are proportional to the instantaneous normal acceleration. For instance, the root bending moment can be written as

$$M_B=\frac{L_w}{2}\bar{y}-\frac{m_w}{2}\bar{y}\ddot{z} \tag{49a}$$

where L_w and m_w are, respectively, the lift on and the mass of the wing, and where $\bar{y}$ and $\bar{\bar{y}}$ are the lateral distances to the center of pressure of the lift on one wing and the center of gravity of the mass of one wing. However, L_w is proportional to the lift L on the entire airplane, which in turn is proportional to the normal acceleration, so that

$$L_w=\frac{L_w}{L}m\ddot{z}$$

and

$$M_B=\left[\frac{m}{2}\left(\frac{L_w}{L}\bar{y}-\frac{m_w}{m}\bar{\bar{y}}\right)\right]\ddot{z} \tag{49b}$$

Hence, the spectrum and mean-square value of M_B are proportional to the spectrum and mean-square value of $\ddot{z}$, respectively, the constant of proportionality being the square of the quantity in the brackets of equation (49b).

SPECIAL PROBLEMS RELATED TO THE LONGITUDINAL MOTION OF LARGE AIRPLANES

Single-degree-of-freedom case.—In the preceding sections the airplane has been assumed to be small in the sense of this report, and neither the instantaneous lateral variation of the intensity of turbulence nor the difference between instantaneous intensities at the wing and the tail has been taken into account. In this section this restriction is removed by introducing the aerodynamic forces calculated in the first part of this report into the dynamic analysis of the preceding sections. The arguments advanced in the preceding section for ignoring horizontal gusts and horizontal motions are equally valid for the large airplane; therefore these gusts and motions will not be considered here.

For. the single-degree-of-freedom case involving only vertical motion the required modification for the normal acceleration is very simple. For this case the transfer function is

$$H_{\ddot{z}}^{w}(\omega)=-\phi(k)\frac{Z_w'}{i\omega-Z_w} \tag{50}$$

where Z_w', attenuated by $\phi(k)$, is the stability derivative for vertical gusts and, hence, represents the lift per unit gust intensity. Therefore, if the result for the lift calculated in the first part of this report is used, the mean-square normal acceleration becomes

$$\overline{\ddot{z}^2}=\int_0^\infty |\phi(k)|^2\frac{Z_w^2\omega^2}{\omega^2+Z_w^2}\varphi_{w_e}(\omega)\,d\omega$$

(The function $\varphi_{w_e}(\omega)$ is defined in the first part of this report.) This expression differs from the result obtained in reference 2 only in that $\varphi_w(\omega)$ is here replaced by $\varphi_{w_e}(\omega)$.

However, even for the single-degree case the calculation of the bending moment now becomes a considerably more complicated problem, because the lateral centers of pressure of the lifts due to the motion of the airplane and directly due to turbulence no longer coincide. Equation (49a) now becomes

$$M_B=-\frac{\bar{y}}{2}\frac{L_w}{L}\frac{C_{L_\alpha}qS}{U}\frac{\dot{z}}{U}-\frac{m_w}{2}\bar{\bar{y}}\ddot{z}+\frac{1}{b}\int_{-\infty}^{\infty}h_L(t_1)\,dt_1\int_{-b/2}^{b/2}\gamma_M(y)\,w(U(t-t_1),y)\,dy \tag{51}$$

where C_{L_α} is the lift-curve slope for the entire airplane, $h_L(t)$ is the response function used in equation (38), and $\gamma_M(y)$ is the function $\tilde{M}(y,\eta)$ used in equation (38), with $y=0$. In the first two terms on the right side of equation (51), $\dot{z}$ and $\ddot{z}$ can be related to w by means of $h_{\ddot{z}}^{w}$ (the Fourier transform of the function $H_{\ddot{z}}^{w}$ presented in eq. (50)) and the lift directly due to turbulence obtained in the first part of this report, so that these two terms can be written in the form

$$\frac{1}{b}\int_{-\infty}^{\infty}h_M(t_1)\,dt_1\int_{-b/2}^{b/2}\gamma(y)\,w(U(t-t_1),y)\,dy$$

and, hence, equation (51) becomes

$$M_B(t)=\frac{1}{b}\int_{-\infty}^{\infty}dt_1\int_{-b/2}^{b/2}[h_L(t_1)\gamma_M(y)+h_M(t_1)\gamma(y)]\,w(U(t-t_1),y)\,dy \tag{52}$$

The required influence function for the bending moment is, thus,

$$h_{M_B}(y,t)=\frac{1}{b}[h_L(t)\gamma_M(y)+h_M(t)\gamma(y)] \tag{53}$$

Although the two terms of this function are products of a time-dependent and a space-dependent constituent, as in equation (5), their sum cannot be split up in this manner. Hence, the techniques used in the first part of this paper are not directly applicable. The general treatment of problems involving influence functions for which the assumption of equation (5) is not valid will be considered in the last part of this paper. However, in this section a special technique will be used that applies to cases for which the influence function can be expressed as a sum of several terms (two in this case), each of which can be expressed as a product of two functions, which depend, respectively, on time alone and distance along the span alone. (See also ref. 13.) This approach is more convenient than the general approach of the last part of this report when the number of terms is two or, possibly, three. (Although in this section only two terms will be considered, the generalization to three or more terms is straightforward.) When the number of terms is greater than three, the general approach becomes more covenient.

If the value of M_B given by equation (52) for $t+\tau$ is multiplied by the value for t and the result is averaged, and if the Fourier transform of the resultant correlation function is then taken, the following expression is obtained for the spectrum of the bending moment:

$$\varphi_{M_B}(\omega)=|H_L(\omega)|^2\varphi_{w_{e_2}}(\omega)+|H_M(\omega)|^2\varphi_{w_e}(\omega)+2\mathrm{R}\{H_L(\omega)H_M^*(\omega)\}\varphi_{w_{e_1}}(\omega) \tag{54}$$

where the symbols R{ } and * designate, respectively, the real part and the complex conjugate of a complex number. In this equation $H_M(\omega)$ and $H_L(\omega)$ are the Fourier transforms of $h_M(t)$ and $h_L(t)$, $\varphi_{w_e}(\omega)$ is the previously defined averaged spectrum for the lift, and $\varphi_{w_{e_1}}$ and $\varphi_{w_{e_2}}$ are averaged

spectra obtained in a similar manner but with the value of Γ given by equation (12) replaced by

$$\left.\begin{aligned}\Gamma_1(\eta)&=\frac{2}{b}\int_{-b/2}^{(b/2)-\eta}\gamma(y)\,\gamma_{M_s}(y+\eta)\,dy\\ \Gamma_2(\eta)&=\frac{2}{b}\int_{-b/2}^{(b/2)-\eta}[\gamma_{M_s}(y)\,\gamma_{M_s}(y+\eta)+\gamma_{M_a}(y)\,\gamma_{M_a}(y+\eta)]\,dy\end{aligned}\right\}\quad(55)$$

where the subscripts s and a refer to the symmetric and antisymmetric parts of γ_M, respectively.

The contribution of the antisymmetric part of γ_M to Γ_2 and, hence, to the spectrum for the bending moment stems basically from the asymmetry of the instantaneous distribution of gust intensity over the span. This asymmetry gives rise to a rolling moment (which was considered in the first part of this report) and, hence, to rolling motions, which contribute additional bending moments due to the aerodynamic and inertia loads associated with these motions. If, for the purpose of calculating the bending moment due to symmetric flight through turbulent air alone, these motions are disregarded, then the contribution of γ_M to Γ_2 should be disregarded as well. The problem of combined symmetric and antisymmetric motion will be considered presently.

As pointed out in reference 13, the mean-square bending moment calculated in this manner may be smaller or greater than the value calculated by ignoring spanwise variations in gust intensity. If the mass of the airplane is almost entirely contained in the fuselage, the decrease in the lift which results from taking these variations into account causes a decrease in bending moment. However, if most of the mass is in the wing, the net bending moments (aerodynamic less inertia) for a uniform spanwise gust are very small, and the effect of taking spanwise variations of gust intensity into account is to increase the mean-square bending moments.

Two-degree-of-freedom case.—For the two-degree-of-freedom (short-period) case the analysis given for the normal acceleration in the preceding section can be extended as follows: As indicated in equation (44) the transfer function for $\ddot{z}$ is now

$$H_{\ddot{z}}^{w}(\omega)=\left[-\frac{1}{m}\frac{\omega^2+(UM_{\dot{w}}+M_q)i\omega+UM_w}{-\omega^2+B_0i\omega+C_0}\right]m(-Z_w')\,\phi(k)+\left[\frac{1}{I_y}\frac{U(-Z_w)}{-\omega^2+B_0i\omega+C_0}\right]I_yM_w'\,\phi(k)\quad(56)$$

(The following analysis can be applied equally well to $\ddot{\theta}$ by using $H_{\ddot{\theta}}^{w}(\omega)$ instead of $H_{\ddot{z}}^{w}(\omega)$.)

If the expressions inside the brackets of equation (56) are designated, respectively, by $H_1(\omega)$ and $H_2(\omega)$, and their Fourier transforms by $h_1(t)$ and $h_2(t)$, then, as a result of the definitions of Z_w' and M_w',

$$\ddot{z}(t)=\int_{-\infty}^{\infty}h_1(t_1)\,L(t-t_1)\,dt_1+\int_{-\infty}^{\infty}h_2(t_1)\,M(t-t_1)\,dt_1\quad(57)$$

where $L(t)$ and $M(t)$ are the instantaneous lift and pitching moment due to the vertical component of atmospheric turbulence, which have been obtained in the first part of this report. The calculation of $\varphi_{\ddot{z}}(\omega)$ or of $\overline{\ddot{z}^2}$ thus requires not only the spectra of L and M, the calculation of which has been discussed, but also the cross spectrum of L and M, which has to be calculated directly from equations (4) and (42a). The result is

$$\begin{aligned}\varphi_{\ddot{z}}(\omega)=&|H_1(\omega)|^2\,|H(\omega)|^2\,\varphi_{w_g}(\omega)+|H_2(\omega)|^2\Big[|H_w(\omega)|^2\,\varphi_{w_g}(\omega)+\\&|H_t(\omega)|^2\,\varphi_w(\omega)+2\mathrm{R}\left\{e^{i\frac{\omega}{U}r_t}H_t(\omega)\,H_w^*(\omega)\right\}\varphi_{w_g^*}(\omega,0)\Big]+\\&2\,[\mathrm{R}\{H_1(\omega)\,H_2^*(\omega)\,H(\omega)\,H_w^*(\omega)\}\,\varphi_{w_g}(\omega)+\\&\mathrm{R}\{H_1(\omega)\,H_2^*(\omega)\,H(\omega)\,H_t^*(\omega)\}\,\varphi_{w_g^*}(\omega,0)]\end{aligned}\quad(58)$$

where the first two terms represent the contributions of the spectra of L and M, respectively (see eqs. (14) and (42b)), and the third represents the contribution of the cross spectrum of L and M. For the present purpose the functions $H(\omega)$, $H_w(\omega)$, and $H_t(\omega)$ can be expressed as

$$\begin{aligned}H(\omega)&=m(-Z_w)\,\phi(k)\\ H_w(\omega)&=m\,\Delta x_a\,(-Z_w)\,\phi(k)\\ H_t(\omega)&=[I_{yy}M_w-m\,\Delta x_a\,(-Z_w)]\,\phi(k)\end{aligned}$$

where Δx_a is the distance from the aerodynamic center (tail off) to the airplane center of gravity. This definition of the contributions of the wing and tail to the pitching moment is based on the considerations that the direct contribution of the wing can be estimated with good accuracy and the total pitching moment is likely to be known from experiments, so that the contribution of the tail (which includes the effect of the wing lift on the downwash at the tail) can be determined as the difference of the two. The functions $\varphi_{w_g}(\omega)$ and $\varphi_{w_g^*}(\omega,0)$ have been defined in the first part of this report. In view of the fact that the function $\phi(k)$ contained in some of the terms of equation (58) always appears in terms multiplied by others which contain $\phi^*(k)$, only the absolute square of this function is required, as before.

SPECIAL PROBLEMS RELATED TO THE LATERAL MOTION OF LARGE AIRPLANES

The equations of motion in the lateral degrees of freedom (roll, yaw, sideslip) have the same form and can be solved in the same way as the equations for the longitudinal motion. (See pp. III–53 to III–67 of ref. 11.) Again it is convenient to cast the problem in the form used in a stability analysis in order to take advantage of the results of such an analysis. For a small airplane it is necessary only to replace the terms due to rudder deflection by corresponding terms involving side gusts, namely,

$$Y_{\delta_R}^{*}\,\delta_R \text{ by } Y_v\frac{v}{U}\phi'(k)$$

$$L_{\delta_R}\,\delta_R \text{ by } L_\beta\frac{v}{U}\phi'(k)$$

$$N_{\delta_R}\,\delta_R \text{ by } N_\beta\frac{v}{U}\phi'(k)$$

where $\phi'(k)$ is a suitable side-force attenuation function for side gusts and the notation of reference 11 is used for the other terms. The terms corresponding to aileron deflection can be disregarded for the small airplane. In the lateral degrees of freedom the small airplane thus reacts only to side gusts. On the other hand, the large airplane also reacts in the lateral degrees of freedom to vertical gusts through the rolling moment calculated in the first part of the present report. If this rolling moment is to be included, it replaces the term $L_{\delta_A}\,\delta_A$ used in reference 11.

Instead of treating all three degrees of freedom simultaneously, in stability analyses two one-degree-of-freedom cases are often considered, namely, the one of sideslip alone, with angle of yaw equal and opposite to angle of sideslip (the Dutch roll case), and the one of rolling alone.

The Dutch roll case may be used for gust-load purposes in connection with yawing and sideslipping motion due to lateral gusts, provided the phase of the motion is not important. (As may be noted from the preceding sections, the phase of a transfer function is important only in terms involving cross spectra.) Also, the Dutch roll case may prove useful in calculating the vertical-tail loads resulting from flight through turbulent air, particularly if the human or automatic pilot holds the wings substantially level by means of the ailerons. However, in general it does not appear to be as satisfactory an approximation as the one- and two-degree-of-freedom approximations for longitudinal motion.

For rolling motions due to rolling moments, the single-degree case of rolling alone appears to furnish a very good approximation. Although the rolling motion causes yawing and sideslipping motions, these motions do not appear to reflect on the rolling motion. Thus, the rolling motion which results from the rolling moment can probably be calculated fairly accurately without regard to the other lateral degrees of freedom. Furthermore, within the assumption of small motions, the stresses associated with these other lateral degrees of freedom do not generally contribute appreciably to those associated with the longitudinal degrees of freedom in the parts of the structure for which the latter are critical, such as the wing (although they may be critical for other parts of the structure, such as the vertical tail). Therefore these degrees of freedom (yaw and sideslip) will be ignored in the treatment of the large flexible airplane in the last part of this paper. However, if chordwise bending effects (deformations parallel to the chord) are important, as they may be in some cases at speeds close to the flutter speed, these other lateral degrees of freedom may have to be included in the analysis.

For the large airplane, which responds in the lateral degrees of freedom both to vertical gusts and to side gusts, the superposition of the resulting responses, such as stresses, may be effected in the way indicated for the interaction of horizontal and vertical gusts. If the turbulence is isotropic, the vertical and lateral gusts are statistically independent for points in the XY-plane, so that the spectrum of a given response is equal to the sum of the spectrum of that part of the given response which is due to vertical gusts and the spectrum of that part of the response which is due to lateral gusts.

COMBINATION OF THE RESULTS OBTAINED FROM ANALYSES OF THE LONGITUDINAL AND LATERAL DEGREES OF FREEDOM

The instantaneous wing stresses depend both on the motions in the longitudinal degrees of freedom (primarily vertical motion and pitching) and on those in the lateral degrees of freedom (primarily rolling). The purpose of this section is to indicate how the stresses associated with vertical motion and pitching can be combined with those associated with rolling due to vertical gusts, particularly in the case of a large rigid airplane. (A small airplane, flexible or rigid, does not roll as a result of the action of vertical gusts, and for the large flexible airplane it is more convenient to consider rolling motion simultaneously with the other motions, so that the superposition is effected automatically in the process of obtaining the required transfer functions.) For all airplanes the effect of side gusts can then be taken into account, if isotropy is assumed, by adding the stress spectra directly.

In this section the instantaneous stress at a given part of the wing will be assumed to be proportional to the instantaneous bending moment at that section of the wing, so that consideration can be confined to this bending moment; also, the airplane will be considered to be free to move in only two degrees of freedom, namely, vertical motion and rolling. The extension of the following arguments to stresses which depend on the vertical shear and the torque as well, and the inclusion of pitching as an additional degree of freedom, can be effected readily and will not alter the conclusion reached here.

When rolling motions of the airplane are taken into account, the bending moment due to the aerodynamic forces associated with rate of roll and to the inertia load associated with rolling acceleration can be expressed in terms of the rolling moment by a superposition integral. In turn, the rolling moment can be expressed in terms of a superposition integral involving the instantaneous gust intensities along the span, the influence function $\gamma'(y)$ used in the first part of the report, and an associated response function $h'_M(t)$. Hence, equation (52) is modified by the inclusion of a third term and becomes

$$M_B(t)=\int_{-\infty}^{\infty} dt_1 \int_{-b/2}^{b/2} [h_L(t_1)\gamma_M(y)+h_M(t_1)\gamma(y)+ h'_M(t_1)\gamma'(y)]w(U(t-t_1),y)\,dy$$

If the spectrum for M_B is now calculated in the manner used previously, the following result is obtained:

$$\varphi_{M_B}(\omega)=|H_L(\omega)|^2\varphi_{w_{\delta_2}}(\omega)+|H_M(\omega)|^2\varphi_{w_\delta}(\omega)+ 2\mathrm{R}\{H_L(\omega)H_M^*(\omega)\}\varphi_{w_{\delta_1}}(\omega)+|H'_M(\omega)|^2\varphi_{w_{\delta_3}}(\omega)+ 2\mathrm{R}\{H_L(\omega)H'^*_M(\omega)\}\varphi_{w_{\delta_4}}(\omega) \quad (59)$$

where $H'_M(\omega)$ is the Fourier transform of $h'_M(t)$, and where

$\varphi_{w_{e_3}}(\omega)$ and $\varphi_{w_{e_4}}(\omega)$ can be obtained from equation (12) with the following values of Γ_3 and Γ_4, respectively:

$$\Gamma_3(\eta)=\frac{2}{b}\int_{-b/2}^{(b/2)-\eta}\gamma'(y)\gamma'(y+\eta)\,dy$$

$$\Gamma_4(\eta)=\frac{2}{b}\int_{-b/2}^{(b/2)-\eta}\gamma'(y)\gamma_{M_a}(y+\eta)\,dy$$

(The function $\Gamma_3(\eta)$ is four times the function $\Gamma'(\eta)$ considered previously in connection with the rolling moment. This factor of four must be taken into account in $h'_M(t)$.)

The spectrum φ_{M_B} may be considered to consist of two parts: The first three terms listed in equation (59), but excluding the contribution of γ_{M_a} to $\varphi_{w_{e_2}}$ (see eq. (55)), represent the contribution of the symmetric parts of the instantaneous gust distributions or the contribution associated with symmetric motion; the last two terms and the contribution of γ_{M_a} to $\varphi_{w_{e_2}}$ represent the contribution of the antisymmetric parts of the instantaneous gust distributions or the contribution associated with rolling motion. Therefore, the power spectrum of the stress due to gusts and combined symmetric and rolling motion resulting from the gusts is the sum of the two power spectra (that for the gusts and symmetric motion alone and that for the gusts and rolling motion alone), provided the direct contribution of the gusts is split up into a symmetric and antisymmetric part and each is taken into account only once, in connection with the appropriate type of motion. The cross-correlation terms between the symmetric and antisymmetric contributions to the stress can be shown to involve integrals which contain products of symmetric and antisymmetric influence functions and, hence, vanish, so that the cross correlations are zero; hence, the two parts of the combined spectrum are statistically independent and, therefore, directly additive.

DYNAMICS OF THE SMALL FLEXIBLE AIRPLANE

The purpose of this part of the report is to consider the transfer functions relating the stresses at various points of a small flexible airplane to the vertical gusts which cause them. The longitudinal and lateral degrees of freedom are still separable, and only the longitudinal degrees will be considered; the lateral degrees, which are involved in analysis of the response to side gusts acting on the vertical tail, can be analyzed in the same way. Therefore, for this case only one-half of the wing need be considered as a result of the symmetry (or antisymmetry, in the case of the lateral degrees of freedom) of the problem.

The method which is outlined in this part consists in an extension of the numerical-integration method of aeroelastic analysis described in reference 14 to sinusoidal motions of the airplane. This extension takes into account the facts that the aerodynamic forces now have out-of-phase as well as in-phase parts and that vertical deflections must now be calculated separately because the structural deformations can no longer be characterized by angle-of-attack changes. Also, the "rigid-body" degrees of freedom (vertical and pitching motion of the airplane as a whole and structural deformations of the tail) are now taken into account.

The result is a set of linear algebraic equations (which serve as an approximation to the ordinary differential equations that characterize the problem) for the airplane motions and deformations in terms of the applied aerodynamic forces directly due to gusts. The desired transfer functions can then be obtained from solutions of these equations at various frequencies, and the power spectra of the stresses are given by the product of the absolute square of these transfer functions and the point power spectrum of the vertical component of turbulence. The same equations may be used to calculate with little additional effort certain aeroelastic effects, such as the static aeroelastic deformations and the flutter speed, which are usually obtained in separate analyses.

LOADS APPLIED TO THE WING

The loads applied to the wing stem from three sources: The aerodynamic loads directly due to the action of the gusts, the aerodynamic loads due to the motions of the airplane, and the inertia loads.

The lift and pitching moment (about the elastic axis) per unit span on a two-dimensional airfoil undergoing sinusoidal angle-of-attack changes and vertical motions in incompressible flow are (see ref. 15)

$$\left.\begin{aligned}
l_a&=2\pi qc\left\{C(k)\left[(1+2e_4ik)\alpha-ik\frac{z}{c/2}\right]+\right.\\
&\qquad\left.\left(\frac{ik}{2}-e_3k^2\right)\alpha+\frac{k^2}{2}\frac{z}{c/2}\right\}\\
m_a&=2\pi qc^2\left\{C(k)e_1\left[(1+2e_4ik)\alpha-ik\frac{z}{c/2}\right]-\right.\\
&\qquad\left.\left[\frac{e_4}{2}ik-\left(\frac{1}{32}+e_3^2\right)k^2\right]\alpha-\frac{e_3}{2}k^2\frac{z}{c/2}\right\}
\end{aligned}\right\}\tag{60}$$

The terms multiplied by $C(k)$ are referred to as the circulatory terms because they are calculated from the bound and shed vorticity, and the others are referred to as the potential terms. The potential terms are in the nature of additional-apparent-mass effects, and all those that involve k^2 are usually treated together with the inertia forces rather than with the aerodynamic forces. For compressible flow, however, the forces are calculated in a different manner, and the division of the forces into circulatory and potential parts then has little meaning. Consequently, in order to facilitate the extension of this analysis to compressible flow, this distinction will not be made herein.

The aerodynamic forces are therefore written as

$$\left.\begin{aligned}
l_a&=2\pi qc\left[\tilde{C}_1(k)\alpha+\tilde{C}_2(k)\frac{z}{c/2}\right]\\
m_a&=2\pi qc^2\left[\tilde{C}_3(k)\alpha+\tilde{C}_4(k)\frac{z}{c/2}\right]
\end{aligned}\right\}\tag{61}$$

so that for incompressible flow

$$\tilde{C}_1(k)=(1+2e_4ik)C(k)+\frac{ik}{2}-e_3k^2$$

$$\tilde{C}_2(k)=-ikC(k)+\frac{k^2}{2}$$

$$\tilde{C}_3(k)=(1+2e_4ik)e_1C(k)-\frac{e_4}{2}ik+\left(\frac{1}{32}\mp e_3^2\right)k^2$$

$$\tilde{C}_4(k)=-ike_1C(k)-\frac{e_3}{2}k^2$$

In order to calculate the lift at a given point of a wing of finite span an appropriate Green's function is required. An approximation to this function based on a reciprocity theorem of linearized lifting-surface theory, is given in the first part of this report; as used for the computations of that part, this function implies the assumptions that the spanwise distribution of the lift for oscillations of the wing as a whole is substantially invariant with frequency and that this distribution is the same in direct as in reverse flow. Neither of these assumptions is essential to the analysis but both, and particularly the first, simplify it considerably. With these assumptions, the desired lift distribution is then given by expressions of the form of equations (32a) and (34).

For the present purpose, however, a set of aerodynamic influence coefficients is required, rather than influence functions. Such a set of coefficients, based on the same ideas, can be obtained readily by the techniques used in references 9 and 10. The result may be expressed as follows:

$$\{l\}_a=C_{L_\alpha}\bar{c}q\left\{\tilde{C}_1(k)[Q]\{\alpha\}+\tilde{C}_2(k)[Q]\left\{\frac{z}{\bar{c}/2}\right\}\right\} \quad (62a)$$

where the aerodynamic-influence-coefficient matrix $[Q]$ is defined by

$$[Q]=(1-K)\lfloor\gamma\rfloor\{1\}\lfloor I\rfloor\lfloor\gamma\rfloor+K\lfloor\gamma\rfloor$$

where, in turn, $\{1\}$ is a unit column matrix, and $\lfloor I\rfloor$ is a row of integrating coefficients suitable for integrating a continuous function for a range of its argument from 0 to 1. Thus, for instance, if n equidistant points on the semispan are considered, and n is odd, then according to Simpson's rule

$$\lfloor I\rfloor=\frac{1}{n-1}\left\lfloor\frac{1}{3},\frac{4}{3},\frac{2}{3},\frac{4}{3},\cdots\frac{4}{3},\frac{1}{3}\right\rfloor$$

Very little information is available concerning the spanwise distributions of the pitching moment on wings of finite span in unsteady flow. By means of the reciprocity theorems an appropriate Green's function could be estimated if the lift distribution for wings with parabolic camber were known; however, such lift distributions do not appear to have been calculated for wings of finite span in unsteady flow. In fact, relatively little is known about moment distributions even in steady flow. However, the available information indicates that the local center of pressure does not appear to be very sensitive to the lift distribution. (See ref. 9, for instance.) It will be assumed that this is also true in unsteady flow at a given frequency, and that, furthermore, these centers of pressure are given by two-dimensional theory. With this assumption the moment can be written as

$$\{m_T\}_a=C_{L_\alpha}\bar{c}q\left\{\tilde{C}_3(k)\lfloor c\rfloor[Q]\{\alpha\}+\tilde{C}_4(k)\lfloor c\rfloor[Q]\left\{\frac{z}{\bar{c}/2}\right\}\right\} \quad (62b)$$

The lift and moment distribution due to the gust can be calculated in a similar manner. In the following analysis, the magnitude of the gust intensity is considered to be unity, and the longitudinal reference point is the intersection of the elastic axis and the wing root, so that the instantaneous gust intensity at any station y is

$$w=e^{-ik\frac{|y|}{\bar{c}/2}\tan\Lambda} \quad (63)$$

With this function w,

$$\left.\begin{aligned}\{l\}_g&=\frac{C_{L_\alpha}\bar{c}q\phi(k)}{U}[Q]\{w\}\\ \{m_T\}_g&=\frac{C_{L_\alpha}\bar{c}q\phi(k)}{U}\lfloor e_1c\rfloor[Q]\{w\}\end{aligned}\right\} \quad (64)$$

where $\phi(k)$ is the Sears function, as before.

Finally, the inertia loads are

$$l_i=-\tilde{m}\ddot{z}+\tilde{m}e_2c\ddot{\alpha}$$

$$m_{T_i}=-(r^2+(e_2c)^2)\tilde{m}\ddot{\alpha}+\tilde{m}e_2c\ddot{z}$$

or

$$\left.\begin{aligned}\{l\}_i&=-\frac{q}{\frac{\rho}{2}\left(\frac{\bar{c}}{2}\right)^2}k^2\lfloor\tilde{m}e_2c\rfloor\{\alpha\}+\frac{q}{\frac{\rho}{2}\left(\frac{\bar{c}}{2}\right)^2}k^2\lfloor\tilde{m}\rfloor\{z\}\\ \{m_T\}_i&=\frac{q}{\frac{\rho}{2}\left(\frac{\bar{c}}{2}\right)^2}k^2\lfloor r^2+(e_2c)^2\rfloor\lfloor\tilde{m}\rfloor\{\alpha\}-\frac{q}{\frac{\rho}{2}\left(\frac{\bar{c}}{2}\right)^2}k^2\lfloor\tilde{m}e_2c\rfloor\{z\}\end{aligned}\right\} \quad (65)$$

The loads applied to the wing can thus be written, in summary, as

$$\begin{Bmatrix} l \\ m_T \end{Bmatrix} = q \left[\begin{array}{c|c} 2C_{L_\alpha}\tilde{C}_2(k)[Q]+ \dfrac{k^2}{\frac{\rho}{2}\left(\frac{\bar{c}}{2}\right)^2}[\tilde{m}] & C_{L_\alpha}\bar{c}\tilde{C}_1(k)[Q]- \dfrac{k^2}{\frac{\rho}{2}\left(\frac{\bar{c}}{2}\right)^2}[me_2c] \\ \hline 2C_{L_\alpha}\tilde{C}_4(k)[c][Q]- \dfrac{k^2}{\frac{\rho}{2}\left(\frac{\bar{c}}{2}\right)^2}[\tilde{m}e_2c] & C_{L_\alpha}\bar{c}\tilde{C}_3(k)[c][Q]+ \dfrac{k^2}{\frac{\rho}{2}\left(\frac{\bar{c}}{2}\right)^2}[r^2+(e_2c)^2][m] \end{array}\right] \begin{Bmatrix} z \\ \alpha \end{Bmatrix} + q \left[\begin{array}{c} \dfrac{C_{L_\alpha}\bar{c}\phi(k)}{U}[Q] \\ \hline \dfrac{C_{L_\alpha}\bar{c}\phi(k)}{U}[e_1c][Q] \end{array}\right] \begin{Bmatrix} w \end{Bmatrix} \tag{66}$$

LOADS APPLIED TO THE TAIL

The loads applied to the tail are similar in nature to those applied to the wing, but the tail experiences additional loads as a result of the downwash produced by the lift on the wing. Again, little is known about the downwash in unsteady flow, and even in steady flow the downwash cannot be predicted accurately because of boundary-layer effects on the fuselage and the wing root. Consequently, even in steady-flow analyses experimental results are usually relied upon.

In the following analysis, the assumption is therefore made that experimental results are available for steady flow, in the form of the downwash derivative $\partial\epsilon/\partial\alpha$. In order to determine the attenuation of this value with frequency, the results of the analysis of reference 16 will be used. These results indicate that the time variation of the tail lift due to the downwash caused by the wing lift which results from a unit jump in the wing angle of attack can be approximated by an immediate jump in the tail lift of —0.16 of the steady-state value and another jump to the steady-state value after the time required to travel the distance from the 45-percent-chord point of the wing to the quarter-chord point of the tail plus another eighth of the chord length. Hence, for sinusoidal angle-of-attack changes the tail lift due to downwash is

$$(L_{t_\epsilon})_{\alpha,z} = -C_{L_{\alpha_t}} q_t S_t \frac{\partial\epsilon}{\partial\alpha}\left[-0.16+1.16e^{-ik\left(\frac{x_t'}{\bar{c}/2}+\frac{1}{4}\frac{c_r}{\bar{c}}\right)}\right]\left[(1+2e_4ik)\alpha_r - ik\frac{z_r}{\bar{c}/2}\right] \tag{67}$$

where x_t' is the distance from the intersection of the elastic axis and the wing root (assumed for this purpose to be at the 45 percent point on the root chord) to the aerodynamic center of the tail. As pointed out in reference 16, this approximation is valid only for $k<0.35$; however, this range is adequate for the present purpose.

Similarly, the downwash associated with the wing lift due to sinusoidal gusts gives rise to a tail lift which, within this approximation, is

$$(L_{t_\epsilon})_g = -C_{L_{\alpha_t}} q_t \frac{S_t}{U}\frac{\partial\epsilon}{\partial\alpha}\left[-0.16+1.16e^{-ik\left(\frac{x_t'}{\bar{c}/2}+\frac{1}{4}\frac{c_r}{\bar{c}}\right)}\right] e^{-0.6ik\frac{c_r}{\bar{c}}} w_r \tag{68}$$

(The additional lag represents the time required to travel the 0.6 root semichords from the 45-percent-chord point of the root, which is the reference point for the gusts, to the 75-percent-chord point of the wing root, which is assumed to be the point governing the lift at the wing root, inasmuch as it is the centroid of the influence function for the chordwise pressure distribution.)

The other aerodynamic forces are those due to the motions of the airplane, those due to the tail deformations, and those directly due to the gusts. On the basis of the assumptions made in the preceding section, these forces are

$$L_{t_a} = C_{L_{\alpha_t}} q_t S_t\left[\tilde{C}_5(k)\alpha_r + \tilde{C}_6(k)\frac{z_r}{\bar{c}/2} + \tilde{C}_7(k)\Delta\alpha + \tilde{C}_8(k)\frac{\Delta z}{\bar{c}/2}\right] \tag{69}$$

$$L_{t_g} = \frac{C_{L_{\alpha_t}} q_t S_t}{U}\phi\left(\frac{c_t}{\bar{c}}k\right) e^{-ik\frac{x_t'-\frac{c_t}{4}}{\bar{c}/2}} \tag{70}$$

where

$$\tilde{C}_5(k) = \left(1+2ik\frac{x_t'+\frac{c_t}{2}}{\bar{c}}\right)C\left(\frac{c_t}{\bar{c}}k\right)+\frac{i}{2}\frac{c_t}{\bar{c}}k-\frac{c_t}{\bar{c}}\frac{x_t'+\frac{c_t}{4}}{\bar{c}}k^2$$

$$\tilde{C}_6(k) = -ikC\left(\frac{c_t}{\bar{c}}k\right)+\frac{1}{2}\frac{c_t}{\bar{c}}k^2$$

$$\tilde{C}_7(k) = \left(1+2ik\frac{e_{4_t}c_t}{\bar{c}}\right)C\left(\frac{c_t}{\bar{c}}k\right)+\frac{i}{2}\frac{c_t}{\bar{c}}k-e_{3_t}\left(\frac{c_t}{\bar{c}}\right)^2k^2$$

and α_r and z_r are the angle of attack and vertical displacement of the airplane at the wing root.

The inertia load on the tail is

$$L_{t_i} = -m_t(\ddot{z}_r+\Delta\ddot{z}-x_t'\ddot{\alpha}_r)$$

or

$$L_{t_i} = \frac{m_t q k^2}{\frac{\rho}{2}\left(\frac{\bar{c}}{2}\right)^2}(z_r+\Delta z-x_t'\alpha_r) \tag{71}$$

Here the center of gravity of the tail has been assumed to coincide with its aerodynamic center; in order to remove this assumption it is necessary only to add (or subtract) the distance between the two to x_t' in equation (71).

The normal forces on the tail can then be summarized as follows:

$$L_t=q[F_1(k)z_r+F_2(k)\alpha_r+F_3(k)\Delta\alpha+F_4(k)\Delta z+F_5(k)w_t] \tag{72}$$

where

$$F_1(k)=2C_{L_{\alpha_t}}\frac{q_t}{q}\frac{S_t}{\bar{c}}\left\{\tilde{C}_6(k)+ik\frac{\partial\epsilon}{\partial\alpha}\left[-0.16+1.16e^{-ik\left(\frac{x_t'}{\bar{c}/2}+\frac{1}{4}\frac{c_t}{\bar{c}}\right)}\right]\right\}+\frac{m_t}{\frac{\rho}{2}\left(\frac{\bar{c}}{2}\right)^2}k^2$$

$$F_2(k)=C_{L_{\alpha_t}}\frac{q_t}{q}S_t\left\{\tilde{C}_5(k)-(1+2e_tik)\frac{\partial\epsilon}{\partial\alpha}\left[-0.16+1.16e^{-ik\left(\frac{x_t'}{\bar{c}/2}+\frac{1}{4}\frac{c_t}{\bar{c}}\right)}\right]\right\}-\frac{m_tx_t'}{\frac{\rho}{2}\left(\frac{\bar{c}}{2}\right)^2}k^2$$

$$F_3(k)=C_{L_{\alpha_t}}\frac{q_t}{q}S_t\tilde{C}_7(k)$$

$$F_4(k)=2C_{L_{\alpha_t}}\frac{q_t}{q}\frac{S_t}{\bar{c}}\tilde{C}_6(k)+\frac{m_t}{\frac{\rho}{2}\left(\frac{\bar{c}}{2}\right)^2}k^2$$

$$F_5(k)=\frac{C_{L_{\alpha_t}}q_tS_t}{U}\left\{\phi\left(\frac{c_t}{\bar{c}}k\right)e^{ik\frac{c_t}{2\bar{c}}}-\frac{\partial\epsilon}{\partial\alpha}\left[-0.16+1.16e^{-ik\left(\frac{x_t'}{\bar{c}/2}+\frac{1}{4}\frac{c_r}{\bar{c}}\right)}\right]e^{ik\left(\frac{x_t'}{\bar{c}/2}-0.6\frac{c_r}{\bar{c}}\right)}\right\}$$

and

$$w_t=e^{-ik\frac{x_t}{\bar{c}/2}}$$

The pitching moments corresponding to these normal forces can be obtained in the manner employed for the wing. However, inasmuch as the tail chord is usually small compared with the fuselage length, the travel of the center of pressure of the tail is small compared with the length x_t'. Hence, the center of pressure will be assumed to remain at the aerodynamic center of the tail, and the pitching moments are then $-x_t'$ times the corresponding forces, so that

$$M_t=-qx_t'[F_1(k)z_r+F_2(k)\alpha_r+F_3(k)\Delta\alpha+F_4(k)\Delta z+F_5(k)w_t] \tag{73}$$

WING AND TAIL DEFORMATIONS

The wing deformations may be calculated either from structural influence coefficients or from the bending and torsion stiffnesses of the wing used in conjunction with simple beam theory. The latter approach will be followed here, based on the method of reference 12.

The bending and torsion moments on the wing structure may be obtained by integrating the applied loads. If numerical methods are employed to perform these integrations the results may be written as follows:

$$\begin{Bmatrix} M_B \\ M_T \end{Bmatrix}=\left[\begin{array}{c|c} \frac{(b/2)^2}{\cos\Lambda}[\mathrm{II}] & -\sin\Lambda\frac{b}{2}[\mathrm{I}] \\ \hline [0] & \cos\Lambda\frac{b}{2}[\mathrm{I}] \end{array}\right]\begin{Bmatrix} l \\ m_T \end{Bmatrix} \tag{74}$$

Similarly, the deformations are

$$\begin{Bmatrix} z-z_r \\ \alpha-\alpha_r \end{Bmatrix}=\left[\begin{array}{c|c} \left(\frac{b}{2\cos\Lambda}\right)^2[\mathrm{II}'']\left[\frac{1}{EI}\right] & [0] \\ \hline \frac{b}{2}[\mathrm{I}'']\left[\frac{1}{GJ}\right] & -\frac{b}{2}\tan\Lambda[\mathrm{I}'']\left[\frac{1}{EI}\right] \end{array}\right]\begin{Bmatrix} M_B \\ M_T \end{Bmatrix}$$

$$=\left[\begin{array}{c|c} \left(\frac{b}{2}\right)^4\frac{1}{\cos^2\Lambda}[\mathrm{II}'']\left[\frac{1}{EI}\right][\mathrm{II}] & -\left(\frac{b}{2}\right)^3\frac{\sin\Lambda}{\cos^2\Lambda}[\mathrm{II}'']\left[\frac{1}{EI}\right][\mathrm{I}] \\ \hline \left(\frac{b}{2}\right)^3\frac{1}{\cos\Lambda}[\mathrm{I}'']\left[\frac{1}{GJ}\right][\mathrm{II}] & -\sin\Lambda\left(\frac{b}{2}\right)^2[\mathrm{I}'']\left[\frac{1}{EI}+\frac{1}{GJ}\right][\mathrm{I}] \end{array}\right]\begin{Bmatrix} l \\ m_T \end{Bmatrix} \tag{75}$$

where the integrating matrices (see ref. 12) perform the following operations:

$$[\mathrm{I}]\{f\}\Rightarrow\int_\xi^1 f(\xi')d\xi'$$

$$[\mathrm{II}]\{f\}\Rightarrow\int_\xi^1\int_{\xi'}^1 f(\xi'')d\xi''d\xi'$$

$$[\mathrm{I}'']\{f\}\Rightarrow\int_0^\xi f(\xi')d\xi'$$

$$[\mathrm{II}'']\{f\}\Rightarrow\int_0^\xi\int_0^{\xi'} f(\xi'')d\xi''d\xi'$$

These integrating matrices may be based on the trapezoidal rule, Simpson's rule, or any other numerical method; the intervals chosen for ξ $(0 \leqq \xi \leqq 1)$ need not be of constant width unless a specific rule demands a uniform spacing.

The structural deformations of the wing may then be written in terms of the applied loads as

$$\begin{Bmatrix} z-z_r \\ \alpha-\alpha_r \end{Bmatrix} = q \left[\begin{array}{c|c} ① & ② \\ \hline ③ & ④ \end{array}\right] \begin{Bmatrix} z \\ \alpha \end{Bmatrix} + q \left[\begin{array}{c} ⑤ \\ \hline ⑥ \end{array}\right] \{w\} \tag{76}$$

where the submatrices [①], [②], [③], [④], [⑤], and [⑥] designate, respectively, the four quadrants and two halves of the matrices, obtained by postmultiplying the square matrix of equation (75) by the square and the rectangular matrix of equation (66), respectively.

For the purpose of the present analysis, which is concerned primarily with the wing stresses, the tail deformations are treated by including only the vertical displacement and angle-of-attack change of the tail as a whole due to the tail load. These quantities may be obtained from a static test which consists in applying a concentrated normal load at the aerodynamic center of the tail and measuring these deformations. They may also be obtained from a vibration test in which the deflection curve of the rear part of the fuselage in the lowest vertical-bending mode is measured; in this case the desired spring constants can be deduced from the frequency relation of a simple mass oscillator in terms of the measured frequency and of the mass of the empennage (including the part of the fuselage which may be considered to move with the empennage). In the absence of such tests these constants may be calculated in an analogous manner.

The tail deformations may then be written as

$$\left.\begin{aligned} \Delta\alpha &= -K_1 L_t \\ \Delta z &= K_2 L_t \end{aligned}\right\} \tag{77}$$

so that, also,

$$\Delta z = -\frac{K_2}{K_1}\Delta\alpha \tag{78}$$

Inasmuch as these deformations are not independent of each other, only one need be retained in the analysis. Therefore, if Δz is eliminated by means of equation (78), $\Delta\alpha$ can then be obtained in a form similar to that used for the wing deformations in equation (76):

$$\Delta\alpha = -qK_1\left\{F_1(k)z_r + F_2(k)\alpha_r + \left[F_3(k) - \frac{K_2}{K_1}F_4(k)\right]\Delta\alpha\right\} - qK_1F_5(k)w_t \tag{79}$$

EQUATIONS OF MOTION

Equations (76) and (79) are equations of motion inasmuch as they describe balances of aerodynamic, structural, and inertia forces. In fact, if the airplane fuselage were immobile ($\alpha_r = z_r = 0$), they would be sufficient to calculate all unknown quantities. However, if the fuselage is free to move, two additional equations are required to obtain the two additional unknown quantities α_r and z_r. These additional equations are those expressing the dynamic equilibrium of the forces on the fuselage, namely,

$$\left.\begin{aligned} L_w + L_t - m_f(\ddot{z}_r - \Delta x\,\ddot{\alpha}_r) &= 0 \\ M_w - x_t L_t - (r_f^2 + (\Delta x)^2)\, m_f\ddot{\alpha}_r + \Delta x\, m_f\ddot{z}_r &= 0 \end{aligned}\right\} \tag{80}$$

where the wing lift and pitching moment can be expressed in terms of the lift and moment distributions l and m as

$$\left.\begin{aligned} L_w &= \left\lfloor 2\frac{b}{2}[\mathrm{I}], [0] \right\rfloor \begin{Bmatrix} l \\ m_T \end{Bmatrix} \\ M_w &= \left\lfloor -2\left(\frac{b}{2}\right)^2 \tan\Lambda\,[\mathrm{II}],\ 2\frac{b}{2}[\mathrm{I}] \right\rfloor \begin{Bmatrix} l \\ m_T \end{Bmatrix} \end{aligned}\right\} \tag{81}$$

or

$$\left.\begin{aligned} L_w &= q\lfloor ⑪ \rfloor \begin{Bmatrix} z \\ \alpha \end{Bmatrix} + q\lfloor ⑬ \rfloor \{w\} \\ M_w &= q\lfloor ⑫ \rfloor \begin{Bmatrix} z \\ \alpha \end{Bmatrix} + q\lfloor ⑭ \rfloor \{w\} \end{aligned}\right\} \tag{82}$$

where $\lfloor ⑪ \rfloor$, $\lfloor ⑫ \rfloor$, $\lfloor ⑬ \rfloor$, and $\lfloor ⑭ \rfloor$ are the rows obtained by postmultiplying the rows of equation (81) by the square and rectangular matrices of equation (66). In equation (80) the fuselage lift and moment have been neglected; they can easily be expressed in terms of α_r and z_r and included, if desired.

The equations for the tail deformation $\Delta\alpha$ and those for the overall normal force and pitching moment can be combined with equation (76) as follows: For the sake of definiteness it will be assumed that n stations on the wing are considered, including the one at the root, so that there are $2n+1$ unknown quantities, and that in the column matrices defining applied loads, deformations, and so on, the values at the root of the wing are written at the top:

$$\begin{Bmatrix} z \\ \alpha \\ \Delta\alpha \end{Bmatrix} \equiv \begin{Bmatrix} z_{root} \\ \cdot \\ \cdot \\ \cdot \\ z_{tip} \\ \alpha_{root} \\ \cdot \\ \cdot \\ \cdot \\ \alpha_{tip} \\ \Delta\alpha \end{Bmatrix}$$

The first and $(n+1)$th equations of the system defined by equation (76) express only the trivial fact that the structural deformation at the wing root is zero. They are replaced by

equations (82) and (79), which are adjoined to the system, to yield the combined equation of motion

$$\left[\begin{array}{c:c:c} 0 & & \\ -1 & 1 & \\ -1 & 0 & 1 \\ -1 & 0 & 0 & 1 \\ \cdots & \cdots & \cdots & \cdots \\ \hdashline & 0 & & 0 \\ \hdashline 0 & -1 & 1 & \\ & -1 & 0 & 1 \\ & -1 & 0 & 0 & 1 \\ & \cdots & \cdots & \cdots & \cdots \\ \hdashline 0 & & 0 & 1 \end{array}\right] \left\{\begin{array}{c} z \\ \hdashline \alpha \\ \hdashline \Delta\alpha \end{array}\right\} = q \left[\begin{array}{c:c:c} \textcircled{1'} & \textcircled{2'} & \\ \hdashline \textcircled{3'} & \textcircled{4'} & \\ \hdashline & & \end{array}\right] \left\{\begin{array}{c} z \\ \hdashline \alpha \\ \hdashline \Delta\alpha \end{array}\right\} + q \left[\begin{array}{c:c:c} \textcircled{5'} & & \\ \hdashline \textcircled{6'} & & \\ \hdashline 0 & & \end{array}\right] \left\{\begin{array}{c} w \\ \hdashline w_t \end{array}\right\} \tag{83a}$$

If the square matrix on the right side of this equation is designated by $[A]$, the rectangular matrix by $[B]$, and the quasi-unit matrix on the left side of the equation by $[1']$, the equation can also be written as

$$\left[[1']-q[A]\right]\left\{\begin{array}{c} z \\ \alpha \\ \Delta\alpha \end{array}\right\} = q[B]\left\{\begin{array}{c} w \\ w_t \end{array}\right\} \tag{83b}$$

The matrices $[\textcircled{1'}]$ to $[\textcircled{6'}]$ are the same as the matrices $[\textcircled{1}]$ to $[\textcircled{6}]$ of equation (76), except that the first rows of the latter, which are all zero, are replaced as follows:

First row of—	Replacement	Quantity added to the leading element
①	First half of [⑪]	$F_1(k)+\dfrac{m_f}{\frac{\rho}{2}\left(\frac{c}{2}\right)^2}k^2$
②	Second half of [⑪]	$F_2(k)-\dfrac{m_f\Delta x}{\frac{\rho}{2}\left(\frac{c}{2}\right)^2}k^2$
③	First half of [⑫]	$-x_tF_1(k)-\dfrac{m_fx_t}{\frac{\rho}{2}\left(\frac{c}{2}\right)^2}k^2$
④	Second half of [⑫]	$-x_tF_2(k)+\dfrac{m_f[r_f^2+(\Delta x)^2]}{\frac{\rho}{2}\left(\frac{c}{2}\right)^2}k^2$
⑤	[⑫]	0
⑥	[⑩]	0

Also, the elements of the last rows and columns of the matrices $[A]$ and $[B]$ are zero, except for the following:

$$A_{1,2n+1}=F_3(k)-\frac{K_2}{K_1}F_4(k)$$

$$A_{n+1,2n+1}=-x_t\left[F_3(k)-\frac{K_2}{K_1}F_4(k)\right]$$

$$A_{2n+1,1}=-K_1F_1(k)$$

$$A_{2n+1,n+1}=-K_1F_2(k)$$

$$A_{2n+1,2n+1}=-K_1\left[F_3(k)-\frac{K_2}{K_1}F_4(k)\right]$$

$$B_{1,n+1}=F_5(k)$$

$$B_{n+1,n+1}=-x_tF_5(k)$$

$$B_{2n+1,n+1}=-K_1F_5(k)$$

SOLUTION OF THE EQUATIONS OF MOTION

For the purpose of calculating the desired transfer functions, equation (83b) may be solved directly for a given value of q as a set of linear algebraic equations with coefficients given by the matrix $[1']-q[A]$ and with "knowns" given by the column matrix $q[B]\left\{\begin{array}{c} w \\ w_t \end{array}\right\}$ (where $[A]$, $[B]$, and $\left\{\begin{array}{c} w \\ w_t \end{array}\right\}$ are functions of k). The result is a column matrix of the unknown amplitudes of the motions of the airplane. If this column is calculated for several values of k in the range of interest, these amplitudes, considered as functions of k, are transfer functions from the gust to the motions.

This column matrix can be substituted into equation (66) and the resulting column matrix $\left\{\begin{array}{c} l \\ m_T \end{array}\right\}$ substituted into equation (74), to yield a column matrix of bending and twisting moments which again, considered as a function of k, represents transfer functions from the gust to these moments. A set of transfer functions for the vertical shear could be calculated similarly from the relation

$$\{V\}=\left[\frac{b}{2}[1] \;\vdots\; [0]\right]\left\{\begin{array}{c} l \\ m_t \end{array}\right\}$$

The stress at any point of the structure can be assumed to be given by a linear superposition of the bending moment, twisting moment, and vertical shear at the given station, if elementary beam theory is used. If elementary beam theory cannot be used because of the interaction of bending and torsion stresses or because of shear lag, the stress at a given point can be expressed as a linear superposition of moments and shears at other stations as well as the given station. In either case, the transfer function for the given stress is then

produced by the same linear superposition of the transfer functions for the corresponding moments and shears.

It may be noted that, at zero frequency, solution of equation (83b) yields the static aeroelastic deformations and thus permits the calculation of the changes in the lift distribution and the shift of the aerodynamic center that result from static aeroelastic action. Also, inasmuch as this equation completely describes the dynamic behavior of the airplane, the speeds at which aeroelastic instability phenomena occur can be calculated from it, although such calculations are beyond the scope of this report. Suffice it to point out that for such a calculation the degrees of freedom of the body must be eliminated first, as a result of the way in which the problem has been set up. This elimination can be effected readily by considering the first and $(n+1)$th rows of $[A]$, but with A_{11}, $A_{1,n+1}$, $A_{n+1,1}$, and $A_{n+1,n+1}$ replaced by 0. If these rows are premultiplied by

$$-\begin{bmatrix} A_{11} & A_{1,n+1} \\ A_{n+1,1} & A_{n+1,n+1} \end{bmatrix}^{-1}$$

and used as the first and $(n+1)$th rows of a matrix which is otherwise a unit matrix, and if this resulting matrix is referred to as $[1'']$, then equation (83b) can be written for this homogeneous case as

$$[[1'][1'']-q[A][1'']]\begin{Bmatrix} z \\ \alpha \\ \Delta\alpha \end{Bmatrix}=\{0\}$$

The products $[1'][1'']$ and $[A][1'']$ will now have two null rows and columns each, which correspond to z_r and α_r. If these rows and columns are deleted and z_r and α_r are deleted in $\begin{Bmatrix} z \\ \alpha \\ \Delta\alpha \end{Bmatrix}$, yielding a column $\begin{Bmatrix} z \\ \alpha \\ \Delta\alpha \end{Bmatrix}'$, the remaining matrices are nonsingular, so that they can be inverted and the preceding equation can be written as

$$[[E]-q[D(k)]]\begin{Bmatrix} z \\ \alpha \\ \Delta\alpha \end{Bmatrix}'=\{0\} \tag{84}$$

where $[E]$ is the identity matrix, and

$$[D(k)]\equiv\left[\overbrace{[1']\,[1'']}\right]^{-1}\left[\overbrace{[A]\,[1'']}\right]$$

The horizontal braces designate the fact that the null rows and columns have been deleted.

Equation (84) is in the canonical form for the calculation of eigenvalues. If k is set equal to zero and the eigenvalues of $[D(0)]$ are calculated by iteration, expansion of the determinant, or any other suitable method, the lowest real and positive one represents the value of the dynamic pressure at divergence. For swept wings the value lowest in absolute magnitude is usually negative and is therefore of no practical significance, although it is often used as an index of the aeroelastic behavior of the airplane.

This calculation can be repeated for various positive values of k, the first few eigenvalues being obtained for each. The results, which will generally be complex, can be plotted against k. When any of the eigenvalues becomes purely real, it represents a dynamic pressure at flutter, and the corresponding value of k represents the reduced frequency at flutter. (This statement is true only if the structural damping is zero; such damping effects can easily be included, but the details of the process are beyond the scope of this report.)

DYNAMICS OF THE LARGE FLEXIBLE AIRPLANE

For the large flexible airplane the fundamental proposition of power spectral analysis, that the output power spectrum of a system is the product of the absolute square of the transfer function and the input power spectrum, is no longer valid if the input is considered to be the gust intensity at a point. Nor can the output power spectrum be expressed directly in terms of an effective input spectrum, as in the case of the rigid airplane, where this simplification resulted from the assumption that the indicial-response function was expressible as the product of a function of time alone and a function of distance along the span alone.

In the first section of this part of the report the statistical problems involved in an analysis of the response of a large flexible airplane are considered. The nature of the generalized transfer functions required for this purpose is described, and the means whereby they are combined with the input spectrum are indicated.

The second section is concerned with an extension of the method outlined in the preceding part to the case of the large airplane. Although fundamentally the dynamic aspects of the problem are unchanged, and although the longitudinal and lateral degrees of freedom can still be separated, a direct application of the approaches outlined in the preceding parts of the report to the large airplane requires consideration of the entire wing, rather than only one half of the wing. Little additional computing time is then required to treat the lateral and longitudinal degrees of freedom simultaneously, and the necessity of combining the results of two separate analyses is obviated. However, attention can still be confined to one half of the wing by using the technique outlined in the discussion following equation (55) and in the section headed "Combination of the Results Obtained From Analyses of the Longitudinal and Lateral Degrees of Freedom." Basically this technique consists in splitting the influence functions of concern into symmetric and antisymmetric parts and using one part for an analysis involving the longitudinal degrees, and the other in an analysis involving the lateral degrees. If this approach is adopted, separate analysis of longitudinal and lateral degrees of freedom is still preferable.

EXTENSION OF THE STATISTICAL APPROACH

The power spectrum and, hence, the mean-square values of the responses such as the stress at a given point on the wing of a large flexible airplane due to flight through turbulent air can be calculated in several ways. Perhaps the most direct of these consists in using the basic approach outlined in the first part of this paper and starting with an expression

for the instantaneous value of the stress in terms of a suitable indicial-response influence function, namely,

$$\sigma(t)=\int_{-\infty}^{\infty}\int_{-b/2}^{b/2} h_\sigma^w(t_1,y)\,w(U(t-t_1),y)\,dy\,dt_1 \tag{85}$$

The function $h_\sigma^w(t,y)$ is, as before, an indicial-response influence function or Green's function for the partial differential equation. It relates the stress as a function of space and time coordinates to the applied loads, which are also functions of space and time coordinates. The essential difference between the problem considered in this section and those treated in the first two parts of the report is that this function can no longer be expressed as a product of a function of t alone and y alone. In some cases—in a modal approach, for instance—it may be expressible as a sum of several such functions, and then the approach used previously for the bending moment of a large rigid airplane free to move vertically may be adopted, as has been done in reference 13. However, in this section the case is considered in which even this simplification cannot be made.

The correlation function for σ can be calculated directly from equation (85), and for the case of axisymmetric turbulence it is

$$\psi_\sigma(\tau)=\int_{-\infty}^{\infty}\int_{-\infty}^{\infty}\int_{-b/2}^{b/2}\int_{-b/2}^{b/2} h_\sigma^w(t_1,y_1)h_\sigma^w(t_2,y_2)\,\psi_w\left(\sqrt{U^2(\tau+t_1-t_2)^2+(y_2-y_1)^2}\right)dy_1\,dy_2\,dt_1\,dt_2 \tag{86}$$

Hence, the power spectrum of σ can be obtained by calculating the Fourier transform of this function and is

$$\varphi_\sigma(\omega)=\int_{-b/2}^{b/2}\int_{-b/2}^{b/2} H_\sigma^{w*}(\omega,y_1)H_\sigma^w(\omega,y_2)\,\tilde{\varphi}_w(\omega,|y_2-y_1|)\,dy_1\,dy_2 \tag{87}$$

where $\tilde{\varphi}_w(\omega,\eta)$ is the two-dimensional spectrum considered previously, $H_\sigma^w(\omega,y)$ is the Fourier transform of $h_\sigma^w(t,y)$ with respect to time, and the asterisk designates a complex conjugate, as before. Thus, the function $H_\sigma^w(\omega,y)$ is a transfer function from sinusoidal vertical gusts (of width dy) impinging on the wing at a given station y on the wing to the stress σ, or a Green's function for the ordinary differential equation (with the quantity ω as a parameter) that relates the stress amplitude as a function of the space coordinate y to the amplitude of the applied sinusoidal gusts.

The term $H_\sigma^{w*}(\omega,y_1)\,H_\sigma^w(\omega,y_2)$ in equation (87) is complex; however, the imaginary part can be ignored because it contributes nothing to the integral as a result of the fact that $\tilde{\varphi}_w$ depends only on $|y_2-y_1|$.

In a manner analogous to the one employed in the first part of this report, the double integral in equation (87) can be evaluated by introducing the function $\tilde{H}_\sigma^w(\omega,\eta)$ which takes the place of the function $\Gamma(\eta)$ used previously and is defined by an autoconvolution of $H_\sigma^w(\omega,\eta)$:

$$\tilde{H}_\sigma^w(\omega,\eta)=2\int_{-b/2}^{b/2}\mathrm{R}\{H_\sigma^{w*}(\omega,y)\,H_\sigma^w(\omega,y+\eta)\}\,dy$$

where R{ } designates the real part. Hence,

$$\varphi_\sigma(\omega)=\int_0^b \tilde{H}_\sigma^w(\omega,\eta)\,\tilde{\varphi}_w(\omega,\eta)\,d\eta \tag{88}$$

Another approach consists in using the double Fourier transform $\Phi_w(\lambda)$ of the axisymmetric input correlation defined in the first part of this report. In terms of this function the correlation function $\psi_\sigma(\tau)$ can be written as

$$\begin{aligned}\psi_\sigma(\tau)&=\frac{1}{4}\int_{-\infty}^{\infty}\int_{-\infty}^{\infty}\int_{-b/2}^{b/2}\int_{-b/2}^{b/2}\int_{-\infty}^{\infty}\int_{-\infty}^{\infty} h_\sigma^w(t_1,y_1)h_\sigma^w(t_2,y_2)\,e^{i[\lambda_1 U(\tau+t_1-t_2)+\lambda_2(y_2-y_1)]}\Phi_w\left(\sqrt{\lambda_1^2+\lambda_2^2}\right)d\lambda_1 d\lambda_2 dy_1 dy_2 dt_1 dt_2\\&=\frac{1}{4}\int_{-\infty}^{\infty}\int_{-\infty}^{\infty} e^{i\lambda_1 U\tau}\left|\hat{H}_\sigma^w(\lambda_1,\lambda_2)\right|^2\Phi_w\left(\sqrt{\lambda_1^2+\lambda_2^2}\right)d\lambda_1 d\lambda_2\end{aligned}$$

where the function

$$\hat{H}_\sigma^w(\lambda_1,\lambda_2)=\int_{-\infty}^{\infty}\int_{-b/2}^{b/2} h_\sigma^w(t,y)\,e^{-i(\lambda_1 Ut+\lambda_2 y)}\,dy\,dt$$

represents the Fourier transform (with respect to y) of the function $H_\sigma^w(\omega,y)$, that is,

$$\hat{H}_\sigma^w(\lambda_1,\lambda_2)=\int_{-b/2}^{b/2} e^{-i\lambda_2 y}H_\sigma^w(\lambda_1 U,y)\,dy \tag{89}$$

Hence,

$$\varphi_\sigma(\omega)=\frac{1}{4\pi}\int_{-\infty}^{\infty}\int_{-\infty}^{\infty}\int_{-\infty}^{\infty}e^{i\lambda_1 U\tau}e^{-i\omega\tau}\left|\hat{H}_\sigma^w(\lambda_1,\lambda_2)\right|^2\Phi_w\left(\sqrt{\lambda_1^2+\lambda_2^2}\right)d\lambda_1 d\lambda_2\, d\tau$$

$$=\frac{1}{2U}\int_{-\infty}^{\infty}\left|\hat{H}_\sigma^w\left(\frac{\omega}{U},\lambda\right)\right|^2\Phi_w\left(\sqrt{\left(\frac{\omega}{U}\right)^2+\lambda^2}\right)d\lambda \tag{90}$$

With the approach outlined in the next section, the function $H_\sigma^w(\omega,y)$ can be calculated either directly or indirectly, by first calculating the transfer function from the gust to the lift distribution and then the transfer function from the lift distribution to the stress. For the indirect method,

$$H_\sigma^w(\omega,y)=\int_{-b/2}^{b/2}H_\sigma^l(\omega,y)H_l^w(\omega)\,G(\eta,y)d\eta$$

where the function $H_l^w(\omega)\ G(\eta,y)$ is the influence function for the local lift or the Green's function for the aerodynamic problem involving sinusoidal gusts considered in the first part of this report; the symbols η and y in $G(\eta,y)$ are interchanged, however, so that the function now defines the contribution of a gust at station y to the lift at station η. The transfer function $H_\sigma^l(\omega,\eta)$ relates the (sinusoidal) stress at the given point to a unit concentrated (sinusoidal) normal force acting at station η.

With this indirect method, the power spectrum for the stress at a given point can be calculated by starting with the power spectrum for the lift distribution calculated in the first part of the report. For this approach $\sigma(t)$ may be written as

$$\sigma(t)=\int_{-\infty}^{\infty}\int_{-b/2}^{b/2}h_\sigma^l(t_1,y)\,l(t-t_1,y)dy\,dt_1$$

so that

$$\psi_\sigma(\tau)=\int_{-\infty}^{\infty}\int_{-\infty}^{\infty}\int_{-b/2}^{b/2}\int_{-b/2}^{b/2}h_\sigma^l(t_1,y_1)h_\sigma^l(t_2,y_2)\psi_l(\tau+t_1-t_2,y_1,y_2)dy_1dy_2dt_1dt_2$$

and

$$\varphi_\sigma(\omega)=\int_{-b/2}^{b/2}\int_{-b/2}^{b/2}H_\sigma^{l*}(\omega,y_1)H_\sigma^l(\omega,y_2)\varphi_l(\omega,y_1,y_2)dy_1\,dy_2 \tag{91}$$

where

$$\psi_l(\tau,y_1,y_2)\equiv\overline{l(t,y_1)l(\tau+t,y_2)}$$

The Fourier transform of this correlation function is, then,

$$\varphi_l(\omega,y_1,y_2)=|H_l^w(\omega)|^2\varphi_{w_e}(\omega) \tag{92}$$

(See the section headed "Generalized Aerodynamic Influence Functions in Unsteady Flow.") Hence,

$$\varphi_\sigma(\omega)=|H_l(\omega)|^2\int_{-b/2}^{b/2}\int_{-b/2}^{b/2}H_\sigma^{l*}(\omega,y_1)H_\sigma^l(\omega,y_2)\varphi_{w_e}(\omega)dy_1dy_2 \tag{93}$$

If $\varphi_{w_e}(\omega)$ is given by equation (35), the double integral can be expressed in terms of single integrals as follows:

$$\varphi_\sigma(\omega)=|H_l^w(\omega)|^2\left[(1-K)^2|G(\omega)|^2\varphi_{w_e}(\omega)+2K(1-K)\mathrm{R}\{G(\omega)G'^*(\omega)\}+K^2\int_0^b G''(\omega,\eta)\varphi_w(\omega,\eta)d\eta\right] \tag{94}$$

where

$$G(\omega)\equiv\int_{-b/2}^{b/2}H_\sigma^l(\omega,y)\gamma(y)\,dy$$

$$G'(\omega)\equiv\int_{-b/2}^{b/2}H_\sigma^l(\omega,y)\varphi_{w_e^*}(\omega,y)\gamma(y)dy$$

$$G''(\omega,\eta)\equiv 2\int_{-b/2}^{(b/2)-\eta}[\mathrm{R}\{H_\sigma^l(\omega,y)\}\mathrm{R}\{H_\sigma^l(\omega,y+\eta)\}+\mathrm{I}\{H_\sigma^l(\omega,y)\}\mathrm{I}\{H_\sigma^l(\omega,y+\eta)\}]\gamma(y)\gamma(y+\eta)dy$$

as before, R{ } designates the real part, and I{ } designates the imaginary part.

Equations (88), (90), and (93) thus represent three methods of obtaining the power spectrum of the given stress. One requires a transfer function from the local gust intensities directly to the stress, an autoconvolution of this transfer function, and the spectrum of turbulence defined by equation (16); the second requires a two-dimensional spectrum of the turbulence defined by equations (17a) and (17b) and a Fourier transform of the aforementioned transfer function with respect to y; the third utilizes an autoconvolution of the transfer functions from local concentrated loads to the stress and the spectrum for local lifts due to vertical gusts calculated in the first part of the report. The choice of approach depends to some extent on the information available, but is largely a matter of individual preference.

The analysis in this section has been based on the premise that both halves of the wing would be treated simultaneously. Attention can be confined to one wing by using only the symmetric parts of the influence functions in an analysis involving the longitudinal degrees of freedom, and only the antisymmetric parts in an analysis involving the lateral degrees of freedom. The symmetric part of an influence function for a unit concentrated load or gust acting at station y is the response function for two loads or gusts of ½ unit intensity acting at stations y and $-y$, respectively. Similarly, the antisymmetric part is the response for a load or gust of ½ unit intensity acting at station y and an equal and opposite load or gust acting at station $-y$. If this approach is chosen, some of the integral expressions given in this section assume slightly simpler forms. For instance, equation (89) can then be written for the symmetric part as

$$\hat{H}_\sigma^w(\lambda_1,\lambda_2)=2\int_0^{b/2}\cos\lambda_2 y H_\sigma^w(\lambda_1 U,y)dy$$

and for the antisymmetric part as

$$\hat{H}_\sigma^w(\lambda_1,\lambda_2)=-2i\int_0^{b/2}\sin\lambda_2 y H_\sigma^w(\lambda_1 U,y)dy$$

CALCULATION OF THE REQUIRED TRANSFER FUNCTIONS

Depending on which of the methods outlined in the preceding section is used, one of two types of transfer functions is required—either the one from local gusts to the stress of interest, or the one from the local lift to that stress. Both of these functions differ in several respects from those considered in the preceding part of this report.

For either type of transfer function the structural deformations of the wing under concentrated loads as well as under distributed loads will be required, so that the numerical-integration schemes used in the preceding part have to be modified to some extent. Also, it may now be preferable to consider the entire wing (rather than the one semispan considered in the case of the small flexible airplane), so that the various transfer functions are asymmetric. With the degrees of freedom considered in the analysis thus doubled, it becomes preferable to include one additional degree of freedom, roll, rather than to perform two separate analyses for symmetric and antisymmetric motions with, respectively, one and two less degrees of freedom, and then to combine the results. However, if the alternative approach of splitting up the influence functions into symmetric and antisymmetric parts for use in two separate analyses is adopted, only one semispan need be considered, and the results presented in this section can then be simplified to a large extent.

Before discussing the modifications required to extend the dynamic analysis outlined in the preceding part of the report to the large airplane, it might be pointed out that chordwise deformations (deformations parallel to the chord) will again be ignored. Again, they can readily be included by a straightforward extension of the approach used here if it is felt that they may be significant in any given case. If they are included, however, yawing and possibly also sideslipping motions can probably no longer be ignored, because they may give rise to large forces in the chordwise direction. If the entire wing is treated, these two additional degrees of freedom can readily be included, and all longitudinal and lateral degrees of freedom are then treated simultaneously; if two separate analyses are performed for the longitudinal and lateral degrees of freedom, the symmetric and antisymmetric parts of the influence functions being used and only one semispan being treated, these additional degrees of freedom enter only into the lateral analysis.

The structural deformation due to local (concentrated) loads can be obtained in several ways. If measured influence coefficients are used, they pertain precisely to such loads and, in fact, must be modified before they can be used for distributed loads (see ref. 12) so that it is necessary only to use the unmodified coefficients.

If the deformations are to be calculated in a manner similar to that employed in the preceding part, the integrating matrices must be replaced as follows:

$$\frac{b}{2}[\mathrm{I}] \text{ by } \frac{b}{2}[\mathrm{I}']$$

where

$$\mathrm{I}_{pq}'=1 \qquad (q>p)$$

$$\mathrm{I}_{pq}'=\frac{1}{2} \qquad (q=p)$$

$$\mathrm{I}_{pq}'=0 \qquad (q<p)$$

and

$$\left(\frac{b}{2}\right)^2[\mathrm{II}] \text{ by } \frac{b}{2}[\mathrm{II}']$$

where

$$\mathrm{II}_{pq}'=y_q-y_p \qquad (q\geqq p)$$

$$\mathrm{II}_{pq}'=0 \qquad (q<p)$$

The factor of ½ for I_{pp}' constitutes an approximation which implies fairing through a discontinuity. If this approximation is to be avoided, the deflections due to unit concentrated loads (the structural influence coefficients) can be calculated directly from simple beam theory, in which case the limits of integration take care of the discontinuities. Thus, for instance, for an unswept wing, the normal deflection and twist at y_p due to a unit concentrated load and torque, respectively, at y_q are

$$z_{pq}=\int_0^{y_p}\int_0^{y'}\frac{y_q-y}{EI(y)}dy\,dy' \qquad (y_p \leqq y_q)$$

$$z_{pq}=\int_0^{y_q}\int_0^{y'}\frac{y_q-y}{EI(y)}dy\,dy'+(y_p-y_q)\int_0^{y_q}\frac{y_q-y}{EI(y)}dy \qquad (y_p > y_q)$$

$$\alpha_{pq}=\int_0^{y_p}\frac{1}{GJ(y)}dy \qquad (y_p \leqq y_q)$$

$$\alpha_{pq}=\int_0^{y_q}\frac{1}{GJ(y)}dy \qquad (y_q < y_p)$$

The concentrated loads under consideration arise as follows: For the transfer functions relating local lifts to the desired stress, the local lifts may be considered to be concentrated loads of unit magnitude, associated with concentrated torques of magnitude e_1c. Equation (83b) can then be written as (see also eq. (76))

$$\Big[[1']-q[A]\Big]\begin{bmatrix} z \\ \alpha \\ \Delta\alpha \end{bmatrix}=[R']\begin{bmatrix} \lfloor w\rfloor \\ \hline \lfloor e_1c\rfloor\lfloor w\rfloor \end{bmatrix} \qquad (95)$$

where $\lfloor w\rfloor$ is a diagonal matrix of the values of w defined by equation (63), and where the matrix $[R']$ represents either the four influence-coefficient matrices for z and α due to concentrated loads and torques, or the square matrix of equation (75) with modified integrating matrices, as discussed in the preceding paragraphs.

It may be noted that equation (95) now represents not one set of simultaneous equations but several, all having the same coefficients but different sets of knowns (as defined by the columns of the matrix on the right side) and, hence, different sets of unknowns $\left(\text{the columns of the matrix } \begin{bmatrix} z \\ \alpha \\ \Delta\alpha \end{bmatrix}\right)$. This situation is due to the fact that the functions under consideration are, in effect, the responses of the airplane as a whole to sinusoidally varying concentrated loads and are different for each location of the applied load.

Once this equation has been modified to take into account the overall body motions and tail deflections (as explained in the preceding part) as well as the rolling motions (as explained in the following paragraphs), it can be solved to yield the unknown values of $\begin{bmatrix} z \\ \alpha \\ \Delta\alpha \end{bmatrix}$. From these values the bending and twisting moments, as well as the vertical shears, can be calculated and added to those due to the concentrated loads. When combined linearly as required for the desired stress, these moments and shears yield the desired transfer functions $H_\sigma^l(\omega, y)$.

If the transfer function directly from the local gusts to the desired stress is to be determined, the response of the airplane to the lift distribution induced by a sinusoidal gust of width dy acting at station y must be calculated. This lift distribution is the Green's function considered previously. If it is represented by the relation $H_l^w(\omega)\ G(y,\eta)$, with $G(y,\eta)$ defined by the approximation given in equation (34), the concentrated loads arise from the delta function in that expression. The right side of equation (95) becomes, in that case,

$$q\,(1-K)\,H_l^w(\omega)\,[R]\left[\frac{[\gamma(y)\,\gamma(\eta)]}{\lfloor e_1c\rfloor[\gamma(y)\,\gamma(\eta)]}\right]\lfloor w\rfloor+$$

$$qbK\,H_l^w(\omega)\,[R']\left[\frac{\lfloor\gamma(y)\rfloor\lfloor w\rfloor}{\lfloor e_1c\rfloor\lfloor\gamma(y)\rfloor\lfloor w\rfloor}\right]$$

where $[R]$ represents the square matrix of equation (75), and $[R']$ the one discussed in connection with equation (95). Again, several sets of simultaneous equations are implied. Their solution (after modification for overall motions and tail deflections) yields values of z and α from which the transfer functions $H_\sigma^w(\omega,y)$ can be calculated.

The extension of the method of the preceding part to the calculation of the deformations on both wings is straightforward. Essentially, distributed lifts and torques now have to be calculated for both wings and integrated with matrices which can be assembled from those used for one wing alone. No new problems arise in this process, so that it need not be discussed further.

The inclusion of rolling motion, however, is not so straightforward. One method consists in replacing all values of z in equation (83a) or its equivalent by $z+\Theta y$ and then reducing the columns involving this quantity by the following relation (which assumes that the new unknown quantity, the roll angle Θ, is listed at the end of the column):

$$\left\{\begin{array}{c} z+\Theta y \\ \hline \alpha \\ \hline \Delta\alpha \\ \Theta \end{array}\right\}=\left[\begin{array}{ccccc|ccccc|c|c} 1 & & & & & & & & & & & \\ & 1 & & & & & & & & & & \\ & & 1 & & & & & & & & & \\ & & & 1 & & & & 0 & & & 0 & \{y\} \\ & & & & \ddots & & & & & & & \\ \hline & & & & & 1 & & & & & & \\ & & & & & & 1 & & & & & \\ & & & & & & & 1 & & & & \\ & & 0 & & & & & & 1 & & 0 & \\ & & & & & & & & & \ddots & & \\ \hline & & & & & & & & & & 1 & \\ & & 0 & & & & & 0 & & & & 1 \end{array}\right]\left\{\begin{array}{c} z \\ \hline \alpha \\ \hline \Delta\alpha \\ \Theta \end{array}\right\}$$

An additional equation must then be joined to the set, namely, the equation of equilibrium in roll

$$\int_{-b/2}^{b/2} l(y)\, y\, dy - I_x\ddot{\Theta} - M_{D_t}\ddot{\Theta} = 0 \tag{96}$$

where I_x is the inertia in roll of the fuselage and empennage alone inasmuch as the inertia effects of the wing are included in $l(y)$, and M_{D_t} is the coefficient of damping in roll for the empennage. For most cases both of these contributions are negligible. If they are ignored, equation (96) can be written in matrix notation as

$$[\Pi]\{l\}=0$$

where $[\Pi]$ is now a matrix which serves to perform the integration required in equation (96). This condition can then be adjoined to the other equations of the set in the same manner as equations (82) were adjoined to the set in the preceding part.

The result, again, is a set of simultaneous equations for z, α, $\Delta\alpha$, and Θ from the solution of which the desired transfer functions can be obtained as outlined in the preceding paragraphs. Also, as before, once the unknowns z_r, α_r, and Θ are eliminated from the set, the divergence and flutter speeds can be calculated by conventional matrix operations; these speeds will then pertain to an airplane free to move vertically as well as in pitch and roll and, hence, will include divergence and flutter speeds in antisymmetric as well as symmetric modes.

DISCUSSION

SOME IMPLICATIONS OF THE ASSUMPTIONS CONCERNING THE NATURE OF ATMOSPHERIC TURBULENCE

The turbulence was assumed to be homogeneous in order to make the problem stationary in the statistical sense and thus permit the use of the mathematical techniques developed for such problems. In a practical sense, turbulence can be homogeneous only in a limited body of air. The assumption thus implies that the dimension of this body of air along the flight path is large compared with the distance traversed in the reaction time of the airplane, which in the case of load studies is of the order of the time to damp to one-half amplitude, but in the case of motion studies may be much larger. Obviously, the greater the body of air, the greater the reliability with which the loads and motions can be predicted (in a statistical sense) for one run through it. In general, turbulence at very low altitudes, which may be influenced significantly by the configuration of the ground, and turbulence in thunderstorms may not be sufficiently homogeneous for the purpose of this type of analysis, but other types of turbulence are likely to be substantially homogeneous over sufficiently large distances.

Isotropy was assumed in order to permit the required two-dimensional correlation functions to be expressed simply in terms of the one-dimensional correlation functions. For sufficiently short wave lengths all turbulence is isotropic, but for long wave lengths it can be isotropic only if it is homogeneous (both in the plane of the flight path and perpendicular to it). The condition of axisymmetry, which is sufficient for most of the results presented herein, is less restrictive than isotropy inasmuch as it does not specify the variation of the characteristics of the turbulence in the vertical direction. In practical problems, if the turbulence may be assumed to be homogeneous, the conditions of axisymmetry and isotropy are likely to be satisfied to a sufficient extent to permit the use of the approach presented herein for all but very long wave lengths. The wave length at which it ceases to be valid depends on the size of the body of air under consideration, being larger for a large body.

Taylor's hypothesis (to the effect that a space displacement Δx along the flight path may be identified with a time displacement $\tau=\Delta x/U$ in the gust correlation functions) implies that the variation in gust intensity that prevails along the flight path at any instant will remain substantially the same until the airplane has traversed the given body of air. The required correlation functions for atmospheric turbulence are thus in the nature of space correlation functions (rather than time correlation functions) and have been considered as such. The statistical characteristics of the turbulence are then independent of the speed at which it is traversed. Clearly, whether or not this hypothesis is valid depends on the flying speed of the airplane. On the basis of present knowledge no definite lower limiting speed can be quoted. However, indications are that the hypothesis is valid for flying speeds greater than about 100 or 200 feet per second. The effect of finite flying speed on the gust correlation function can be expected to be most pronounced for large distances, where the correlation is weak, so that the effect on the various spectra is likely to be small and to occur at the longest wave lengths, where, as previously mentioned, the spectrum is somewhat uncertain for other reasons as well; this effect is thus more likely to be significant for large than for small airplanes.

The particular correlation function used herein for the calculations of the "averaged" correlation functions and spectra has certain theoretical shortcomings—primarily that the associated spectrum does not decrease rapidly enough for very short wave lengths. However, it does appear to be adequate to represent the available information concerning the spectra of atmospheric turbulence (see ref. 17, for instance) because the behavior at very short wave lengths is relatively unimportant, inasmuch as airplanes cannot respond to them, and the behavior at very long wave lengths is usually in doubt by reason of the nonhomogeneity of actual turbulence. In the intermediate range of wave lengths, this correlation function appears to be quite satisfactory.

The parameter L^* (the integral scale of turbulence) used herein is, for practical purposes, a largely fictitious quantity, inasmuch as it is proportional to the values of the gust spectrum for infinite wave lengths, which, in view of the uncertainties in the values of the spectra at large wave lengths, have little physical significance. Therefore, at present, insufficient information is available to give a value for L^* to be used in connection with the numerical results calculated herein, although a value of 1,000 to 2,000 feet appears to be appropriate. As more information concerning the spectrum of atmospheric turbulence becomes avail-

able, more definite values can be deduced by fitting an analytical expression of the type used here to measured results in the range of frequencies of primary interest, and then using this expression as a means of obtaining a value of L^* by extrapolation of the measured results to infinite wave lengths (zero frequency).

CONSIDERATIONS PERTINENT TO THE APPLICATION OF STATIONARY-RANDOM-PROCESS TECHNIQUES TO GUST-LOAD PROBLEMS

The purpose of this section is to point out how, in principle, the results of analyses of the type outlined herein may be used in overall load analysis and, hence, in the design of an airplane.

Consideration is confined in this paper primarily to the power spectra of the motions and stresses of interest. As pointed out in references 1, 2, 3, and 11, for instance, a great deal of statistical information of direct interest can be obtained from the power spectrum. For instance, if the random process of concern (say, the given stress as a function of time) has a Gaussian probability distribution, the expected number of peaks at or beyond a given level in a given period of time can be calculated very simply from the integral of the spectrum and its second and fourth moments.

The results obtained in this manner pertain to continued flight in a given body of turbulent air. They have to be generalized by determining the likelihood of flying through turbulence of the given characteristics. (See ref. 18.) The probability of exceeding a given stress level during the expected life of the airplane while flying through atmospheric turbulence can thus be calculated in straightforward fashion. To this probability must then be added the probability of exceeding this level in maneuvers, landings, and, possibly, also in turbulence due to thunderstorms, because in view of the possibly nonhomogeneous character of turbulence in thunderstorms and the possibly nonlinear nature of the aerodynamic forces incurred while flying through them, the techniques used herein may not be applicable to flight through thunderstorms, and a separate analysis may have to be performed.

Although the available information concerning atmospheric turbulence is inadequate to permit of any definite conclusion, the results obtainable with the approach outlined herein may turn out to be most significant for the prediction of the low- and medium-amplitude stress cycles which are important to fatigue studies; their validity for or contribution to the prediction of very severe loads remains to be seen.

CONCLUDING REMARKS

The statistical approach to the problem of calculating the dynamic responses and the stresses of an airplane subjected to continuous random atmospheric turbulence has been extended in several respects; basically, only the assumptions of linearity, that is, of small motions and deformations, as well as homogeneity and axisymmetry of the turbulence are retained.

The first problem considered was the effect of spanwise variations of the instantaneous turbulent velocities on the lift and moments due to turbulence. The mean-square lift has been shown to be reduced considerably if the span of the airplane is relatively large compared with the integral scale of turbulence. The shape of the spectrum of this lift is affected relatively little by spanwise variations of gust intensity, except at very high frequencies, if the decrease in the effective mean-square intensity is taken into account. The effect of sweep on the mean-square lift and its spectrum has been shown to be small for wings with a given distance from root to tip.

If the variation of the instantaneous velocities is taken into account, the rolling moment to which the airplane is subjected can be calculated. The mean-square rolling moment has been shown to be proportional to the ratio of the wing span to the integral scale of turbulence for small values of that ratio. Similarly, expressions for the mean-square values and the power spectra of the local lift, the bending moments, and the pitching moment have been given. For some of these forces the required aerodynamic information cannot be calculated by existing methods. Therefore, certain approximations, based on experience with steady aerodynamic forces and available knowledge concerning unsteady forces, had to be made for the aerodynamic influence functions in unsteady flow.

The next problem considered was the dynamic response of a rigid airplane to random turbulence. This problem had previously been treated for the case of an airplane free to move only in the vertical direction and small enough so that variation of the turbulent velocities along the span could be neglected. In the present report the response of an airplane in three longitudinal degrees of freedom was considered; calculations were made which suggest that the inclusion of deviations from the mean horizontal motion is superfluous in gust-load calculations. For the remaining two longitudinal degrees of freedom, the mean-square normal and angular acceleration have been shown to be functions of only two parameters other than the mass ratio and scale parameter of the single-degree-of-freedom case, namely, dimensionless forms of the short-period frequency and of the time to damp to one-half amplitude. An indication is given of the manner in which the results obtained in connection with the first problem can be used to extend this dynamic analysis to the case in which variations of the turbulent velocity along the span have to be taken into account.

The last problem treated was the dynamic response of a flexible airplane, including vertical motion, pitch, and, when necessary (as when spanwise variations in gust intensity are taken into account), roll. Horizontal and lateral (yawing and sideslipping) motions were disregarded because they do not generally affect the wing stresses due to vertical gusts. A method which represents an extension to the dynamic case of a numerical-integration approach to the static aeroelastic problem has been outlined for the analysis of the problem at hand. The modifications required in the basic statistical approach and in this method of dynamic analysis in order to treat the case in which spanwise variations of the gust intensity are important have been discussed.

Although most of this analysis has been confined to the vertical component of turbulence, it has been shown that the simultaneous action of longitudinal, vertical, and lateral

gusts on the wing stresses (with due allowance for the fact that vertical gusts affect both the longitudinal and the lateral motions of the airplane) can be taken into account by simply adding the power spectra of the various contributions, provided the turbulence is isotropic; the cross correlations or spectra have been shown to vanish either by the symmetry or antisymmetry of the influence functions involved or as a result of the statistical independence of mutually perpendicular velocity components.

The approach presented herein thus furnishes a foundation for the prediction of the statistical properties of the stress experience of a given airplane once the appropriate statistical characteristics of the atmosphere have been determined.

LANGLEY AERONAUTICAL LABORATORY,
NATIONAL ADVISORY COMMITTEE FOR AERONAUTICS,
LANGLEY FIELD, VA., *November 5, 1956.*

REFERENCES

1. Liepmann, H. W.: An Approach to the Buffeting Problem From Turbulence Considerations. Rep. No. SM-13940, Douglas Aircraft Co., Inc., Mar. 13, 1951.
2. Fung, Y. C.: Statistical Aspects of Dynamic Loads. Jour. Aero. Sci., vol. 20, no. 5, May 1953, pp. 317–330.
3. Press, Harry, and Mazelsky, Bernard: A Study of the Application of Power-Spectral Methods of Generalized Harmonic Analysis to Gust Loads on Airplanes. NACA Rep. 1172, 1954. (Supersedes NACA TN 2853.)
4. Clementson, Gerhardt C.: An Investigation of the Power Spectral Density of Atmospheric Turbulence. Ph. D. Thesis, M.I.T., 1950.
5. Liepmann, H. W.: Extension of the Statistical Approach to Buffeting and Gust Response of Wings of Finite Span. Jour. Aero. Sci., vol. 22, no. 3, Mar. 1955, pp. 197–200.
6. Heaslet, Max A., and Spreiter, John R.: Reciprocity Relations in Aerodynamics. NACA Rep. 1119, 1953. (Supersedes NACA TN 2700.)
7. Reissner, Eric, and Stevens, John E.: Effect of Finite Span on the Airload Distributions for Oscillating Wings. II—Methods of Calculation and Examples of Application. NACA TN 1195, 1947.
8. Drischler, Joseph A.: Calculation and Compilation of the Unsteady-Lift Functions for a Rigid Wing Subjected to Sinusoidal Gusts and to Sinusoidal Sinking Oscillations. NACA TN 3748, 1956.
9. Diederich, Franklin W.: A Simple Approximate Method for Calculating Spanwise Lift Distributions and Aerodynamic Influence Coefficients at Subsonic Speeds. NACA TN 2751, 1952.
10. Diederich, Franklin W., and Zlotnick, Martin: Calculated Spanwise Lift Distributions, Influence Functions, and Influence Coefficients for Unswept Wings in Subsonic Flow. NACA Rep. 1228, 1955. (Supersedes NACA TN 3014.)
11. Anon.: Fundamentals of Design of Piloted Aircraft Flight Control Systems. Vol. II—Dynamics of the Airframe. Rep. AE-61-4, Bur. Aero., Feb. 1953.
12. Phillips, William H., and Kraft, Christopher C., Jr.: Theoretical Study of Some Methods for Increasing the Smoothness of Flight Through Rough Air. NACA TN 2416, 1951.
13. Diederich, Franklin W.: The Dynamic Response of a Large Airplane to Continuous Random Atmospheric Disturbances. Jour. Aero. Sci., vol. 23, no. 10, Oct. 1956, pp. 917–930.
14. Diederich, Franklin W.: Calculations of the Aerodynamic Loading of Swept and Unswept Flexible Wings of Arbitrary Stiffness. NACA Rep. 1000, 1950.
15. Theodorsen, Theodore: General Theory of Aerodynamic Instability and the Mechanism of Flutter. NACA Rep. 496, 1935.
16. Jones, Robert T., and Fehlner, Leo F.: Transient Effects of the Wing Wake on the Horizontal Tail. NACA TN 771, 1940.
17. Crane, Harold L., and Chilton, Robert G.: Measurements of Atmospheric Turbulence Over a Wide Range of Wavelength for One Meteorological Condition. NACA TN 3702, 1956.
18. Press, Harry, Meadows, May T., and Hadlock, Ivan: Estimates of Probability Distribution of Root-Mean-Square Gust Velocity of Atmospheric Turbulence From Operational Gust-Load Data by Random-Process Theory. NACA TN 3362, 1955.