24 JUL 1958

NACA RM E58D11

TECH LIBRARY KAFB, NM
0143888

NACA

RESEARCH MEMORANDUM

7051

COMPATIBILITY OF METALS WITH LIQUID FLUORINE AT HIGH PRESSURES AND FLOW VELOCITIES

By Harold W. Schmidt

Lewis Flight Propulsion Laboratory
Cleveland, Ohio

AFMDC
TECHNICAL LIBRARY
AFL 2811

NATIONAL ADVISORY COMMITTEE
FOR AERONAUTICS
WASHINGTON
July 15, 1958

TECH LIBRARY KAFB, NM
0143888

NATIONAL ADVISORY COMMITTEE FOR AERONAUTICS

RESEARCH MEMORANDUM

COMPATIBILITY OF METALS WITH LIQUID FLUORINE AT HIGH PRESSURES AND FLOW VELOCITIES

By Harold W. Schmidt

4908

CB-1

SUMMARY

Specimens of various metals in selected geometric configurations were exposed to liquid fluorine under controlled conditions of flow and pressure. None of the metal samples eroded, decomposed, or exhibited any measurable physical or chemical changes. In a run made with a Teflon sample, instantaneous chemical reaction and decomposition occurred.

Fluorine was forced through 0.0135-inch-inside-diameter metal orifices with pressures up to 1500 pounds per square inch and velocities up to 376 feet per second; the maximum cumulative flow time per specimen was 1 hour and the minimum was 22 minutes. Larger orifices were subjected to even higher velocities (over 400 ft/sec) for periods up to 60 seconds. Only a slight yellowish color appeared on the upstream side of nickel and aluminum orifices. The brass orifice appeared slightly darker, and the stainless steel appeared etched.

Impact plates of stainless-steel weld slag and aluminum sustained fluorine environments with pressures from 100 to 1350 pounds per square inch and velocities from 136 to 355 feet per second for nearly 60 seconds without effects other than slight discoloration. No reaction was produced by sharp-edged turbulence test wedges of stainless steel, aluminum, and brass at velocities up to 169 feet per second.

Reynolds numbers as high as 2,580,000 were attained in 3/4-inch stainless-steel tubing submerged in liquid nitrogen. Sections of 1/4-inch tubing withstood fluorine flow velocities of over 80 feet per second and corresponding Reynolds numbers of approximately 600,000 without being immersed in liquid nitrogen. This would indicate that high flow rates alone are not responsible for failure of metallic fluorine-system components.

Two rotating-vane flowmeters were tested. A type with ball-bearing rotor shaft supports operated satisfactorily; one with bushing-type

bearings was inoperative in all runs because of mechanical failure at liquid-nitrogen temperatures.

INTRODUCTION

Fluorine is one of the most reactive of all oxidizing agents, and it is capable of reacting with nearly all materials. Because of this high reactivity, failures have frequently occurred in fluorine systems. The exact cause of fluorine-system failure is seldom known, since the violence of the reaction generally destroys the evidence. The cause can sometimes be deduced, however, from the effects of the failure. Reactions of fluorine that cause these failures are thought generally to be initiated by one or more of the following conditions:

(1) Improper choice of materials

(2) High flow velocity with resulting turbulence and impact effects

(3) High pressure

(4) Exposure of sharp edges or corners to fluorine flow

(5) Conditions occurring from high-velocity flow through pinhole leaks

(6) Contamination causing localized reactions

This investigation was made in an effort to determine the extent to which any of these conditions contributes to fluorine-system failures.

Metals generally considered to be suitable for fluorine flow systems were tested for compatibility when exposed to controlled fluorine environments. Specimens of nickel, stainless steel, aluminum, and brass were constructed in three basic configurations, representative of those commonly found in flow systems:

(1) Orifices for producing high velocities and simulating leaks

(2) Flat-faced plugs for impact tests

(3) Triangular wedges for turbulence effects and the exposure of sharp edges and corners to fluorine flow

These specimens were exposed to flow velocities up to 400 feet per second at pressures up to 1500 pounds per square inch. In addition, a Teflon wedge was tested for compatibility with liquid-fluorine flow at 50 pounds per square inch gage.

Most of the tests were run with the apparatus submerged in liquid nitrogen at -320° F; several runs were made with samples of metal tubing initially at ambient temperatures.

APPARATUS

The fluorine flow system consisted of two stainless-steel tanks mounted in an insulated liquid-nitrogen container. A pair of 3/4-inch stainless-steel flow lines with appropriate control valves was installed between the tanks so that fluorine could be cycled at high pressure from one tank to the other through alternate paths (fig. 1).

Each tank was fitted with a modified 3-way valve for pressurizing and venting. These modified valves, equivalent to two standard valves mounted on a "T" fitting, minimized the number of valves and valve connections in the apparatus. The three control valves (fig. 1) and both three-way valves were equipped with stainless-steel bellows-seal assemblies instead of the standard valve-stem packing; valve bodies were monel or stainless steel. Control-valve bellows were pressure-equalized directly with the tank pressure. Pneumatic actuators were used on all valves for remote control.

Three types of connections were used in constructing the flow apparatus. Permanent lines and fittings were welded by means of the standard V-notch welding technique; all the welded joints in the apparatus were X-ray photographed to ensure good weld quality in order to eliminate possible uncontrolled failures. All removable sections had flanged connections; the flange faces were serrated with concentric rings that pressed into soft annealed aluminum gaskets 1/16-inch thick. A third type of connection was used for valve installation: Flanged nipples were screwed into the threaded sections of the valve bodies and silver-soldered or Nicro-brazed in place, depending on the valve-body material; this eliminated the unreliability of the ordinary threaded connection in fluorine service.

An electrical safety system was incorporated by wrapping all critical parts of the flow system with wire. Thus, a fluorine burnout would burn through the wire, break the circuit, and so cause all pressurizing and flow valves to close and both vent valves to open.

Typical test-piece configurations are shown in the schematic sketches of figure 2. Pinhole orifices (0.0135-in. and 0.025-in. I.D.) and sharp-edged orifices (0.125-in. I.D.) were used for simulating leaks and determining erosion and reaction effects of high-velocity fluorine flow. Rounded-approach orifices (0.125-in. I.D.) were used to impinge fluorine against impact specimens at high velocities. Sharp-edged wedges

4908

CB-1 back

were inserted into the flow system to study the effect of severe turbulence and the exposure of sharp edges to fluorine flow.

Two series of runs were made to determine the effect of high pressures, high flow velocities, and sudden compression on stainless-steel and aluminum tubing without the benefits of liquid-nitrogen jacketing. Flanged adapters were attached to 12-foot lengths of 1/4-inch-diameter tubing. At the 6-foot point, a standard "T" fitting was installed with a 4-inch, closed-end compression tube connected to the open leg (fig. 2). The purpose of the "T" section was simply to aggravate the conditions by creating discontinuity in the lines and to provide greater possibility of adiabatic compression of gas bubbles in the fluid in an attempt to create localized "hot-spots."

To establish the feasibility of using rotating-valve-type flowmeters for liquid-fluorine service, two such flowmeters were installed in the apparatus with an 1/8-inch-diameter orifice located downstream of each meter. With this system, the meters were subjected to high pressures, while the downstream orifice maintained reasonable flow rates. One flowmeter was stainless steel with ball-bearing rotor mounts. The other was brass with a stainless-steel rotor and brass, bushing-type rotor-support bearings.

In addition to these test pieces, the tubing, fittings, valves, lines, and tanks of the flow apparatus were also evaluated for compatibility with fluorine.

PROCEDURE

To eliminate fluorine-system failures caused by contaminants, particular emphasis was placed on the cleaning, surface passivation, and assembly techniques used to prepare the apparatus for fluorine service. These techniques were evolved from past experiences and practices in handling liquid fluorine. The following procedure is now considered to be good standard practice:

Parts of the apparatus are first examined for burrs, metal shavings and filings, organic material, and dirt that can be removed mechanically or with suitable solvents. Each part is then washed with a 10-percent solution of nitric acid and rinsed with water. A drying agent such as acetone is used to remove the water and residual contaminants, after which the parts are thoroughly purged and dried with nitrogen or helium gas. In design and during assembly, care should be taken to avoid pockets or crevices, since a smooth and continuous surface is desirable in order to avoid the trapping of contaminants.

After assembly, the system is pressure-tested with inert gas (helium or nitrogen) at 125 to 130 percent of working pressure. In addition to a timed pressure test, all joints, seals, and connections are bubble-checked with a soap solution. When a leak-proof system has been obtained, the system is vented and evacuated to remove any remaining volatiles.

Fluorine gas is introduced at pressures from 50 to 100 pounds per square inch gage and is held for a total of 8 to 24 hours for complete passivation (or pickling) of the fluorine system. The system is then ready to be put into service.

Fluorine was loaded by condensing the gas into the tanks immersed in liquid nitrogen. The quantity of fluorine used in each series of runs was measured by observing the initial and final pressures and temperatures of the fluorine gas-storage system. After each series of runs, the nitrogen jacket was drained, and the fluorine was allowed to evaporate back into the storage containers. Unrecoverable or residual fluorine was disposed of by passing the gas through a carbon-fluorine reactor (ref. 1). When not in use, the test apparatus was kept at a slightly positive pressure with helium in order to prevent accumulations of moisture or contaminants in the air from entering the system.

The experimental runs were made with two specimens mounted in the apparatus each time. Arrangements of the test sections are shown in figure 3. Fluorine was forced through the first test section at high velocity, from one tank to the other, by means of helium pressurizing gas. The return pass was made similarly through the second test section. Flow times for each run were obtained from the recorded pressure profile of the receiving fluorine tank.

Thermocouples were imbedded in the specimens at points where pressure and velocity conditions were most severe. The temperatures were recorded on strip-chart recorders, with a control system that tripped an automatic shutdown circuit if a temperature increase of more than 20° F occurred.

After exposure to the programmed conditions, test specimens were to be evaluated by the following criteria:

(1) Changes in weight

(2) Chemical decomposition, erosion, and other surface effects by visual examination, microphotographs, and electron diffractions

(3) Temperature increase in the test-piece tip during the test by means of the thermocouple inserts

RESULTS AND DISCUSSION

This investigation was conducted under controlled conditions with the apparatus submerged in liquid nitrogen at -320° F. These conditions were expected to reduce the rate of chemical or mechanical attack so that the initiating factors could be isolated and the effects quantitatively measured. However, there were no cases of progressive chemical attack on any of the metallic specimens. The most significant result of high-pressure, high-velocity fluorine flow on the metals tested was the evident resistance to reaction. No erosion, decomposition, or measurable change in weight occurred. A tabulation of the experimental conditions and exposure times is presented in table I.

Flow Through Orifices

Fluorine was forced through pinhole orifices (0.0135-in. I.D.) with velocities from 184 to 376 feet per second. Maximum accumulated flow time per specimen was 1 hour; the minimum was 22 minutes. Larger orifices (0.025-in. I.D. leak-simulator and 0.125-in. I.D. rounded-approach) were subjected to velocities of approximately 400 feet per second for periods up to 60 seconds. Although the apparatus had been thoroughly cleaned and pickled, a small amount of metal-fluoride sediment was formed in the process of surface passivation. Occasionally this material would accumulate near the leak-simulator orifices and partially block the openings. These openings were cleared by reversing the flow direction momentarily or by blowing helium through the orifice in the reverse direction.

A slight yellowish discoloration appeared on the upstream side of the nickel and aluminum orifices. The brass orifice appeared slightly darker after exposure to fluorine, and the stainless-steel orifice had a frosted appearance; as in nickel and aluminum, these effects were greater on the upstream side of the orifice plate. The degree of discoloration corresponded to the fluoride film formed on the surfaces of the different materials, the higher pressures and longer exposure times producing heavier or darker films.

Impact and Turbulence Tests

Fluorine was impinged against impact specimens at velocities up to 350 feet per second, and sharp-edged turbulence test wedges were exposed to fluorine flow rates of 169 feet per second. Total exposure times varied from 3 to 58 seconds. The brass and aluminum turbulence wedges exhibited film formations similar to those on the orifices. These protective fluoride films were extremely thin; even the most minute surface scratches could be seen through them.

Thermocouples imbedded in the specimens recorded nearly constant temperatures throughout the runs. Very slight deviations were observed during the turbulence tests; these probably were caused by the transfer of heat from the compressed helium to the specimen after the liquid fluorine had passed.

Flow Through Tubing

The tests with 1/4-inch-diameter stainless-steel and aluminum tubing were made by suddenly releasing liquid fluorine at 1500 pounds per square inch gage into the tubes, which contained gaseous fluorine at ambient temperature. The resulting compression, followed by velocities as high as 87 feet per second, had no adverse effects on the system. The results of the cumulative exposure of the tanks and lines of the apparatus to the conditions of this investigation were similar to those observed on the individual specimens. The stainless-steel surfaces appeared to be slightly dulled and etched. The Reynolds numbers obtained, shown in table I, ranged from 88,000 to 632,000 for the 1/4-inch tubing and as high as 2,580,000 for the 3/4-inch apparatus flow lines.

Flowmeters

Six runs were made through the rotating-vane flowmeters with pressures increasing to a maximum of 1200 pounds per square inch gage. Approximately 60 pounds of fluorine was measured over a total exposure time of 66 seconds. The flowmeter with ball-bearing rotor supports operated satisfactorily in all six runs. The number of cycles per second is in linear agreement with the fluorine flow rate in five of the runs. The deviation in run 3 was probably due to operational error. However, upon inspection it was found that the rotor-mount retainer rings had become dislodged. Further operation might have caused failure. These retainer rings were probably loosened when the instrument was submerged in liquid nitrogen.

The flowmeter with bushing-type bearings apparently failed when submerged in the liquid nitrogen. The rotor was "frozen" throughout the tests. Later inspection revealed longitudinal failure of the rotor shaft due to compressive forces. This may have been caused by the difference in the expansion coefficient between the brass housing and the steel rotor shaft. There was no evidence of fluorine attack on the instrument.

Miscellaneous Results

A special test was made with a triangular-wedge turbulence-test specimen made of Teflon (polytetrafluoroethylene) in order to confirm its

reactivity with liquid fluorine under dynamic conditions. Teflon had previously been tested statically in liquid fluorine at 1500 pounds per square inch gage without reaction (ref. 2) and has been used successfully for valve stem packing and gasket material by avoiding direct contact with liquid-fluorine flow.

Under the flow conditions of this present run, failure was spontaneous and violent at 50 pounds per square inch. Reaction began immediately after the fluorine flow valve was opened, and a small piece of Teflon was blown clear of the reaction area. The remaining part was unchanged; chemical reaction had occurred evenly over its entire surface area and had resulted simply in diminishing the size of the original piece. A photograph of the reacted test specimen, together with the original configuration, is shown in figure 4. The backup flange used to clamp the specimen in the housing had a 3/4-inch hole through its center, so that the Teflon base acted as its own blowout disk. This feature, together with the inhibiting effect of the liquid-nitrogen bath, prevented damage to the rest of the system.

The fact that Teflon withstood the static exposure to liquid fluorine and yet failed in the dynamic test is of particular interest. Metals form a protective fluoride surface film when exposed to fluorine; Teflon, on the other hand, tends to react with fluorine to break down the polymer and forms saturated low-molecular-weight fluorocarbons, such as CF_4 (refs. 3 and 4). These fluorocarbons would not adhere to the Teflon surface in a dynamic system and, therefore, would be of no value as a protective film.

SUMMARY OF RESULTS

The following results were obtained from repeated exposure of metal specimens to liquid fluorine under dynamic conditions:

1. No measurable physical erosion or chemical attack occurred with nickel, stainless steel, aluminum, or brass.

2. All the configurations tested were found to be acceptable for fluorine systems under the conditions imposed; these included orifices, sharp-edged wedges, and impact plates.

3. Flow velocities up to 400 feet per second at pressures up to 1500 pounds per square inch gage failed to cause erosion or to initiate chemical reaction of the metal specimens with liquid fluorine.

4. Sudden release of high-pressure liquid fluorine in metal tubes containing gaseous fluorine without liquid-nitrogen jacketing had no effect on the system.

5. Two rotating-vane-type flowmeters were tested without the failure attributed to high-pressure fluorine flow, although one meter failed structurally after reaching liquid-nitrogen temperature.

6. Teflon did not resist attack when exposed to liquid-fluorine flow.

CONCLUDING REMARKS

The results of this investigation show that turbulence, fluid friction, and impact effects resulting from high-pressure, high-velocity liquid-fluorine flow through clean tubing or past irregularly shaped or sharp-edged objects are not likely to initiate fluorine-system failures. The successful operations achieved in this series of compatibility tests can be attributed to the meticulous care that was taken in the assembly, cleaning, and passivation techniques used before exposure of the system to severe dynamic fluorine service. Therefore, improper choice of hardware, poor assembly techniques, and inadequate cleaning and pickling procedures are considered to be the primary cause of fluorine-system failures.

Lewis Flight Propulsion Laboratory
National Advisory Committee for Aeronautics
Cleveland, Ohio, April 17, 1958

REFERENCES

1. Schmidt, Harold W.: Reaction of Fluorine with Carbon as a Means of Fluorine Disposal. NACA RM E57E02, 1957.

2. Price, Harold G., Jr., and Douglass, Howard W.: Nonmetallic Material Combatibility with Liquid Fluorine. NACA RM E57G18, 1957.

3. Haszeldine, R. N., and Sharpe, A. G.: Fluorine and Its Compounds. John Wiley & Sons, Inc., 1951, p. 100.

4. Grosse, Aristid V., and Cady, George H.: Properties of Fluorocarbons. Ind. and Eng. Chem., vol. 39, no. 3, Mar. 1947, pp. 367-374.

4908

CB-2

4908

TABLE I. - COMPATIBILITY OF METALS WITH LIQUID FLUORINE AT HIGH PRESSURES AND FLOW VELOCITIES

Configuration	Material	Experimental conditions						Remarks
		Initial pressure, lb/sq in. gage	ΔP, lb/sq in.	Fluorine, lb	Time, sec	Flow rate, lb/sec	Velocity, ft/sec	
Leak-simulator orifice; 0.0135-in. I.D., L/D = 27.75	Aluminum (24 ST)	525 1012 1500 1460 1339	377 864 1432 1436 1339	9.64 9.64 12.43 15.25 15.25 82.21	528 340 [a]436 424 432 2180 (36 min)	0.0183 .0285 .0285 .0360 .0353	184 293 287 372 365	Slight yellowish discoloration on upstream side of orifice
	Stainless steel (347)	1386 1390 1500 1510 1505 1512 1500	1226 1206 1375 1350 1443 1408 1398	17.7 17.7 13.85 13.85 13.85 13.85 13.85 104.85	[a]616 578 [a]518 488 472 480 500 3652 (60.9 min)	0.0287 .0306 .0267 .0284 .0284 .0289 .0277	297 317 278 283 303 299 286	Slight frosted or etched effect on upstream side Less affected on downstream side
	Brass (64 SE)	1495 1500 1465	1395 1390 1424	12.43 15.25 15.25 42.93	344 [a]670 440 1454 (24.2 min)	0.036 .023 .035	378 235 358	Slightly darker after exposure
	Nickel	1100 1415	1015 1338	11.92 11.92 23.84	[a]696 [a]616 1312 (21.9 min)	0.01713 .01935	177 200	Slight yellowish discoloration on upstream side
Leak-simulator orifice; 0.025-in. I. D., L/D = 5	Aluminum (soft)	1453 1465 1486 1500 1495 1492 1505	1315 1360 1302 1282 1326 1391 1375	17.7 17.7 13.85 13.85 13.85 13.85 13.85 104.85	132 130 110 110 107 108 106 803 (13.4 min)	0.134 .136 .126 .126 .130 .128 .131	417 410 380 379 390 386 394	Slight frosted appearance on both sides
Sharp-edged orifice; 1/8-in. I. D.	Aluminum (soft)	785 1480 1465 1440 1452 1465 1470	505 1203 1169 1144 1159 1196 1192	10.45 10.45 10.45 10.45 10.45 10.45 10.45 73.15	6.8 4.4 4.6 4.6 4.0 4.6 4.0 33.0	1.54 2.38 2.27 2.27 2.61 2.27 2.61	185 286 273 273 315 273 316	Slightly coated on downstream side; frosty appearance Slightly etched on upstream side
	Brass (64 SE)	1008 1482 1505 1498 1504 1484 1500 1493 1450 1465 1500	773 1206 1249 1226 1223 1232 1223 1233 1190 1334 1358	9.74 9.74 9.74 9.74 9.74 9.74 9.74 9.74 9.74 9.74 9.74 107.14	5.7 4.9 4.2 4.5 4.8 4.7 4.8 4.4 4.7 4.4 4.0 51.1	1.71 1.99 2.32 2.16 2.03 2.07 2.03 2.21 2.07 2.21 2.43	206 240 279 261 245 249 244 267 249 266 293	Purple discoloration on downstream side of orifice
	Stainless steel (304)	85 121 300 408 1006 1202	85 114 278 391 811 990	9.97 9.97 9.97 9.97 9.97 9.97 59.82	20.5 16.0 9.0 9.1 6.0 5.44 66.04 (1.1 min)	0.485 .622 1.108 1.095 1.66 1.83	58.4 74.9 133.3 131.8 200.0 220.0	

[a]Orifice clogged.

4908

CB-2 back

TABLE I. - Concluded. COMPATIBILITY OF METALS WITH LIQUID FLUORINE AT HIGH PRESSURES AND FLOW VELOCITIES

Configuration	Material	Experimental conditions							Remarks
		Initial pressure, lb/sq in. gage	ΔP, lb/sq in.	Fluorine, lb	Time, sec	Flow rate, lb/sec	Velocity, ft/sec	Reynolds number, Re	
Impact plate with Round-edged orifice; 1/8-in. I. D.	Stainless steel weld slag (304) Nickel	1344	1206	11.92	5.78	3.17	355		Very slight etched effect, but no apparent attack on impact sample Slight yellowish discoloration on upstream side of orifice
		1500	1362	11.92	4.5	2.65	349		
		102	85	9.74	8.8	1.13	136		
		1000	704	9.74	5.8	2.12	201		
		1475	1170	9.74	4.2	2.32	279		
		1485	1173	9.74	4.4	2.21	280		
		1490	1219	9.74	3.3	2.95	350		
		1471	1168	9.74	4.6	2.12	280		
		1495	1196	9.74	4.5	2.16	282		
		1490	1176	9.74	4.0	2.43	293		
		1495	1185	9.74	4.2	2.32	284		
		1490	1337	9.74	3.9	2.50	301		
		1500	1349	9.74	4.0	2.43	293		
				130.98	57.8				
Impact plate with Round-edged orifice; 1/8-in. I. D.	Aluminum (soft) Stainless steel (304)	800	568	10.45	5.88	1.78	214		Slight etched effect on impact sample No effect on orifice except slight bluish cast on downstream side
		1470	1195	10.45	4.2	2.49	298		
		1475	1172	10.45	4.8	2.18	262		
		1470	1180	10.45	4.6	2.27	273		
		1465	1165	10.45	4.4	2.38	286		
		1455	1169	10.45	4.3	2.43	293		
		1460	1167	10.45	4.6	2.27	273		
				73.15	32.8				
Turbulence test wedge (sharp-edged)	Stainless steel (347)	1340	862	16.35	1.14	14.34	90.0		No effect
		1340	740	16.35	1.26	12.97	86.4		
		1330	886	16.35	1.0	16.35	106.5		
		1404	978	16.35	.9	18.16	120.5		
				65.4	4.3				
	Brass (64 SE)	1319	800	10.2	0.9	11.3	70		Very slight frosted appearance; slightly lighter in color than parent metal
		1383	1036	10.2	.5	20.4	135		
		1286	1028	10.2	.57	17.9	118		
		1346	1100	10.2	.66	15.5	102		
				40.8	2.63				
	Aluminum (soft)	1443	1200	16.35	0.7	23.4	155.0		All four sides of sample had sooty film or coating. Not adherent; rubbed off easily. Did not seem to be in metal surface but on it; metal underneath was unchanged
		1260	761	16.35	3.14	5.2	34.4		
		1370	872	16.35	3.10	5.3	39.4		
		1295	921	16.35	1.96	8.3	54.0		
		1360	873	16.35	2.75	5.9	39.5		
		1295	1057	10.20	.86	17.6	117.0		
		1357	1067	10.20	.57	17.9	118.0		
		1391	1103	10.20	.40	25.5	169.0		
				112.35	13.20				
	Teflon	50	50	----	----	----	----		Immediate ignition on contact
1/4-In. tubing; 0.1285-in. I. D., length = 11.3 ft	Stainless steel (304)	[b]0-120	115	11.0	68.8	0.16	17.4	88,000	All runs with 1/4-in. tubing made without liquid-nitrogen bath. Initial temperature, 75° F
		[b]0-420	397	11.0	26.4	.417	45.4	232,000	
		[b]0-1017	857	11.0	18.24	.603	65.7	337,000	
		[b]0-1505	1297	11.0	14.64	.751	81.7	543,000	
				44.0	128.08 (2.13 min)				
1/4-In. tubing; 0.182-in. I. D., length = 12.2 ft	Aluminum (5052 SO)	[b]0-133	118	11.0	25.6	0.43	24.4	178,000	All runs with 1/4-in. tubing made without liquid-nitrogen bath. Initial temperature, 75° F
		[b]0-410	385	11.0	22.0	.50	28.4	205,000	
		[b]0-1010	768	11.0	12.0	.917	52.0	377,000	
		[b]0-1500	1275	11.0	7.56	1.455	84.8	614,000	
		[b]0-1485	1312	11.0	7.16	1.536	87.3	632,000	
				55.0	74.12 (1.24 min)				
3/4-In. tubing	Stainless steel (304)	1260	----	16.35	3.14	5.2	17.6	526,000	The 3/4-in. tubing was part of the test apparatus
		1370	----	16.35	3.10	5.3	20.3	600,000	
		1360	----	16.35	2.75	5.9	20.4	602,000	
		1340	----	16.35	1.96	8.3	28.5	843,000	
		1340	----	16.35	1.26	13.0	44.5	1,315,000	
		1330	----	16.35	1.14	14.3	48.3	1,370,000	
		1319	----	16.35	1.0	16.4	55.6	1,650,000	
		1391	----	10.2	.9	18.2	62.1	1,835,000	
			----	16.35	.7	23.4	71.4	2,110,000	
			----	10.2	.4	25.5	87.3	2,580,000	
Rotating-vane flowmeter, ball-bearing (stainless steel rotor)	Stainless steel (316, 420, 430, 440)						Cycles[c] per second		Rotor-mount retainer rings slightly eroded and loose; would have affected running on continued operation
		65	----	9.97	20.8	0.485	46.5		
		121	----	9.97	16.0	.622	61.8		
		300	----	9.97	9.0	1.108	83.0		
		408	----	9.97	9.1	1.095	109.5		
		1005	----	9.97	6.0	1.66	165.0		
		1202	----	9.97	5.44	1.83	183.0		
				59.82	66.04 (1.1 min)				
Rotating-vane flowmeter, bushing-bearing (stainless steel rotor)	Brass	72	----	9.97	----	----	----		No flow indication in any of six runs No apparent fluorine attack Mechanical failure due to difference in expansion of rotor in housing
		110	----	9.97	----	----	----		
		210	----	9.97	----	----	----		
		306	----	9.97	5.0	2.0	----		
		760	----	9.97	3.8	2.6	----		
		1010	----	9.97	3.2	3.1	----		
				59.82					

[b]Instantaneous pressure release.
[c]100 cycles = 1 lb liquid fluorine.

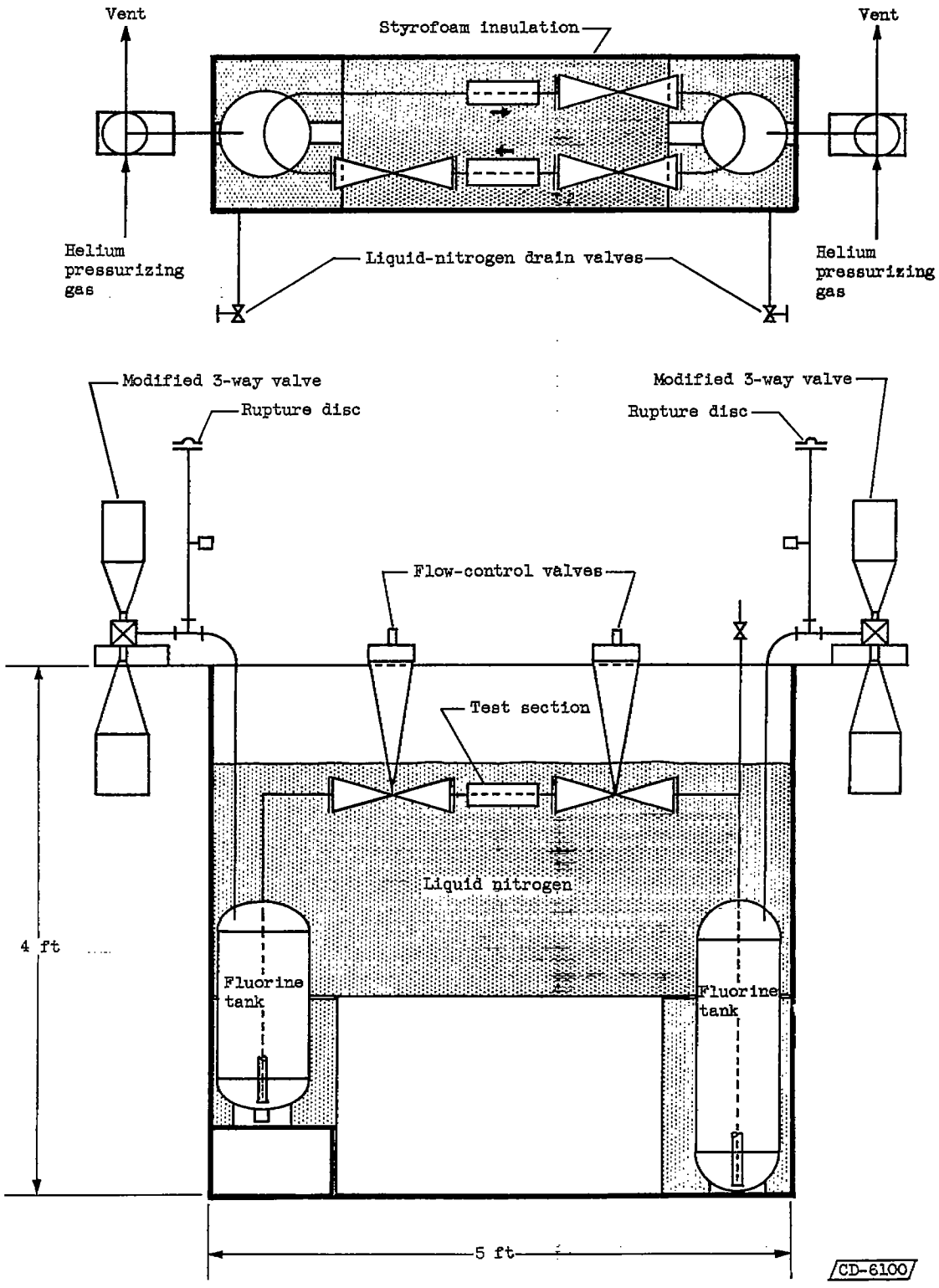

Figure 1. - High-pressure fluorine flow apparatus.

4908

4908

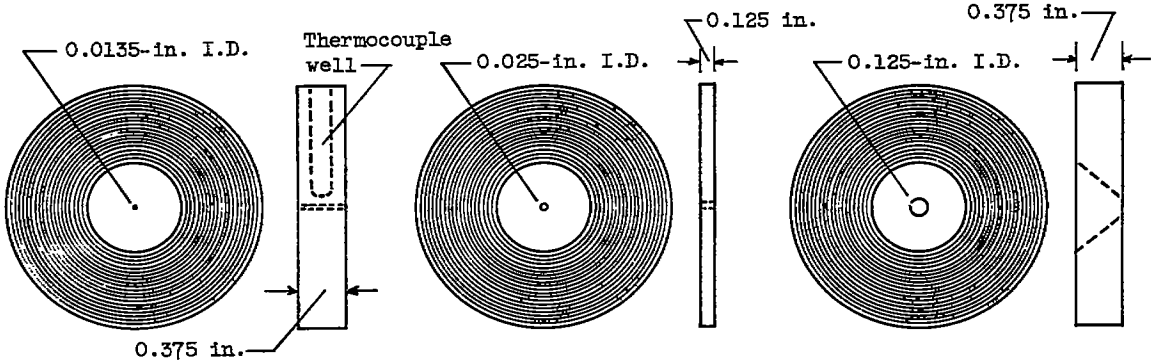

(a) Leak-simulator orifices. (b) Sharp-edged orifice.

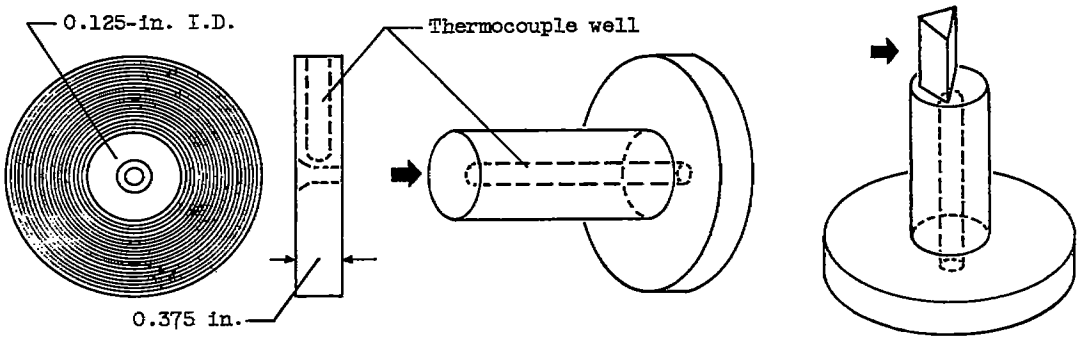

(c) Rounded-approach orifice. (d) Impact specimen. (e) Triangular wedge.

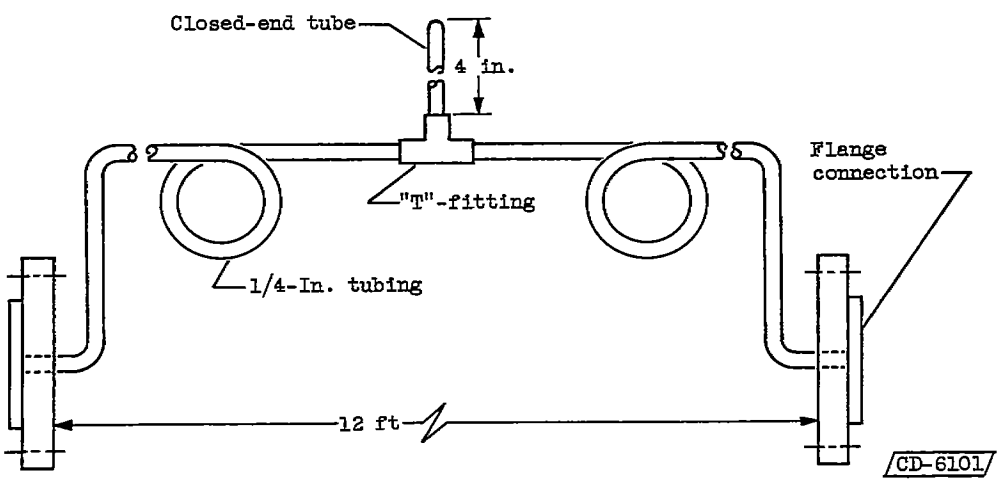

(f) Test section for fluorine flow test without liquid-nitrogen bath.

Figure 2. - Test specimen configurations.

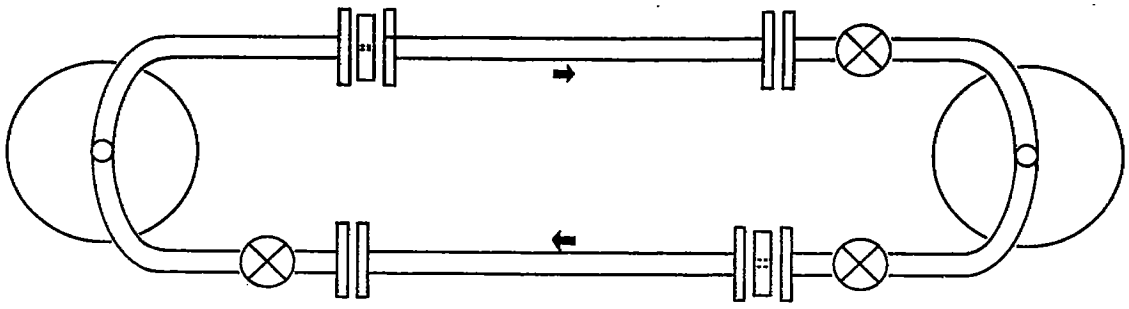

(a) Setup for testing orifices.

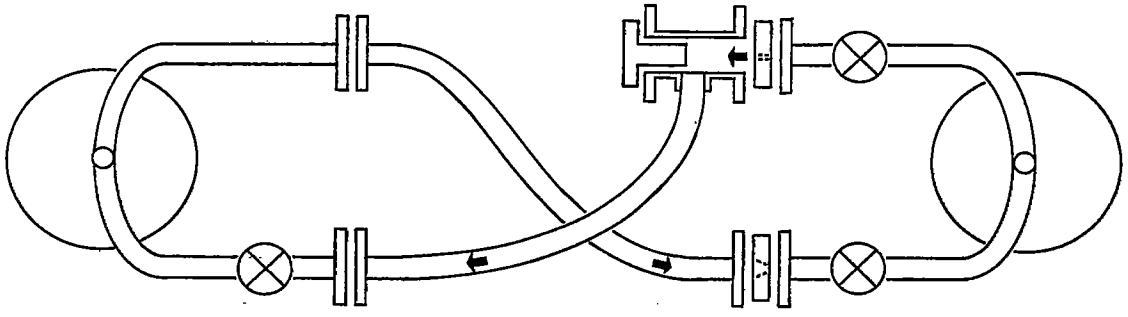

(b) Setup for testing impact and sharp-edged orifice specimens.

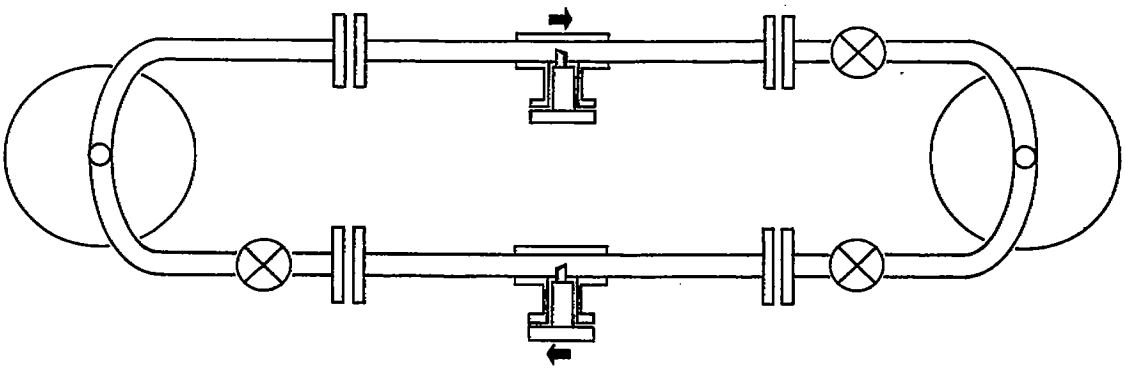

(c) Setup for testing turbulence wedges.

CD-6102

Figure 3. - Flow diagram showing test-section arrangement.

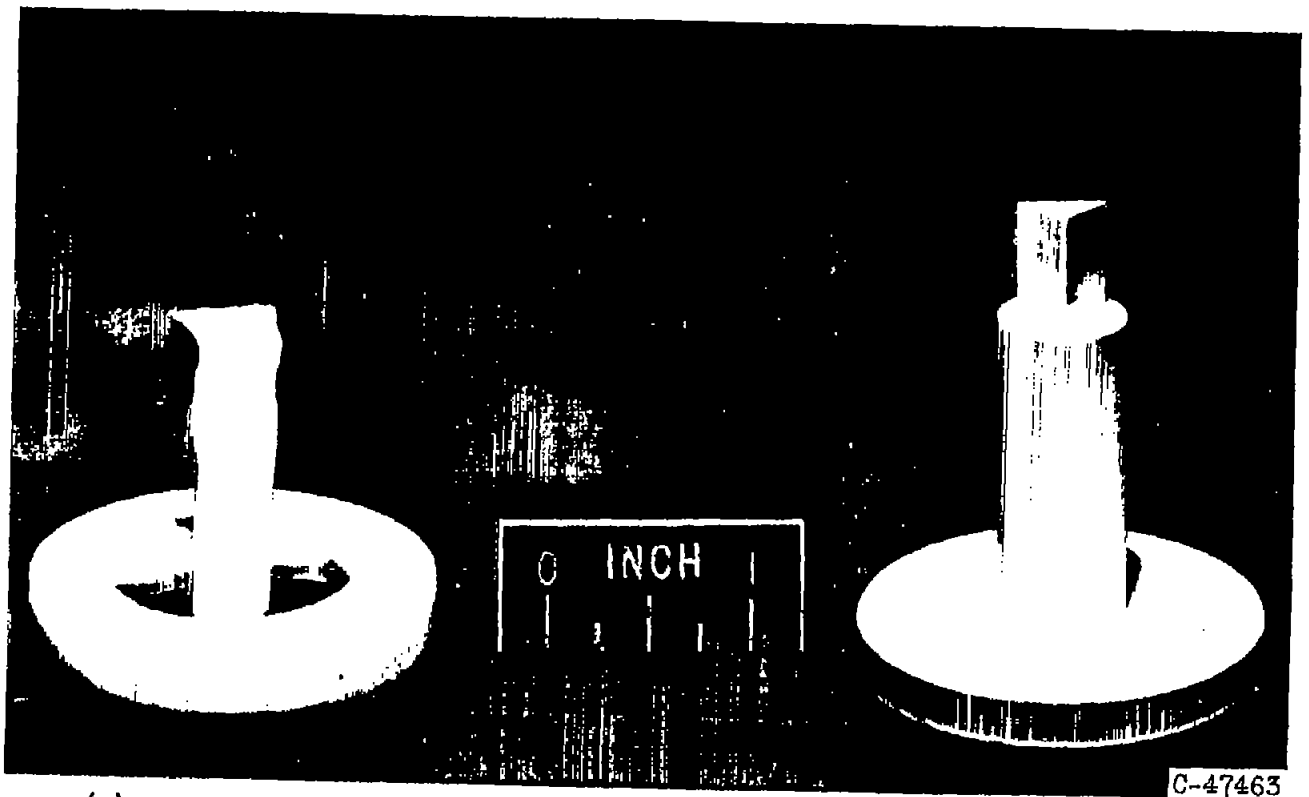

(a) After exposure.

(b) Configuration before exposure.

Figure 4. - Teflon turbulence specimen exposed to fluorine flow.

NACA - Langley Field, Va.