10475
NACA TN 4139

TECH LIBRARY KAFB, NM
0066857

NATIONAL ADVISORY COMMITTEE FOR AERONAUTICS

TECHNICAL NOTE 4139

WALL PRESSURE FLUCTUATIONS IN A TURBULENT BOUNDARY LAYER

By William W. Willmarth

California Institute of Technology

Washington

March 1958

AFMDC
TECHNICAL LIBRARY
AFL 2811

TECH LIBRARY KAFB, NM

0066857

NATIONAL ADVISORY COMMITTEE FOR AERONAUTICS

TECHNICAL NOTE 4139

WALL PRESSURE FLUCTUATIONS IN A TURBULENT BOUNDARY LAYER

By William W. Willmarth

SUMMARY

When a turbulent boundary layer is produced by air flow past a solid surface, the turbulence in the boundary layer can generate a sound field in the free stream and will also induce fluctuating loads on the solid surface. If the surface is flexible, this motion will generate an additional sound field on both sides of the surface.

In an initial investigation of the latter form of sound generation, suitable equipment has been developed to measure the fluctuating wall pressure in the turbulent boundary layer. The equipment includes a specially designed low-noise- and low-turbulence-level wind tunnel and a small barium titanate transducer and preamplifier combination for frequencies up to 50 kilocycles. The transducer and preamplifier may be useful for other applications.

Using this equipment, some of the properties of the wall pressure fluctuations in a turbulent boundary layer have been measured. It was found that the spectrum of the wall pressure fluctuations extended to 50 kilocycles and that the root-mean-square wall pressure was a constant part (0.0035) of the free-stream dynamic pressure for $0.2 < M < 0.8$ and $1.5 < Re < 20 \times 10^6$. A few typical spectra are given for different values of Reynolds number and Mach number.

INTRODUCTION

A problem that has received little attention is that of noise production by a turbulent boundary layer. A description of this problem shows that there are really two sources or mechanisms of noise generation. Consider an external flow field which causes a turbulent boundary layer to develop along one side of an impervious wall. On the other side of the wall, which may be flexible or rigid, is a stationary fluid, which is shown in the following sketch:

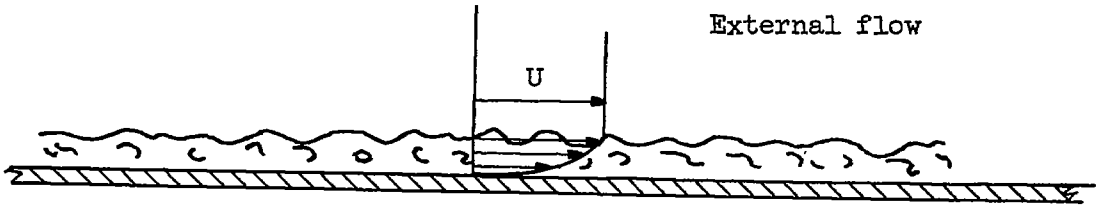

The first mechanism of sound generation will be singled out when the wall is absolutely rigid, since the turbulent flow will then be the only source of sound. This mechanism of sound generation has already been discussed from a theoretical point of view (refs. 1, 2, and 3). However, pertinent experiments to determine the characteristics of the turbulent boundary-layer flow that are of importance in the generation of this type of sound and the properties of the generated sound field have not yet been made. In fact, the flow speed at which the intensity of this type of sound field becomes appreciable is not yet known.

The second mechanism of sound generation appears when the wall is flexible enough to deflect under the fluctuating forces imposed by the boundary layer. In this case, the wall motion couples the internal fluid to the external flow field. The resulting motion of the wall causes a sound field in the stationary internal fluid.

The intensity of the internal sound field can be appreciable in an airplane fuselage. According to reference 4, at high subsonic speeds a large portion of the sound inside the fuselage of an airplane is caused by the boundary layer on the rearward portion of the fuselage. One might expect to encounter internal boundary-layer noise in the case of other vehicles such as ships or automobiles. A related phenomenon is noise generation outside a pipe or duct when the fluid flow inside is fully turbulent.

The "internal" boundary-layer-noise problem, in the sense of the above sketch, must be formulated before appropriate experiments or theories can be devised. In the first approximation the wall motion and the energy content of the radiated sound field will be assumed small. Two simplifications are then possible as follow:

(1) The fluctuating forces imposed by the boundary layer will be essentially the same on a rigid wall as on a flexible moving wall. Thus, these forces may be determined on a rigid wall.

(2) The weak radiated sound field will not affect the wall motion at distant points. Thus, the forces acting on the wall will be caused only by the local fluid properties.

The fluctuating forces caused by the turbulent boundary layer along the wall are the wall static pressure and shearing stress. For the present only the static pressure will be considered since for thin plates, as in an airplane skin, the wall motion is essentially deflection normal to the surface. (The wall shearing stress may be of importance in special cases.)

The problem can now be formulated by considering the fluctuating wall static pressure as the driving force and writing the equations of motion for the wall and the fluid on each side of the wall. The assumptions are that the radiated sound does not affect the wall motion at distant points and that the wall static pressure (the driving force) is the same on the moving wall as on a rigid wall.

Theoretical treatments of some aspects of the internal boundary layer noise problem have already been given by Kraichnan, reference 5, Corcos and Liepmann, reference 6, and Ribner, reference 7. Kraichnan has given some integral expressions for the statistical properties of the fluctuating static pressure in anisotropic turbulence and has applied them to flow models similar to those observed in boundary-layer turbulence. In references 6 and 7 consideration is given to some aspects of the internal sound field taking into account the properties of the flexible wall and the boundary layer. No definite conclusion could be reached by any of these authors because of the lack of experimental information on the properties of the fluctuating pressure in a turbulent boundary layer.

Throughout the course of this research program the author has had the advantage of a close association with Prof. H. W. Liepmann who suggested this problem. The discussions and valuable suggestions that resulted are deeply appreciated.

The help of Mr. P. F. R. Weyers in building the low noise level facility is appreciated. Mr. Marvin E. Jessey was responsible for the selection of the electronic equipment and design of the preamplifier.

The present work represents part of a long range investigation of aerodynamic noise carried out at the Guggenheim Aeronautical Laboratory, California Institute of Technology, under the sponsorship and with the financial assistance of the National Advisory Committee for Aeronautics.

SYMBOLS

a	speed of sound
f	frequency
l	length
M	Mach number
m	mass
P	static pressure of fluid
P_o	reservoir pressure
$\overline{P^2}$	mean-square static pressure, $\int_0^\infty \tilde{P}(\omega)\ d\omega$
$\tilde{P}(\omega)$	power spectrum of static pressure
q	dynamic pressure of fluid
Re	Reynolds number based on distance downstream of pipe entrance
T	fluid temperature
t	time
U	free-stream velocity of fluid
x	distance downstream of pipe entrance (see fig. 1)
δ^*	boundary-layer displacement thickness
ρ	fluid density
μ	fluid viscosity
ω	angular frequency, $2\pi f$

PURPOSE OF PRESENT INVESTIGATION

As discussed in the introduction a knowledge of the wall pressure fluctuations is essential for an understanding of the sound field in the internal region which is caused by the deflection of the wall. Since the pressure fluctuations are random, the space and time correlations of the wall pressure must be known before the motion of the wall can be computed (see ref. 6 for the appropriate equations).

It was decided that an experimental approach to an understanding of boundary-layer noise should be directed towards the measurement of the fluctuating wall pressure in a turbulent boundary layer on a rigid wall. The rigidity of the wall simplifies the measurements and should not introduce appreciable deviations from the case of a flexible wall. In addition, knowledge of the fluctuating wall pressure should increase the present knowledge of turbulent shear flows in general.

As a first step in the program it was decided that the fluctuating static pressure at one point should be measured. Thus, only the time correlation can be obtained. The quantities to be measured are then the mean square of the pressure at a point and the power spectrum of the pressure at a point. Once the power spectrum is known, the time correlation can, in principle, be determined by quadratures. After the fluctuating pressure at a point has been measured it should then be possible to measure the spatial correlation using the techniques already developed.

At the present time the first portion of this program has been accomplished but at the expense of considerable time and effort. First, a low-noise- and low-turbulence-level wind tunnel was developed. Then a suitable high-frequency transducer and the necessary electronic equipment were assembled. Finally, the mean-square and the power spectrum of the wall pressure have been measured. The power-spectrum measurements are not yet in final form (see section "Discussion of Results").

EXPERIMENTAL EQUIPMENT AND METHOD

Wind Tunnel

The measurements of the fluctuating pressure were made on the inside wall of a 5-foot-long, 4-inch-inside-diameter brass pipe of 1/8-inch wall thickness. The pipe is supplied with high-speed air from the contraction cone of a low-noise- and low-turbulence-level facility described in appendix A. Additional information is contained in reference 8. The facility provides a low-turbulence-level source of air for speeds restricted at present to a Mach number range $0 < M < 0.8$ at sound pressure

levels below 40 decibels (relative to 0.0002 dyne/cm^2) for frequencies above 300 cps.

A sonic throat was used to prevent upstream propagation of diffuser noise and to furnish speed control. The sonic throat consisted of various-sized ogival central bodies and removable venturi tubes. The venturi cross sections were circular arcs. The central bodies had blunt bases in order to stabilize the upstream flow by providing a fixed location for boundary-layer separation. A sketch of the pipe test section is shown in figure 1.

Considerable care was exercised in order to isolate the pipe from compressor and building vibrations. The air-supply pipe is mounted on rubber pads, the test-section pipe, on felt pads. Rubber couplings, made from a motorcycle inner tube, were used to isolate the test-section pipe from the pipe downstream of the sonic throat.

In order to increase the mass of the pipe supported on the felt pads and to help damp pipe vibration, a total of 300 pounds of lead shot contained in 10-pound bags was distributed along the length of the pipe. Vibration tests established that when the pipe downstream of the sonic throat was vibrated, less than 1 percent of the average amplitude of vibration of the downstream pipe was transmitted to the upstream test section.

Initial Tests

Initial tests in an attempt to measure the wall pressure fluctuations were made using a condenser microphone (Altec Lansing Corporation, type 21-BR-150). A small hole was drilled in the pipe wall and the microphone was placed over the hole and sealed to prevent air flow into the pipe. It was found that wall pressure fluctuations were present when the boundary layer was turbulent and decreased considerably when the boundary layer was laminar. It was also found that the spectrum of the pressure extended far beyond the range of the microphone, $20 < f < 15{,}000$ cps. In addition, a very severe resonance peak was found with the above arrangement. Upon increasing the dimensions of the sealed cavity over the hole the resonant frequency decreased. It was concluded that the cavity and small hole formed a Helmholtz resonator. In view of this, any measurements of the pressures would surely be in error since the flow of air through the hole might affect the boundary layer.

Barium Titanate Transducer

A program to develop a transducer flush with the pipe wall with a response extending to 50 kilocycles was begun. Polycrystalline barium

titanate was selected for the transducer. This material has a number of advantages. It is readily available, has a stable output in time, has a high dielectric constant, and can be obtained in various shapes.

It was intended that the frequency response, to 50 kilocycles, would be obtained by designing a transducer with a natural frequency much higher than 50 kilocycles. Unfortunately, initial tests showed that when the barium titanate was fastened rigidly to the wall of the pipe it is an excellent strain gage and accelerometer. The signals picked up were caused by the small vibrations and strain waves in the wall of the brass pipe. It became necessary to isolate the transducer from the pipe wall. The details of the transducer development and techniques are discussed in appendix B. A sketch of the transducer in its present form is shown in figure 2. As shown in the sketch, the sensitive element is mounted flush with the inside surface of the pipe with a 0.005-inch annular gap around it.

Electronic Equipment

The small size of the transducer necessitated the development of a low-noise-level preamplifier. A successful solution to this problem was obtained by the development of a preamplifier of low noise level (4×10^{-6} volts) for the frequency range from 300 to 50,000 cps (see fig. 3). The details are given in appendix C. In addition to the preamplifier, another amplifier was used to increase the output voltage. The total response of the amplifier combination was uniform, within ±2 percent, from 300 to 50,000 cps. After amplification the output passed through a variable band-pass filter (Krohn-Hite, model 310-AB) and then to a vacuum tube voltmeter (Hewlett-Packard model 400 A), a constant-band-width valve analyzer (Donner, model 20 (half band width, 20 cycles)), and an oscilloscope. A block diagram is shown in figure 4.

Transducer Calibration

The response of the transducer was not uniform over the frequency range $300 < f < 50{,}000$ cps. Resonances were found at frequencies of 5,000, 20,000, 33,000, and 65,000 cps. These resonances were damped by modifications of the transducer but the remaining resonances at 6,000 cps and 65,000 cps could not be completely eliminated. More complete information and the calibration procedure are given in appendix D. The comparison calibration curve of the transducer from 300 to 15,000 cps is shown in figure 5. The response to a small air jet is shown in figure 6.

Ordinary Static Pressure and Total-Head Measurements

The flow speed in the pipe was computed, assuming isentropic flow, from measured values of the stagnation and static pressure in the pipe. The static pressures were measured through small holes drilled in the pipe wall. The stagnation pressure was normally measured upstream of the contraction cone. Boundary-layer surveys were made with an impact pressure probe that could be traversed from the wall into the free stream. The probe opening was of rectangular cross section approximately 0.003×0.020 inch. All pressures were measured on a mercury micromanometer to ± 0.5 millimeter of mercury.

DISCUSSION OF RESULTS

When the flush transducer system was complete, measurements of the wall pressure were resumed. It was realized that the imperfections in the response might lead to trouble later on but it was felt that much useful information would be obtained with the transducer.

Response of Transducer in a Laminar and Turbulent Boundary Layer

A crucial experiment was performed which was designed to show what portion of the transducer response was caused by the turbulent boundary layer. Near the entrance to the pipe test section it was found that the boundary layer was laminar. By tripping this boundary layer the response of the transducer to a laminar and turbulent boundary layer could be observed. Boundary-layer profiles, obtained with the impact pressure probe, showed that the tripped boundary layer was turbulent.

The transducer was mounted in the pipe wall at a station 8 inches ($x = 8$ inches) from the contraction cone (see fig. 1). Small holes at a station 1.44 inches upstream of the transducer were drilled through the pipe wall. The geometry is shown in the following sketch:

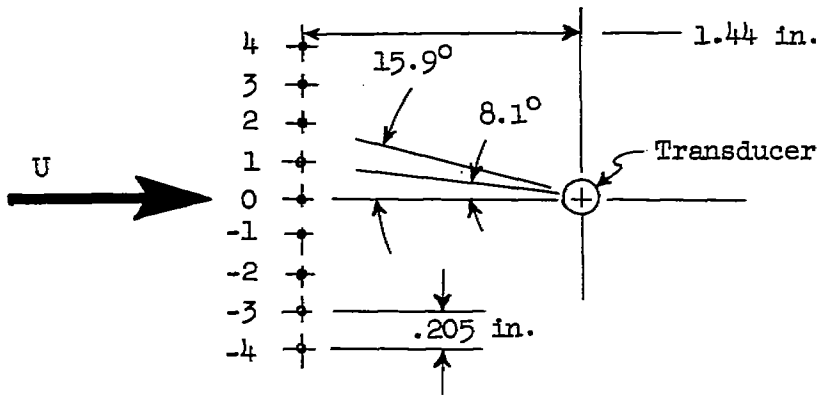

The boundary layer was tripped by admitting air through the holes. This was accomplished by removing a scotch-tape seal over the holes (the pressure inside the pipe was always less than atmospheric). It was found that the transducer response changed only when the holes numbered 0, 1, and -1 immediately upstream of the transducer were unsealed. Figure 7 shows an oscillograph picture of the transducer response.

This result means that an appreciable response from the transducer is obtained from pressure fluctuations caused by the boundary layer covering the transducer. This is supported by the fact that the spreading half angle of a turbulent spot is 8.6° according to Mitchner, reference 9. In the present case the spreading half angle of the turbulence spots must lie between 8.1° corresponding to holes numbered 1 and -1 and 15.9° corresponding to holes numbered 2 and -2 when the angles are measured from the center of the transducer. These results were found for all Mach numbers in the range $0.15 < M < 0.45$. For these measurements it was found that the overall root-mean-square background noise level with a laminar boundary layer over the transducer was always less than 1/6 of the root-mean-square response to the turbulent boundary layer (see fig. 7, for example). Intermittent bursts of turbulence were observed at the higher Mach numbers ($M \approx 0.43$). At still higher Mach numbers $M \geqslant 0.45$ natural transition occurs and the boundary layer becomes completely turbulent at the station $x = 8$ inches.

Power spectra of the wall pressure fluctuations at the station $x = 8$ inches are shown in figure 8 for two Mach numbers and with a laminar and tripped turbulent boundary layer. The spectra have been normalized so that the maximum reading is 1 for the tripped boundary layer spectra. The low level of the background noise signal with a laminar layer is apparent in each case. These spectra will be discussed again subsequently.

In addition to the above result, the fact that the output of the transducer is not appreciably affected until the turbulence passes over the sensitive element implies that there is very little aerodynamic noise

generated by the turbulent boundary layer. It would be expected that some change in output would be noticed if appreciable aerodynamic noise were generated since the transducer is quite near the turbulent boundary layer developed when holes numbered 2 and -2 are used for tripping. The possibility that appreciable aerodynamic sound is generated at higher speeds is not ruled out since laminar flow could not be maintained above a Mach number of 0.45.

Power-Spectrum Measurements

After it had been established that the transducer response was caused by the pressure fluctuations in the turbulent boundary layer, the power spectrum of these fluctuations was measured. The measurements were made over a considerable range of Mach number $0.2 < M < 0.80$ and Reynolds number $1.5 < Re < 20 \times 10^6$. All Reynolds numbers were based on distance from the pipe entrance (see fig. 1). Over this range the displacement thickness of the turbulent boundary layer varied from approximately $\delta^* = 0.025$ inch after tripping at $x = 8$ inches to $\delta^* = 0.090$ inch at $x = 58$ inches. The velocity profiles were typical turbulent profiles.

A dimensional analysis of the power spectrum along the lines suggested by Liepmann (ref. 10) leads to the conclusion that the nondimensional power spectrum $\frac{U\tilde{P}(\omega)}{\delta^* q^2}$ should be a unique function of $\frac{\omega\delta^*}{U}$, M, and Re. This result can be obtained as follows.

It is a matter of experience that in a given fluid flow an equilibrium turbulent boundary layer will be developed for given values of the parameters M and Re (zero pressure gradient is assumed). In the boundary layer the fluid flow variables a, P, ρ, and T and the fluid velocity all take on values appropriate to the particular boundary-layer flow specified by M and Re.

For a description of the fluctuating pressure it is necessary to know (1) the frequency with the dimensions of $1/t$ and (2) the power spectrum of the pressure with the dimensions Pressure $\times$ Time $= m^2 l^{-2} t^{-3}$. Now, the dimensionless ratio of mean-square wall pressure to dynamic pressure squared must be a function of M and Re in the equilibrium turbulent boundary layer

$$\frac{\overline{P^2}}{q^2} = F(M,Re) \tag{1}$$

Assuming that P possesses a power spectrum equation (1) becomes

$$\int_0^\infty \frac{\tilde{P}(\omega)}{q^2}\, d\omega = F(M,Re) \tag{2}$$

If the nondimensional frequency $\frac{\omega\delta^*}{U}$ is introduced, equation (2) becomes

$$\int_0^\infty \frac{U}{\delta^*} \frac{\tilde{P}\left(\frac{\omega\delta^*}{U}\right)}{q^2}\, d\left(\frac{\omega\delta^*}{U}\right) = F(M,Re) \tag{3}$$

Considering the integrand it is clear that

$$\frac{U}{\delta^*} \frac{\tilde{P}\left(\frac{\omega\delta^*}{U}\right)}{q^2} = G\left(\frac{\omega\delta^*}{U},M,Re\right) \tag{4}$$

This means that when the power spectrum of the wall pressure is measured for widely differing values of the parameters mentioned above it should be possible to find the function G by experiment.

It was realized, however, that the nonuniform response of the transducer would introduce difficulties into any attempts to correlate the measured spectra. From reference 11, the output power spectrum of a linear system, a transducer for instance, is related to the input power spectrum as follows:

$$\text{Output power spectral density} = \frac{\text{Input power spectral density}}{(\text{Impedance of system})^2} \tag{5}$$

Unless the impedance of the transducer is independent of frequency, the output spectrum gives a distorted representation of the input spectrum. The similarity function G of equation (4) cannot be determined unless corrections are made for the transducer impedance.

A number of spectra were measured over a wide range of q, U, and δ^* to make possible a partial check of equation (4). It was found that the best correlation of data for some 20 spectra was obtained by simply dividing the power spectrum by q^2 and plotting it directly against the frequency. Figure 9 shows 6 representative spectra selected from the total of 20. The selection was made in such a way that the range of Mach and Reynolds numbers of the investigation is covered. The root-mean-square values of the pressure fluctuations divided by the dynamic pressure are shown for each of the spectra. An absolute calibration of the wave analyzer was not made for these measurements. Thus, the areas under the spectral density curves can only be compared with each other. The spectral density curves have all been normalized with respect to the maximum value of the spectral density obtained for Mach number 0.771. The data reported in figure 9 were taken with a reservoir pressure and temperature of 0.98 atmosphere and 85° F, respectively.

Referring again to equation (5) it can be seen that the output and input power spectra are proportional to each other (as would be true for any linear system). Thus figure 9 shows that the power spectrum of the transducer output is roughly proportional to q^2 at any given frequency. (For fig. 9, q^2 was varied by a factor of 100:1.) The fact that the spectra did not check equation (4) is interpreted as follows. At low frequencies the transducer has a large resonance peak. The output power spectra therefore cannot scale with U and δ^* as required by equation (4). Note also that the spectra are relatively flat above 10,000 cps again making it difficult to detect scaling.

Some evidence of scaling of the power spectra was obtained as shown in figure 10. The transducer output power spectrum was carefully measured at an upstream and downstream station in the pipe. For each case the sonic throat was not changed, only the transducer was moved. The spectra are typical of the results obtained and show, in each case, a marked increase in energy content at low frequencies when the boundary-layer displacement thickness was largest. It should also be noted that the spectra appear relatively flat though decreasing with frequency. It is interesting to return to the spectra taken immediately downstream of the trip (see fig. 8). In the nonequilibrium boundary layer immediately after tripping the energy is spread uniformly over a large frequency range at $M = 0.426$ and over a smaller range at $M = 0.197$. Apparently the larger scale structure which may be responsible for the low-frequency energy has not yet developed. Also any intermittent processes in the boundary-layer transition to turbulence that introduce large pressure peaks will contribute considerably to the spectrum at high frequencies. It does not seem possible to conclude anything further about these spectra at present.

Mean-Square Pressure Measurements

In the previous section it was shown that the transducer output power spectrum was approximately proportional to the dynamic pressure squared. More precise measurements of the mean-square wall pressure were made using a Hewlett-Packard root-mean-square vacuum-tube voltmeter which has a uniform response ±2 percent over the frequency range of interest $300 < f < 50,000$ cps. It is known that this instrument does not measure the true root-mean-square value of a random signal; however, the error is small and less than other errors that are possible.

Measurements of the root mean square of the wall pressure were made over a wide range of Mach number and Reynolds number. The ratio of the root mean square of the wall pressure to the dynamic pressure was found to be constant for the range $0.2 < M < 0.8$ and $1.5 < Re < 20 \times 10^6$.

The constant which is the function F of equation (1) was approximately evaluated by the assumption that the average transducer response is 1×10^{-6} v/dyne/cm^2. The basis for this assumption was obtained by estimating an average value from the calibration curve of figure 5. It is not possible to tell exactly what error is introduced by this value because the response above 15,000 cps is not known. Using this number, the points of figure 11 were plotted. It can be seen that the ratio $\frac{\sqrt{\overline{p^2}}}{q}$ is approximately constant and equal to 0.0035. It should be noted that another source of error is the finite size (3/16-inch diameter) of the transducer. An error will be introduced if the wall pressure fluctuations are not correlated over the entire transducer disk. In this case the transducer output will be low compared with the true value of the root-mean-square pressure at a point. The estimated error for these measurements is ±33 percent and is twice the maximum scatter of the points in figure 11; this is shown by the length of the vertical lines through each point. Measurements of the spatial correlation of the wall pressure with transducers of more uniform frequency response that are now being made will improve the accuracy of the measurements.

It was also found that no effect of the trip on the root-mean-square pressure could be detected when the Mach number was greater than 0.2 and the measuring station was 14 or more inches downstream of the trip. The root mean square of the wall pressure was approximately 30 percent greater immediately downstream of the trip than elsewhere in the boundary layer.

These results can be compared with an account of the measurement of aerodynamic noise on an airplane wing by Mull and Algranti (ref. 12). They report the measurement of the fluctuating wall pressure in a turbulent boundary layer over a speed range of $0.2 < M < 0.8$ and a

frequency range of $20 < f < 10{,}000$ cps at altitudes of 10,000, 20,000, and 30,000 feet. They found that the ratio of root-mean-square pressure to dynamic pressure decreased linearly up to Mach number 0.5 and was constant and equal to 0.0013 for higher Mach numbers. Mull and Algranti also present spectra taken at various altitudes with a 5-octave band analyzer. They do not draw any conclusions about their spectra. The cause of the decrease in $\sqrt{\overline{P^2}}/q$ with Mach number is not known. Their value for $\sqrt{\overline{P^2}}/q$ above $M = 0.5$ is lower than the present result. However, allowance should be made for the much smaller frequency range of their data, combined with the effects of scaling. (Their boundary layer thickness, 1.35 inches, was approximately twice the largest boundary layer thickness of the present tests. Thus, the frequency range from 0 to 10,000 cps should contain more energy than would be contained in that range for the present investigation.)

CONCLUSIONS

A low-noise- and low-turbulence-level wind tunnel and a flush-mounted barium titanate transducer have been used to measure the wall pressure fluctuations in a turbulent boundary layer. It has been found that:

1. Up to a Mach number of 0.43, the transducer responds only to the wall pressure fluctuations in the boundary layer covering the transducer. When the boundary layer is laminar over the transducer and turbulent within 1 diameter (3/16 inch) of the transducer the response is the same as it is for a layer completely laminar everywhere within 25 diameters of the transducer. This means that, up to a Mach number of 0.43, the wall pressure fluctuations are much larger than any sound generated by turbulence in the boundary layer without motion of the wall.

2. The spectrum of the wall pressure extends to 50 kilocycles. There are systematic changes in the spectrum at low frequencies, $f < 10$ kilocycles, when the Reynolds number is varied.

3. The ratio of the root-mean-square wall pressure to the free-stream dynamic pressure is a constant (0.0035) over a wide range of Mach and Reynolds numbers ($0.2 < M < 0.8$ and $1.5 < Re < 20 \times 10^6$). The

above root-mean-square wall pressure may be underestimated if the pressure fluctuations are not correlated over the complete diameter, 3/16 inch, of the transducer. Measurement of the correlation length is planned for the future.

California Institute of Technology,
Pasadena, Calif., May 28, 1956.

APPENDIX A

A DESCRIPTION OF THE LOW-NOISE- AND LOW-TURBULENCE-LEVEL FACILITY

Introduction

The problem of obtaining a high-speed flow of air at a low sound and turbulence level undoubtedly has many solutions. A desirable method, which was considered for the present design, is to use a blowdown type of system with large pressurized and/or evacuated tanks. With this method the noise from a compressor plant is not present when the stored air in the tanks is being used. Since rather complicated measurements have eventually to be performed, the intermittent type of tunnel has serious drawbacks. Furthermore, no large tanks were available at GALCIT for a blowdown-type system. It was thus decided to use the existing compressor plant of the GALCIT 4- × 10-inch transonic tunnel as an air supply in order to avoid excessive expense. The design problem was, however, considerably complicated because the high noise level of the centrifugal compressor plant had to be minimized before the air was used.

The complete system, as finally designed, is of the closed-return type, operating in parallel with the 4- × 10-inch transonic tunnel (see fig. 12). The system consists of a large-diameter pipe to conduct the air to the test area at low speeds and a smaller-diameter pipe connected to the compressor intake, which removes the air from the test area. The supply pipe can be fitted with various-sized contraction cones to provide closed or open jets of high-speed air. After use, the high-speed air is passed through a diffuser connected to the return piping.

The flow turbulence from the compressors is minimized by inserting fine mesh screens in the supply pipe. The noise from the compressors is minimized by lining the supply pipe with sound insulation material and by vibration isolation of the supply pipe. The supply pipe is 1/4-inch-thick steel, in order to shield the inside air from the ambient noise outside the pipe.

Aerodynamically generated noise is also created when the air flows in the compressors or piping. Little noise is created in the supply piping since the velocity is low. A considerable amount of aerodynamic noise is generated in the high-speed diffuser. In order to prevent the greater portion of this noise from reaching the test region, a sonic throat of variable cross-sectional area is inserted at the entrance of the diffuser. The variable-area throat regulates the speed of the air

flow and prevents the propagation of diffuser and compressor noise upstream to the test area. With the above general description in mind the design details can now be presented.

Design Details

Compressors.- The tunnel is powered by two Ingersoll-Rand type of "FS" motor blowers. These centrifugal compressors are connected in series and can supply 8,000 to 16,000 cu ft/min of air at a compression ratio of 1.4. The 4- × 10-inch transonic tunnel uses a maximum of 11,000 cu ft/min of air leaving a surplus capacity of approximately 5,000 cu ft/min for the present purpose.

Piping system.- Air is taken from the settling chamber of the transonic tunnel and returned to the intake of the compressors (see fig. 12). The pipe for this purpose was fabricated from 1/4-inch-thick steel plate, which is thick enough to provide approximately 40 decibels of acoustic shielding for the air inside the pipe. The pipe is of welded construction with three flanged connections. Rubber gaskets are used at the flanges and the flange bolts are padded with rubber washers in order to prevent metal contact and thus reduce sound transmission to the test area. In addition, all the piping is supported on 1/4-inch-thick rubber pads which provide considerable vibration isolation.

The size of the piping upstream of the test area is 22 inches inside diameter. Thus, the flow velocity is a maximum of approximately 31 ft/sec when 5,000 cu ft/min of air are flowing. The piping downstream of the sonic throat and diffuser is 15 inches inside diameter, and the velocity is higher, approximately 75 ft/sec.

The long supply pipe (see fig. 12) was necessary in order to provide a sufficient area of sound insulating material. Each corner is provided with turning vanes. The flow velocity is low in the supply pipe, so that the pressure drop is negligible.

No attempt was made to calculate the efficiency of the system since the compression ratio of the compressors is independent of volume flow and the present piping system is very similar to the 4- × 10-inch transonic-tunnel system.

Sound absorption and material.- The sound pressure level at the settling chamber of the 4- × 10-inch transonic tunnel is 119 decibels, (relative to 0.0002 dynes/cm^2) as measured by a General Radio sound level meter. The noise spectrum at that point was measured with a General Radio type 760 sound analyzer (fig. 13). The spectrum shows that the noise from the compressors is a maximum at 60 cps, which corresponds to the compressor rotation speed. In addition, the noise at high frequencies

from 100 to 6,000 cps is considerable. The above noise measurements were made with a crystal microphone whose frequency range extends to only 8,000 cps.

The noise level of 119 decibels had to be reduced considerably before a usable air supply would be obtained. For lack of better information, a noise level at the supply outlet of 40 decibels was selected as a specification for the sound insulation. This level is an average of 20 decibels above the threshold of hearing and would be inaudible except in very quiet locations.

After familiarization with the subject of noise reduction (the help of Dr. I. Rudnick of the Physics Department of the University of California at Los Angeles is gratefully acknowledged) it became apparent that it would not be economically feasible to lower the sound intensity at low frequencies to 40 decibels. A short explanation is as follows: Most sound-absorbing materials are made from porus, fibrous substances which abstract energy from the sound waves that impinge upon them. The energy is removed by the viscous heating of the air as it moves through the pores of the material and by the friction of the fibers of the material as they slide over one another. At high frequencies the velocity and pressure gradients in a sound wave are large (they are proportional to the frequency for a sine wave), and a thin layer of material is sufficient to abstract an appreciable fraction of the sound energy. At lower frequencies a thicker layer of sound insulation is required since the gradients are smaller. Finally, at low frequencies, of the order of 100 cps, ordinary sound insulation must be very thick in order to be effective.

The material selected for the lining of the supply pipe was glass-fiber blanket. An approximate computation, with the help of Dr. Rudnick, showed that a lining 3 inches thick would attenuate the noise in the 22-inch-inside-diameter supply pipe approximately 2.75 db/ft at frequencies above 300 cps. Thus, for a 35-foot pipe the sound attenuation to be expected is 96 decibels at frequencies above 300 cps. The actual sound attenuation should be greater than this since the turns in the pipe are advantageous in that they break up any beams of sound propagating along the pipe axis. It was necessary to include the four turns in the piping in order to accommodate the 35-foot length of pipe in the available space.

The sound-insulating material was Gustin Bacon "Ultralite," a glass-fiber blanket of 3 lb/cu ft density bonded together with thermosetting plastic resin. Glass-fiber blanket was chosen as the sound-insulating material because it is an efficient sound absorber, does not rot, is resistant to heat and cold, and is economical.

The pipe was lined with three 1-inch thicknesses of the glass-fiber blanket. The 1-inch thickness exposed to the air was obtained with a vinyl plastic spray coating on the inner surface. The coating binds the glass fibers together and prevents their entrainment by the air. In order to hold the lining in place and to provide an aerodynamic surface free of long-wave-length undulations, sheets of punched aluminum, 0.023 inch thick with 3/32-inch-diameter holes on 1/4-inch centers, were used as a covering material for the glass fiber. The material used is Navy specification metal covering for sound insulation and does not appreciably reduce the effectiveness of the glass-fiber blanket. The aluminum sheets were bent into a circle and expanded inside the pipe to hold the glass-fiber lining in place. Sheet-metal screws were used to fasten the aluminum sheets together.

Contraction section.- The end of the supply pipe is fitted with a $3\frac{1}{2}$-foot-long contraction section. This section was built up from laminations of glass-fiber cloth impregnated with a thermosetting resin and is 3/8 inch thick. The section inside diameter is 22 inches at the entrance and 4 inches at the exit. The section was made on a painted and polished wooden form, so that the inside surface is very smooth.

It is believed that the use of glass-fiber laminates (such as the present contraction section) for transition sections, test sections, or diffusers would be very satisfactory and economical. To date there has been no difficulty with the present section which has been operated, infrequently, at 60° C stagnation temperature.

Diffuser and sonic throat.- The diffuser is a simple conical section with a 3° half-angle expansion and a 4-inch-diameter entrance. The length chosen was 4 feet at which point there is an abrupt increase in area. The flow should separate at this point but not before. Thus, the separation point in the diffuser is fixed, giving a stable flow in the vicinity of the sonic throat at the diffuser entrance.

Performance

The following measurements of the performance of the facility have been made:

Sound absorption characteristics of lining in supply pipe.- In order to determine the amount of sound absorbed in the supply pipe the sound level and spectrum were measured at the entrance (point A of fig. 12) and near the exit (point B of fig. 12). The measurements were made with the compressor plant operating and with air flowing in the 4- × 10-inch transonic tunnel. The 4-inch-diameter end of the contraction cone was plugged up with rags in order to measure only the

noise propagating down the supply pipe or that transmitted through the 1/4-inch steel-pipe walls. The sound pressure level was 119 decibels (relative to 0.0002 dyne/cm^2) at point A and 108 decibels at point B. The sound spectrum at the above points is shown in figure 13. The measurements were made with a General Radio sound level meter, type 759, and sound analyzer, type 760, respectively. A crystal microphone, whose cutoff frequency was 8,000 cps, was used.

From figure 13 it is apparent that the sound insulation was quite effective above 250 cps and that the design calculations are verified.

Noise from diffuser.- The diffuser was very noisy. A test was made with the 4-inch-diameter end of the contraction section attached to the diffuser entrance and the ogival central body mounted in the diffuser entrance. As the butterfly valve downstream of the diffuser was opened the noise level in the room increased and then dropped sharply approximately 12 decibels when sonic flow was established over the central body. The noise level decreased slightly as the butterfly valve was opened further and then increased. Apparently, the minimum noise level was reached when the valve position was such that the supersonic flow downstream of the sonic throat did not separate from the diffuser walls.

The diffuser piping radiated considerable noise into the room. It has been completely enclosed with aluminum sheet metal and the space between the pipe and aluminum sheet metal filled with rock-wool insulation. The sonic throat was very effective since a decrease of 12 decibels means that a large fraction of the ambient noise in the test area was diffuser or compressor intake noise.

APPENDIX B

BARIUM TITANATE TRANSDUCER DESIGN AND TECHNIQUES

The transducer design was complicated by the requirement that the transducer be vibration isolated from the surrounding structure. In addition, a sensitive element flush with the surface was necessary in order that the flow in the boundary layer would not be disturbed. A solution to these problems was obtained by the system shown in figure 2.

Vibration isolation is obtained by mounting the sensitive element on a heavy brass body and stem which is suspended on a soft "O" ring made of silicone rubber. The natural frequency of the body on the "O" ring is below 300 cps. Very effective vibration isolation is obtained with this system. The transducer output when suspended on the "O" ring is approximately 1 percent of the output when the transducer is in contact with a given source of high-frequency vibration. In addition to vibration isolation, the "O" ring provides a seal against the pressure differential between the inside and outside of the pipe.

The sensitive element, a 3/16-inch-diameter × 0.100-inch-thick disk was cut from a large disk of prepolarized barium titanate (Brush Electronics Corporation, ceramic "B"). It was found that polarized barium titanate could be cut by a rotating thin-walled copper cylinder using a slurry of water and abrasive without destroying the initial polarization present in the material. The electroded surfaces were not damaged by this process.

The barium titanate disk is carried on a polystyrene bushing fastened to the end of a steel post which can be adjusted so that the sensitive element is flush with the pipe wall. The glue used to fasten the barium titanate disk to the polystyrene is a conductive silver paint (Micro-circuits Company, silver conductive paint, SC 12). The paint is also used to make an electrical connection with the center wire inside the post. Next, the sides of the disk and edge of the conductive paint joint were given a thin coat of polystyrene insulation (Amphenol Electronics Corporation, Polyweld "912"). When the insulation was dry a thin strip of conductive paint was applied over the insulation from the exposed electrode to the metal post. The post was grounded to shield the inner wire from stray electrical pickup.

APPENDIX C

PREAMPLIFIER DESIGN

A preamplifier was constructed for the transducer. The preamplifier was necessitated by the low signal level from the barium titanate disk, approximately 1×10^{-6} v/dyne/cm^2. The consideration affecting the design was primarily the necessity for a low residual noise level to keep the signal to noise level as high as possible. To this end tubes used in the preamplifier were specially designed to withstand vibration and shock. The response of these tubes to vibration and sound is very much less than that of conventional-type tubes. The preamplifier is battery powered, is suspended by rubber bands inside its case, and is connected to the transducer by special coaxial cable (Microdot Division, Felts, Corporation, coaxial "mini-noise" cable) that is insensitive to vibration.

The wiring diagram is shown in figure 3. The preamplifier includes an input and output cathode follower and a single stage of gain from the 5840 pentode. The method of grounding was found to be very important in preventing 60-cycle pickup. The entire system, preamplifier, batteries, and transducer, is shielded by containers connected by shielded cables; however, the system is grounded at one point in order to prevent circulating currents in the grounding system.

When attached to the transducer the noise level from the preamplifier is 4×10^{-6} volts for the frequency range $300 < f < 50{,}000$ cps. This low noise level enables the transducer to respond to a sound pressure level of the order of 90 decibels (relative to 0.0002 dyne/cm^2) with a ratio of signal to internal noise of 2:1. The frequency response of the preamplifier was checked and found uniform within ±2 percent over the range $30 < f < 50{,}000$ cps. The one-half power point (response down 30 percent) occurs at 100,000 cps. The input impedance of the cathode follower was measured and found to be approximately 280 megohms. The capacity of the transducer is 73×10^{-12} farads giving a time constant of 0.02 second. Thus, the preamplifier and transducer should be able to respond faithfully to frequencies as low as 50 cps.

APPENDIX D

CALIBRATION OF THE TRANSDUCER

There was a possibility that the transducer would respond to shear-stress fluctuations in addition to normal pressure fluctuations. The following tests were performed. One strand was discarded from a three-strand nylon thread, and the rough thread was glued to the surface of the barium titanate disk. The transducer output was noted when the string was pulled through the fingers when orientated at 90° (A) and 0° (B) to the disk surface as shown in the following sketch.

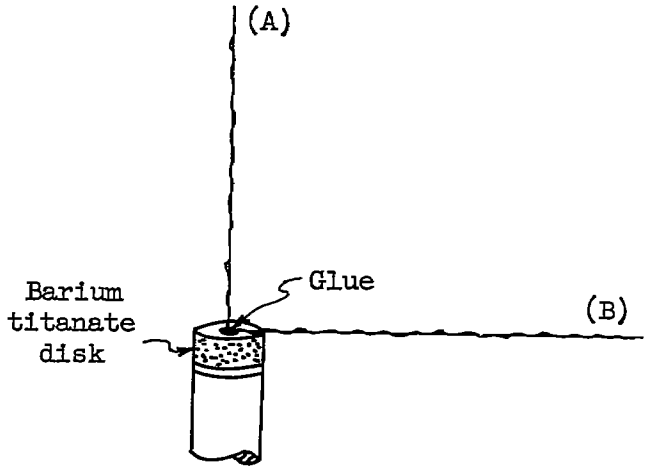

It was found that the output in position (B) was always 1/10 or less of the output in position (A). Thus, the transducer responds to normal and not shear stresses.

The normal pressure response of the transducer was checked in two ways. At frequencies below 15,000 cps a comparison calibration with a calibrated Altec 21-BR-150 condenser microphone was performed. This was done as follows. The transducer was mounted in the wall of the 4-inch-diameter pipe. At the same station a hole was drilled in the pipe and the condenser microphone was inserted flush with the wall. A sound field was set up in the pipe by a small 4-inch-diameter radio loudspeaker that was sealed to one end of the pipe about 3 feet from the transducer and microphone as shown in the following sketch.

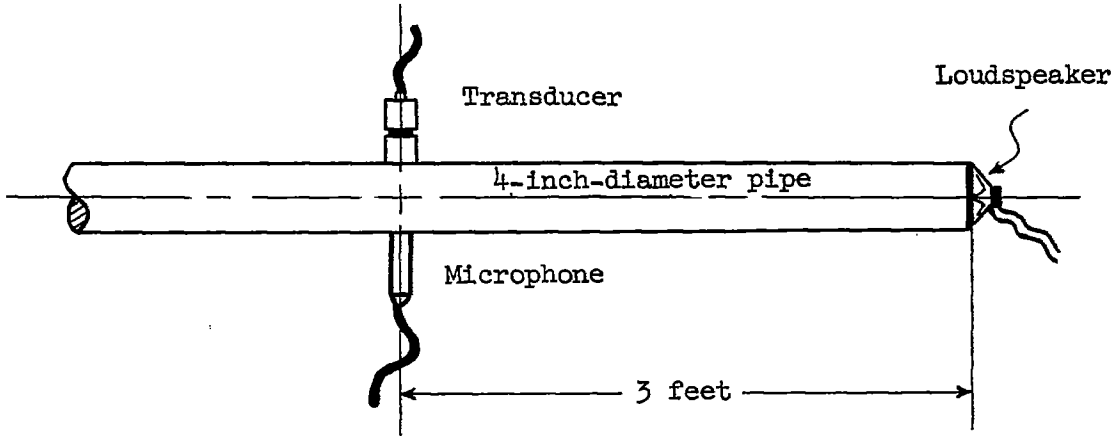

The loudspeaker was driven by an audio amplifier and oscillator. It was found that appreciable sound pressure could be obtained over the frequency range $300 < f < 15{,}000$ by carefully tuning the oscillator to give a maximum output from the loudspeaker. The maximum output was apparently caused by resonance of the loudspeaker diaphragm.

Initial tests showed that there was a very severe resonant peak in the transducer near 5,000 cps. Tests with a plastic film over the end of the transducer established that the annular gap around the transducer at the surface formed the "neck" of a Helmholtz resonator and that the trapped air around the transducer stem between the first "O" ring and the neck supplied the spring force or "stiffness" required to maintain the oscillation.

The spacing in the annular gap around the whole length of the transducer stem was reduced to approximately 0.005 inch and the fit of the 45° bevel on the stem was improved in an effort to add viscous air damping and thus reduce the resonance.

The transducer was then calibrated with the results shown in figure 5. The resonant peak was now at 6,000 cps and the amplitude was very much reduced from the initial value.

A calibrated microphone for frequencies above 15,000 cps was not available. However, a qualitative assessment of the transducer response for high frequencies, up to approximately 100,000 cps, was obtained by exposing the transducer to the sound field from a small supersonic air jet. The response was detected by a Sierra wave analyzer (Sierra Electronic Corporation, model 121, 15 to 500 kilocycles).

Initially the transducer response showed three resonant peaks at 22, 33, and 65 kilocycles. It was found that the peaks at 22 and 33 kilocycles could be damped by supporting the transducer stem with resilient material. Fiberglas blanket was tried first. However, similar effects were obtained by adding more "O" rings to support the stem. This is the reason for the four silicone rubber "O" rings shown in figure 2.

It was not possible to remove the resonance at 65 kilocycles, although the magnitude of this resonance was considerably reduced by the "O" rings. This resonant peak may be caused by the extensional mode of the transducer stem. For instance, the speed of sound in brass is approximately 11,000 ft/sec. A brass rod of the length of the stem (approximately 1 inch) has a fundamental vibration mode at 66,000 cps.

It was found that the energy content of the turbulent-boundary-layer pressure fluctuations above 50 kilocycles was relatively small; therefore, measurements are not reported above 50 kilocycles. Figure 6 shows the results of the spectrum measurements of a small air jet with the transducer in its final form. The response is free from extreme peaks. The rise in output at high frequencies is caused by the air-jet sound field.

REFERENCES

1. Phillips, O. M.: Surface Noise From a Plane Turbulent Boundary Layer. British A.R.C., Rep. No. 16,963/F.M.2099, Aug. 4, 1954.

2. Curle, N.: The Influence of Solid Boundaries Upon Aerodynamic Sound. Proc. Roy. Soc. (London), ser. A, vol. 231, no. 1187, Sept. 20, 1955.

3. Phillips, O. M.: On the Aerodynamic Surface Sound From a Plane Turbulent Boundary Layer. Proc. Roy. Soc. (London), ser. A, vol. 234, no. 1198, Feb. 21, 1956, pp. 327-335.

4. Miller, M. M., and Calkins, James E.: Noise and Jet Transports - A Partial Discussion. Noise Control, vol. 1, no. 2, Mar. 1955, p. 59.

5. Kraichnan, Robert H.: Pressure Field Within Homogeneous Anisotropic Turbulence. Jour. Acous. Soc. of America, vol. 28, no. 1, Jan. 1956, pp. 64-72.

6. Corcos, G. M., and Liepmann, H. W.: On the Transmission Through a Fuselage Wall of Boundary Layer Noise. Rep. No. SM-19570, Douglas Aircraft Co., Inc., Dec. 1955.

7. Ribner, H. S.: Boundary-Layer-Induced Noise in the Interior of Aircraft. UTIA Rep. No. 37, Univ. of Toronto, Inst. of Aerophysics, Apr. 1956.

8. Willmarth, William W.: A Description of the Design of a High Speed, Low Noise and Turbulence Level Air Supply. GALCIT Prog. Rep. (NACA Contract NAw-6359), Jan. 1955.

9. Mitchner, Morton: Propagation of Turbulence From an Instantaneous Point Disturbance. Jour. Aero. Sci. (Readers' Forum), vol. 21, no. 5, May 1954, pp. 350-351.

10. Liepmann, H. W.: Parameters for Use in Buffeting Flight Tests. Rep. No. SM-14631, Douglas Aircraft Co., Inc., Jan. 3, 1953.

11. James, Hubert M., Nichols, Nathaniel B., and Phillips, Ralph S.: Theory of Servomechanisms. McGraw-Hill Book Co., Inc., 1947, p. 288.

12. Mull, Harold R., and Algranti, Joseph S.: Preliminary Flight Survey of Aerodynamic Noise on an Airplane Wing. NACA RM E55K07, 1956.

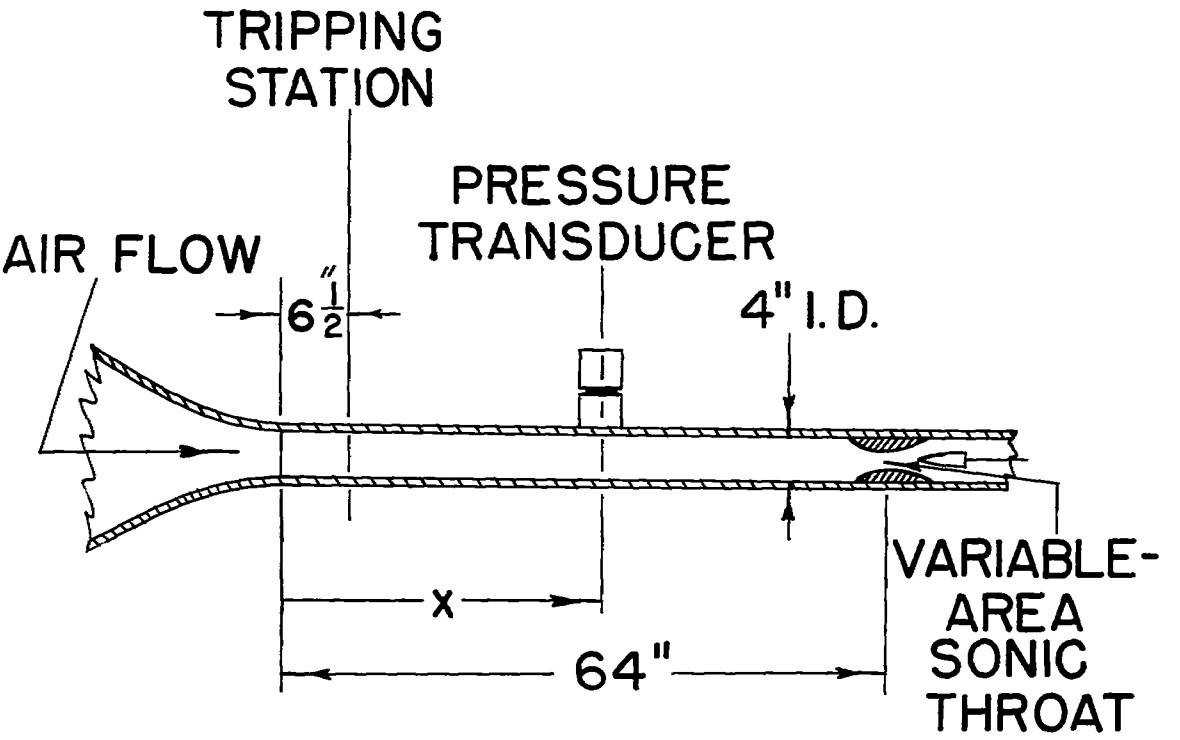

Figure 1.- Sketch of pipe test section.

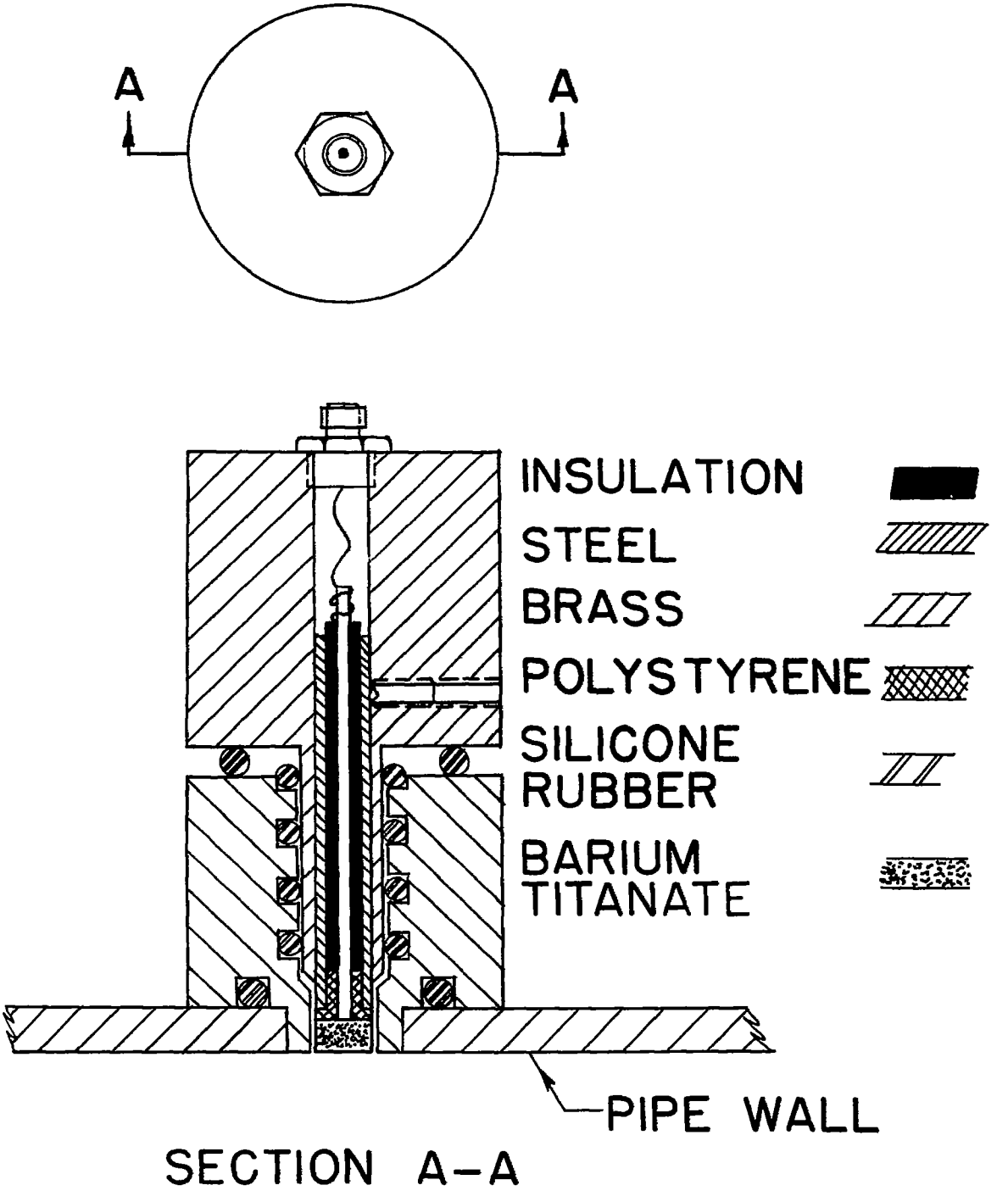

Figure 2.- Sketch of pressure transducer. Scale is twice full size.

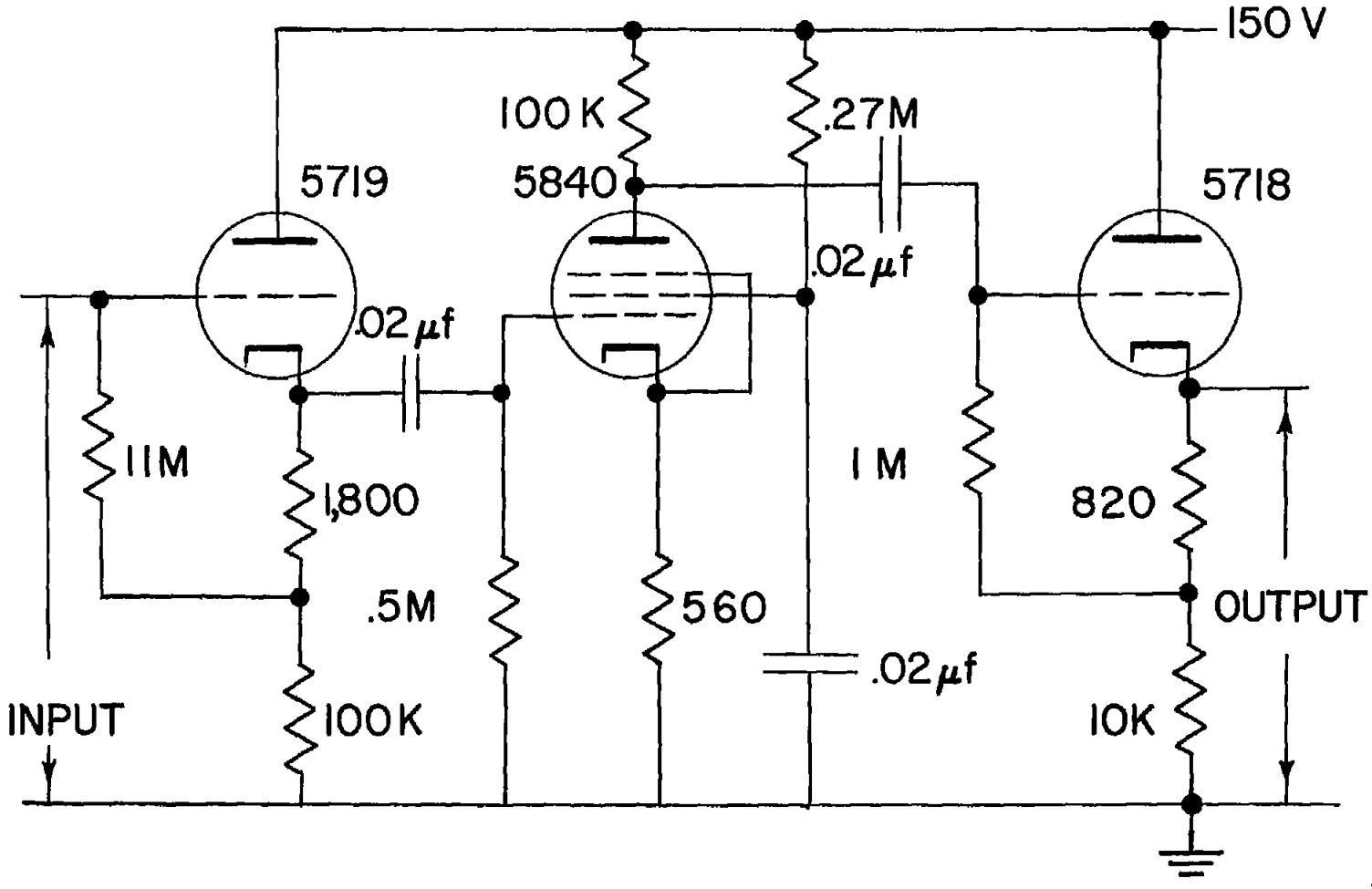

Figure 3.- Preamplifier. Battery powered; gain 50:1. (All resistances are in ohms; K = 1,000 ohms; M = 1,000,000 ohms.)

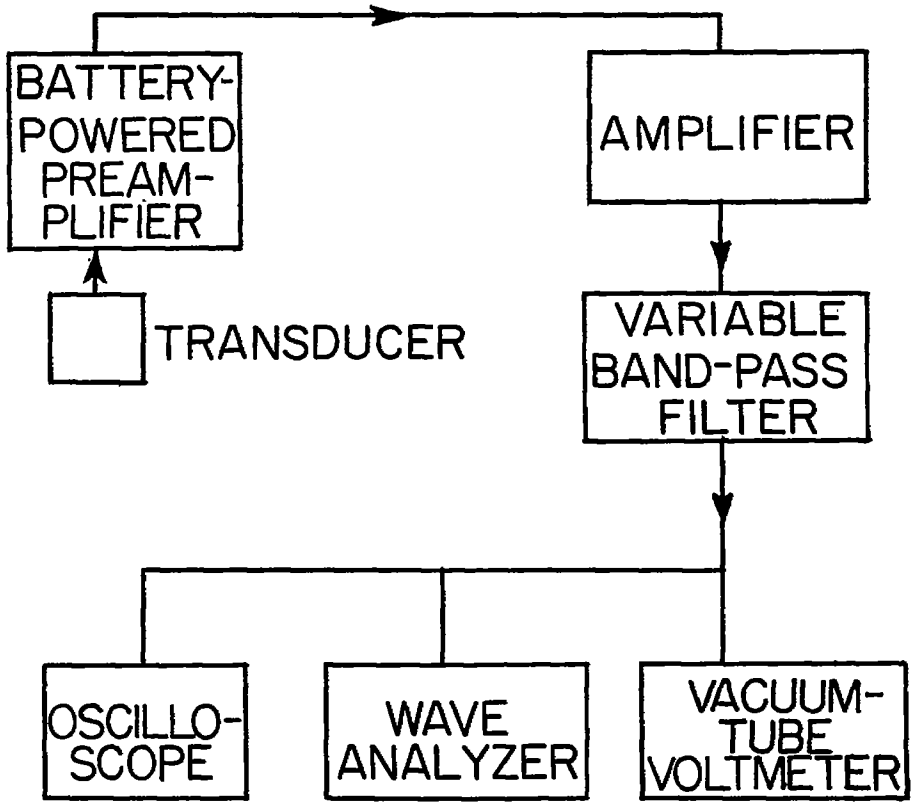

Figure 4.- Block diagram of electronic equipment.

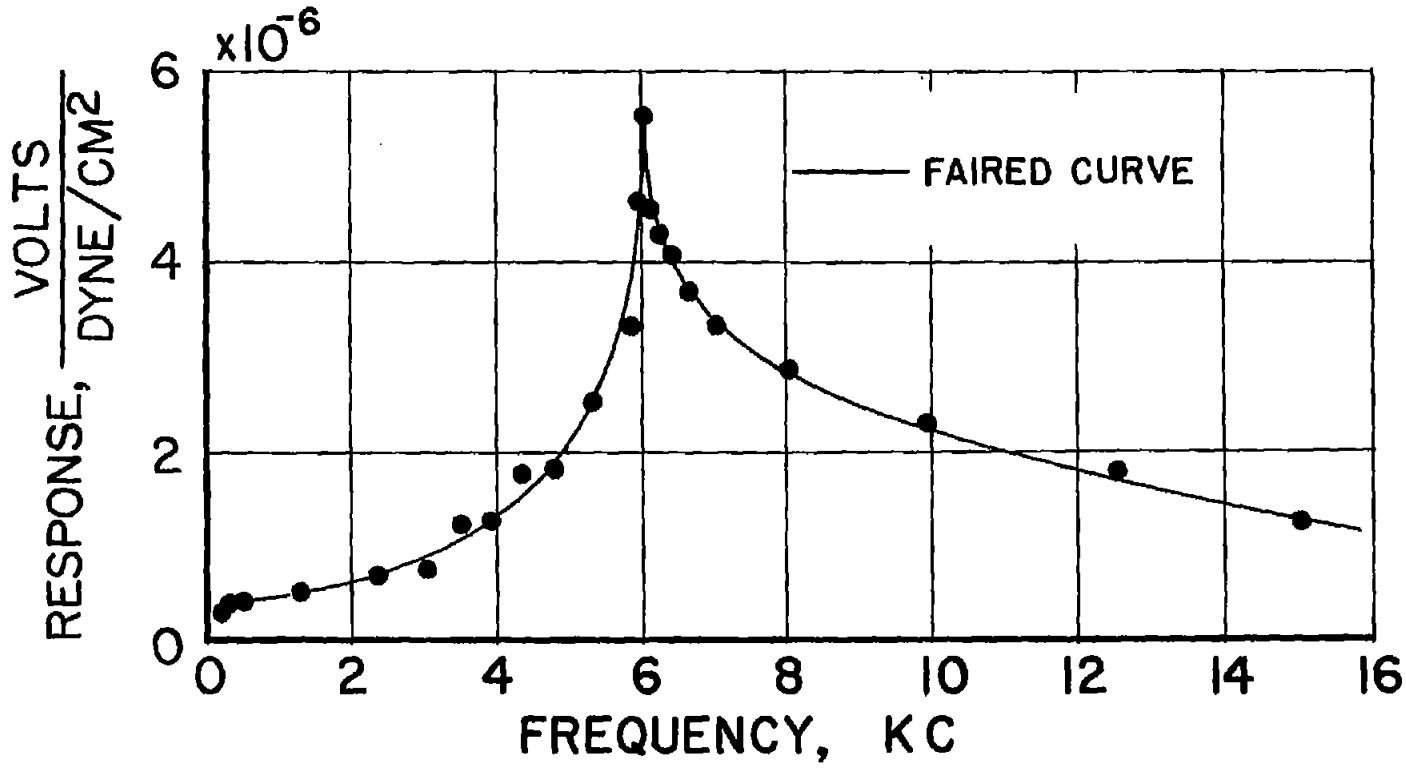

Figure 5.- Comparison calibration of transducer against Altec 21-BR-150 microphone.

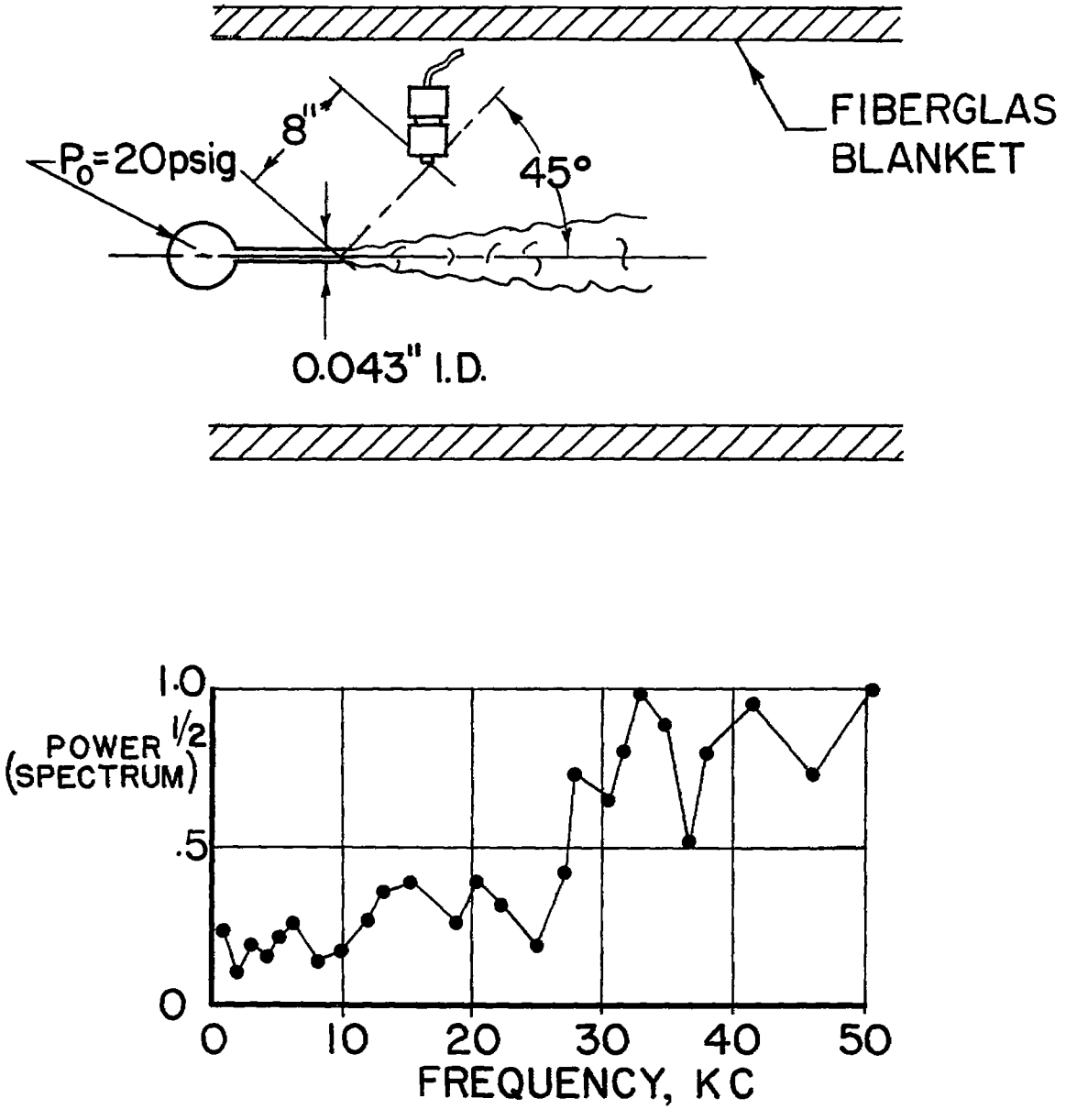

Figure 6.- Transducer response to sound field from a small air jet.

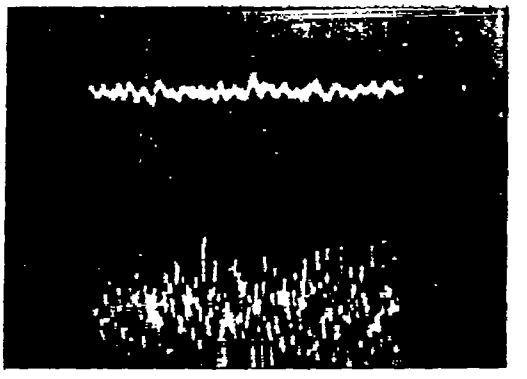

L-57-4224

Figure 7.- Oscillograph record of transducer output voltage with laminar boundary layer (upper photograph) and output voltage after tripping the boundary layer (lower photograph). $M_\infty = 0.35$; $\delta^* = 0.025$ inch approximately; $Re = 1.5 \times 10^6$.

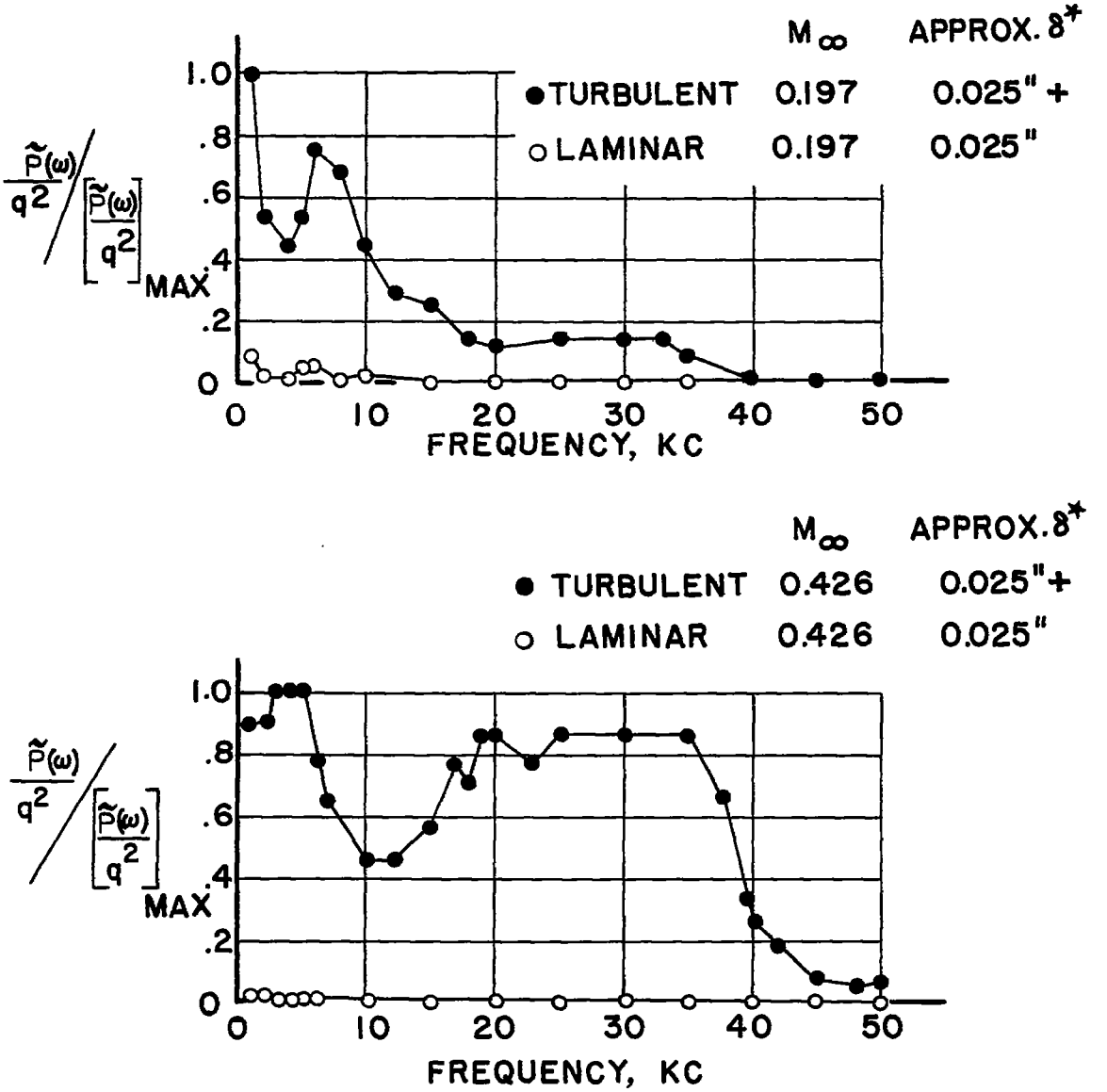

Figure 8.- Effect of boundary-layer tripping on power spectrum of fluctuating pressure.

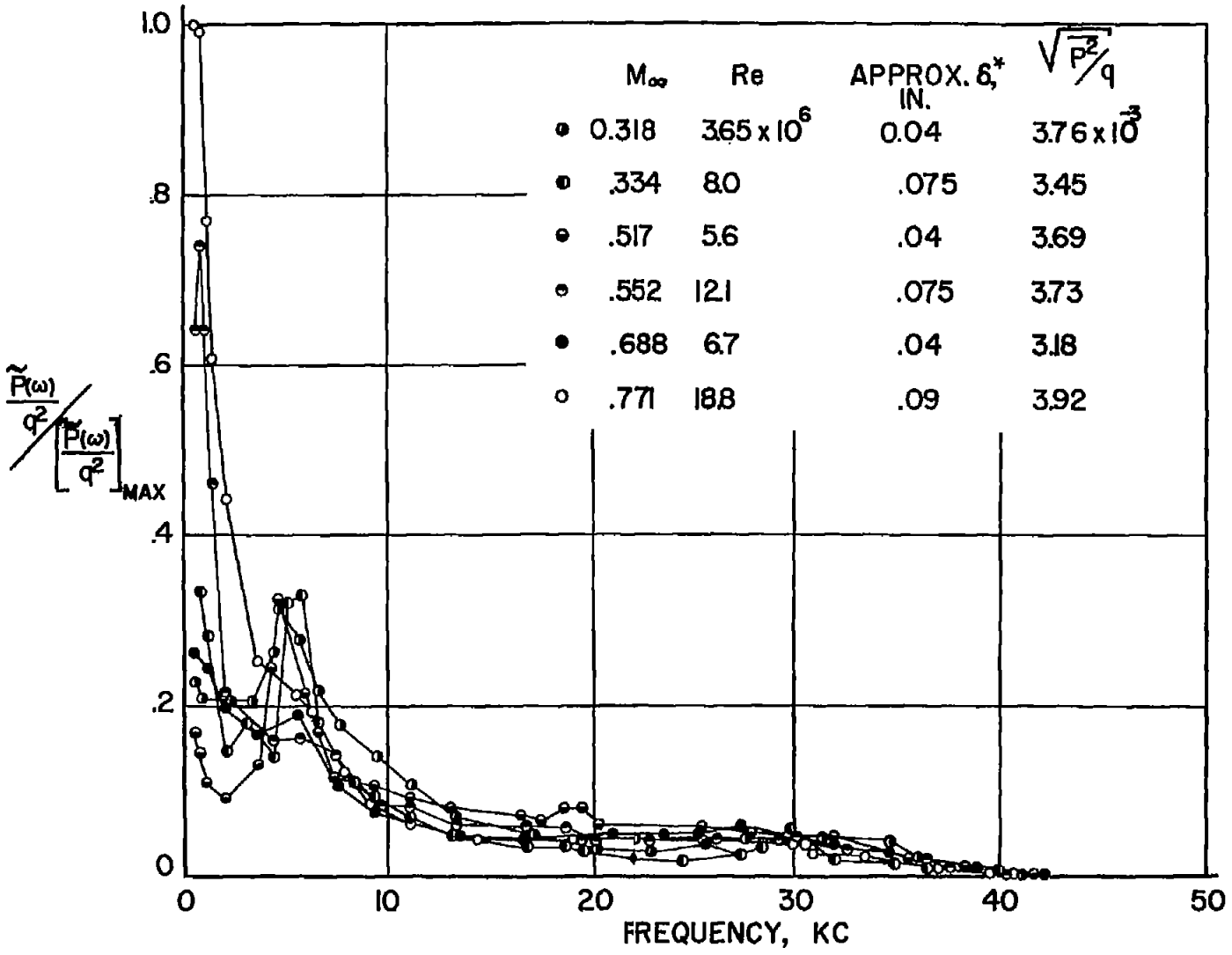

Figure 9.- Typical power spectra of fluctuating pressure.

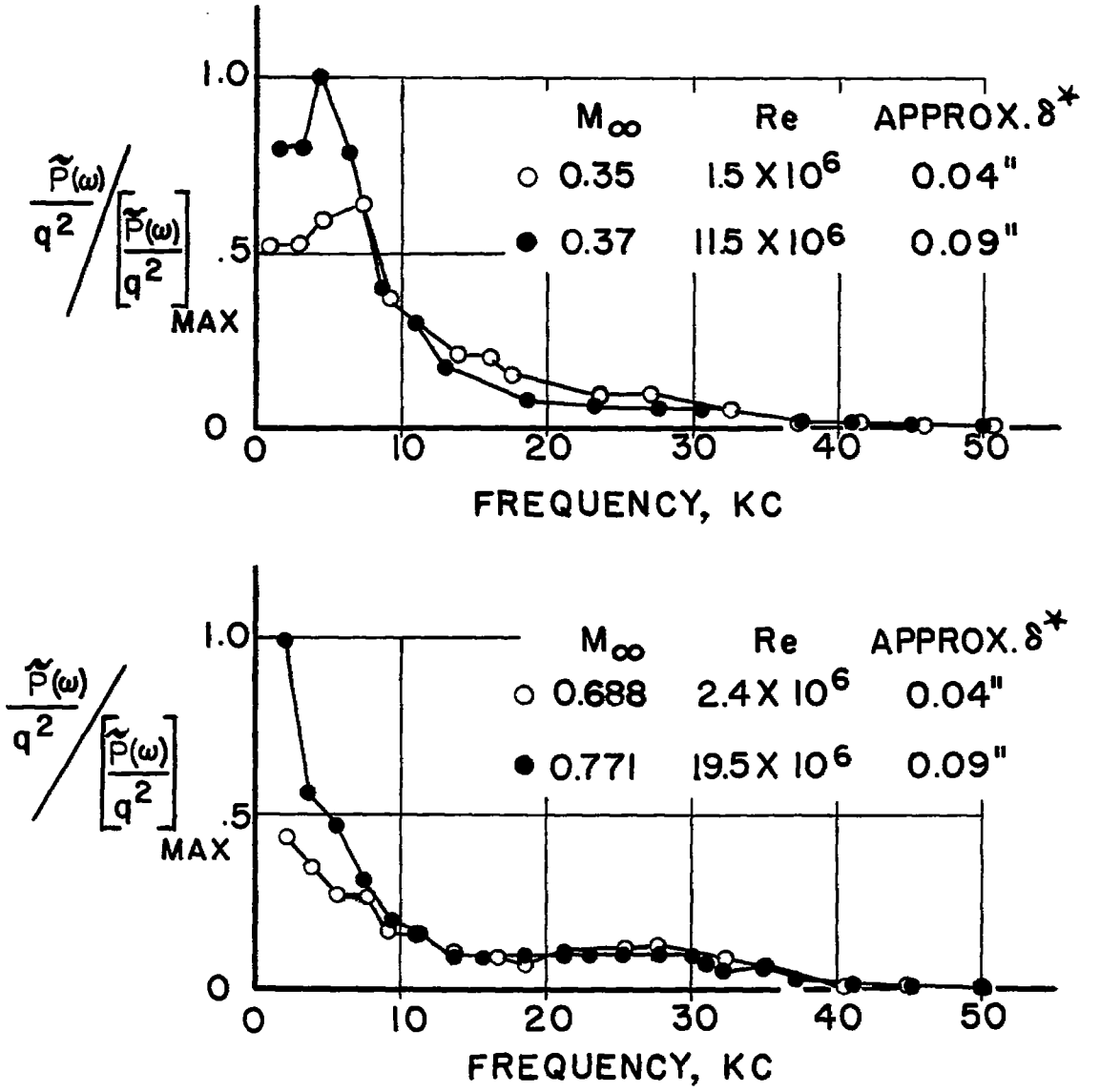

Figure 10.- Effect of boundary-layer displacement thickness on power spectrum of fluctuating pressure.

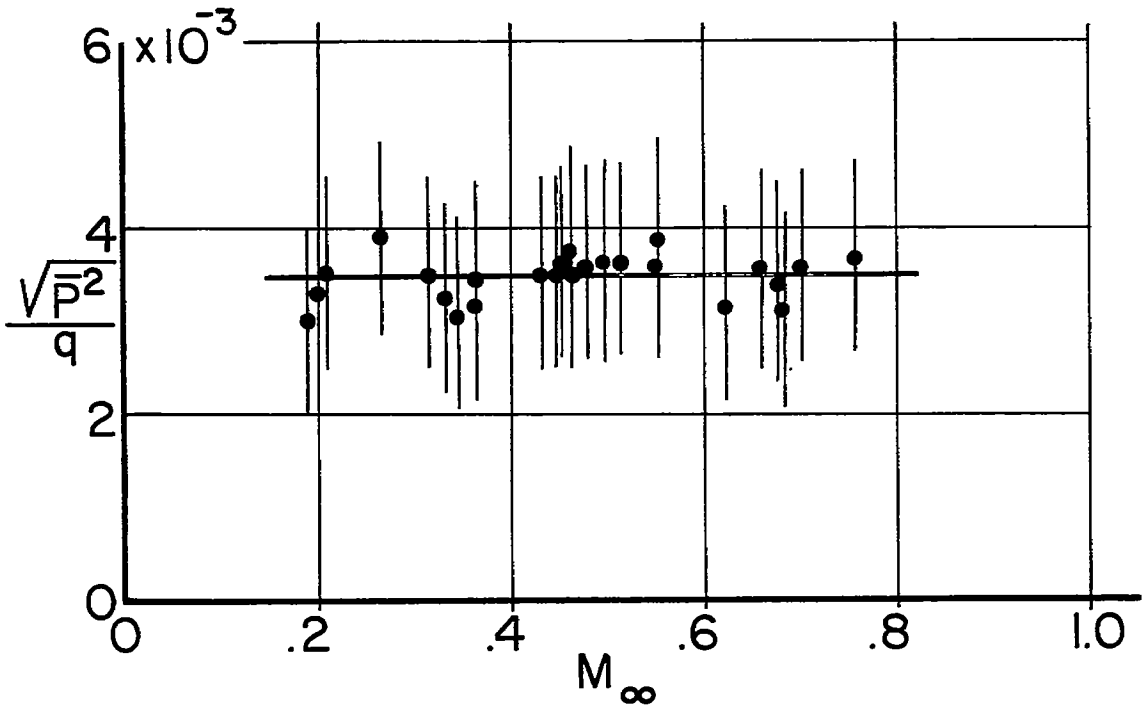

Figure 11.- Ratio of root-mean-square wall pressure to dynamic pressure as a function of Mach number. Frequency range $0.3 < f < 50$kc; Reynolds number $1.5 < Re < 20 \times 10^6$.

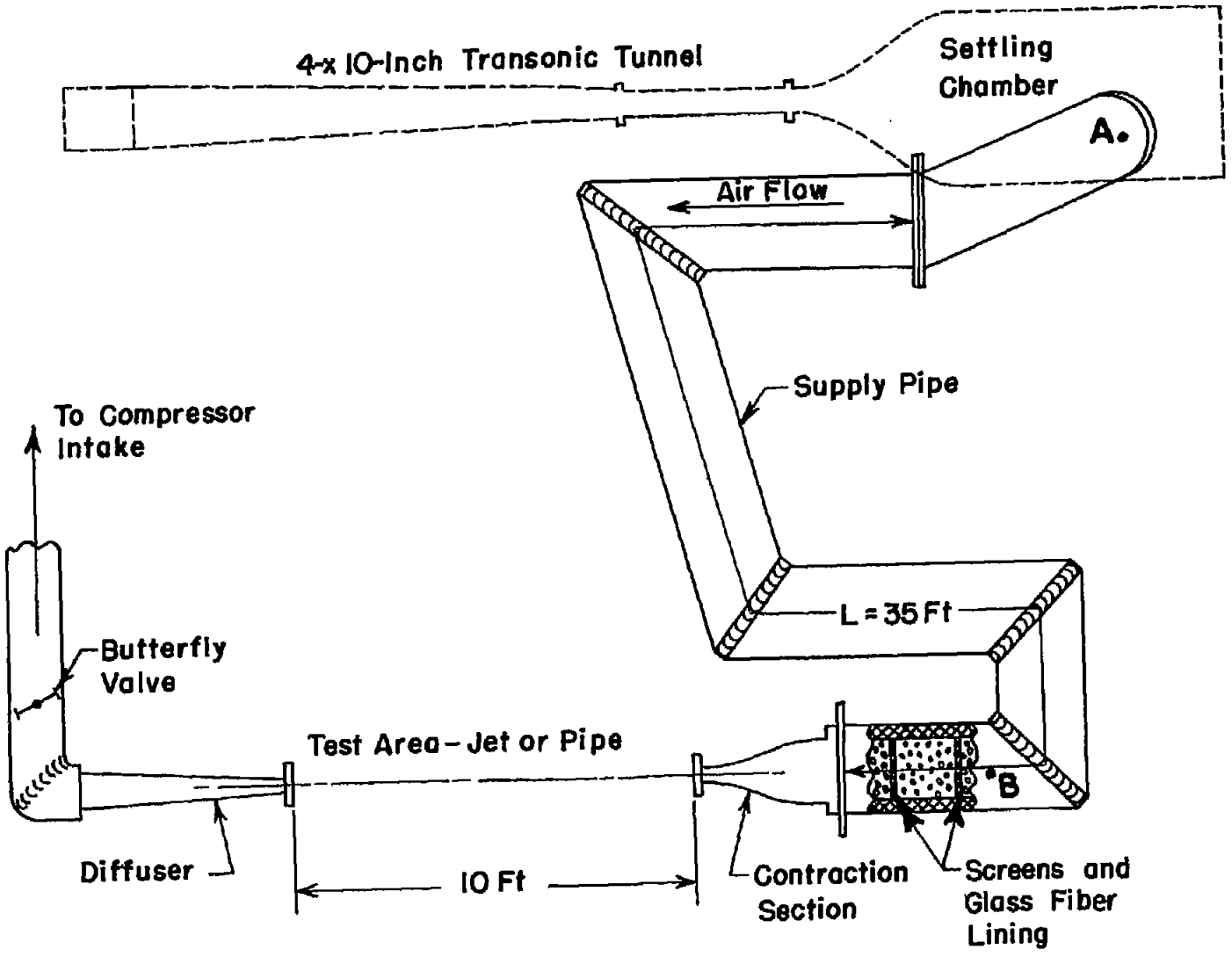

Figure 12.- Flow diagram. Scale: 1 inch = 4 feet.

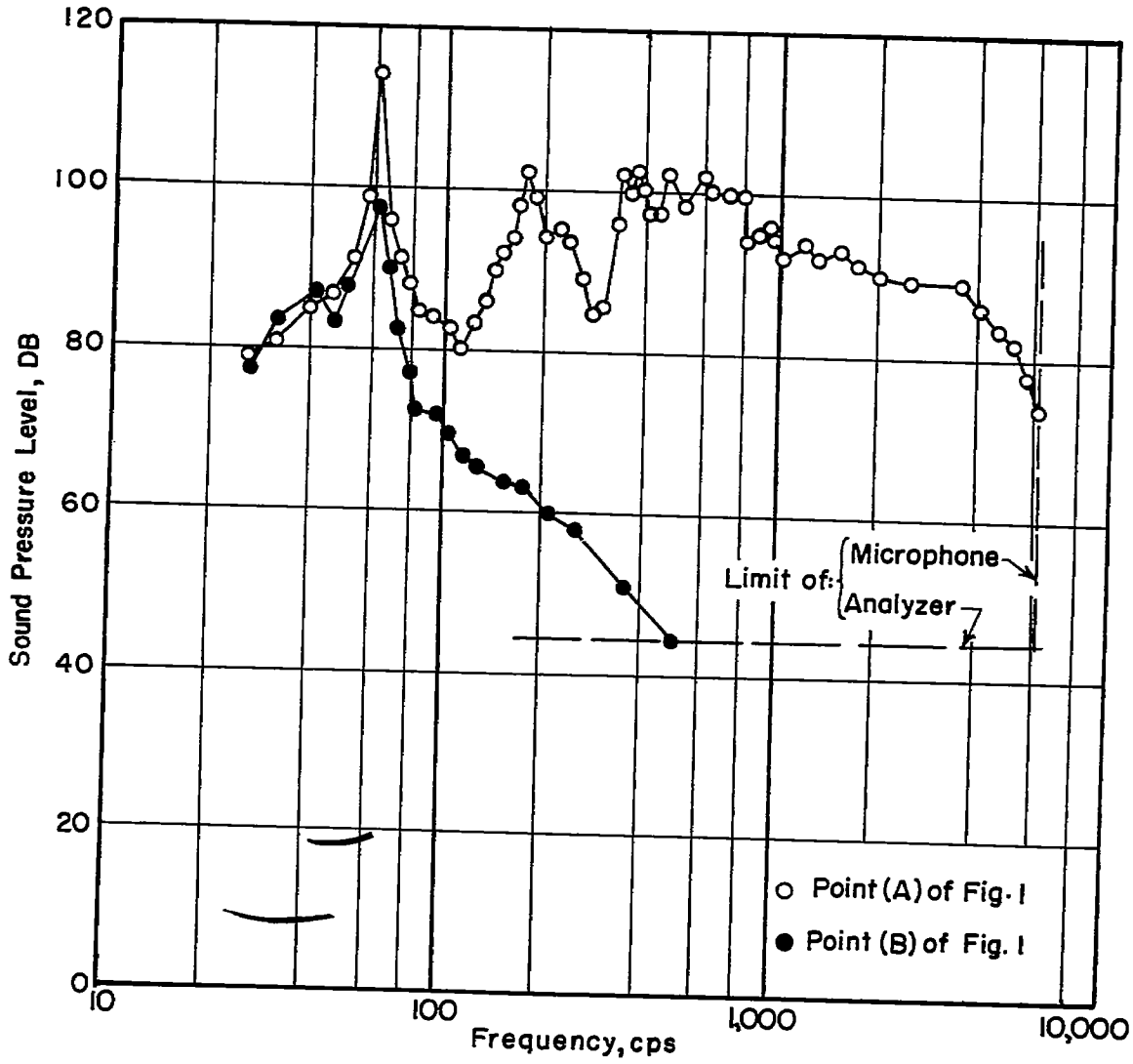

Figure 13.- Sound pressure spectrum in supply pipe.