10545
NACA TN 4206

TECH LIBRARY KAFB, NM
0068831

NATIONAL ADVISORY COMMITTEE FOR AERONAUTICS

TECHNICAL NOTE 4206

MEASUREMENTS OF TOTAL HEMISPHERICAL EMISSIVITY OF VARIOUS OXIDIZED METALS AT HIGH TEMPERATURE

By William R. Wade

Langley Aeronautical Laboratory
Langley Field, Va.

Washington
March 1958

AFMDC

TECH LIBRARY KAFB, NM
0066831

3

NATIONAL ADVISORY COMMITTEE FOR AERONAUTICS

TECHNICAL NOTE 4206

MEASUREMENTS OF TOTAL HEMISPHERICAL EMISSIVITY OF VARIOUS OXIDIZED METALS AT HIGH TEMPERATURE

By William R. Wade

SUMMARY

The results of measurements of total hemispherical emissivity at high temperatures for various metals are presented, together with a limited description of the equipment and procedures used. The metals included are stainless steel (AISI 303), mild steel (AISI C1020), titanium (TMCA Ti-75A), titanium alloy (RS-120), copper, aluminum (AA 3003), molybdenum, and tantalum.

The variation of total hemispherical emissivity due to oxidation of the metal was determined for the highest temperature which would produce an adherent oxide coating of stable emissivity. It was found that at a given temperature the emissivity increases as the exposure time at this temperature increases until a stable value is reached.

Deviation of the thermal radiation from Lambert's cosine law of diffuse emission was investigated, and values of total hemispherical emissivity were obtained for specimens possessing a surface of stable emissivity.

INTRODUCTION

This investigation of the total hemispherical emissivity of various materials is part of a general research program on aerodynamic heating of supersonic and hypersonic aircraft. The heat transfer by radiation from the surface of such vehicles becomes a significant part of the total heat transfer when the surface temperature is high, or when the forced convective heat transfer is low, as at high altitudes.

Inasmuch as radiative heat transfer is an important method of cooling under such conditions, a knowledge of the total hemispherical emissivity of the surface is required when any theoretical calculations

involving radiant heat are to be made. Furthermore, the evaluation of experimental data for forced convective heat transfer under conditions of simultaneous radiative heat transfer, obtained by use of hypersonic research vehicles, necessitates precise knowledge of the emissivity of the surface for evaluation of the radiative portion. This knowledge is very limited for most materials, and measurements of emissivity for a stable oxidized surface are practically nonexistent.

The first report on this investigation (ref. 1) covers the theory, design, and calibration of the equipment, and the procedures used to measure total hemispherical emissivity of materials with surfaces of stable emissivity. This report covers results, not included in the first report, obtained for various stably oxidized metals.

DEFINITIONS AND SYMBOLS

Total emissivity - the total radiation of all wavelengths emitted from a surface

Total normal emissivity - total emissivity measured in a direction normal to the surface

Total hemispherical emissivity - total emissivity measured in all directions from the surface over the entire solid angle of a hemisphere.

f_u radiant flux from a surface of unknown emissivity at an angle $\phi \neq 0$

$f_{u,0}$ radiant flux from a surface of unknown emissivity at an angle $\phi = 0$

ϕ angle of incidence measured from the normal

APPARATUS

The theory, design, and operation of the apparatus used for measurement of total hemispherical emissivity are described fully in reference 1. Therefore, only a brief summary is presented herein.

The apparatus used for these measurements was designed to obtain values of total hemispherical emissivity for various materials treated to obtain a stable emissivity. An overall view of the test equipment is shown in figure 1 with the component parts identified. A standard commercial total-radiation pyrometer together with a precision

potentiometer was used as a sensing and measuring element to indicate the radiant flux intensity of a radiating body. This pyrometer consists of a lens system for focusing the radiation from a 0.62-inch-diameter area onto a thermopile of 10 pairs of thermocouple junctions, the hot junctions of which are flattened and blackened for maximum absorption of incident radiation. A water-cooled shield and shutter arrangement (fig. 2) was used with the pyrometer to control the radiation reaching the thermopile and to limit the temperature rise of the thermopile housing.

The specimen rig and electrical source for heating the test specimen are shown in figure 3. The specimen rig was designed to hold the test specimen in a vertical position while being viewed by the pyrometer. Provisions were made in this rig for free expansion of the test specimen in a longitudinal direction to prevent buckling of the strip at high temperatures.

The pyrometer was attached to the specimen rig by means of a pivoted arm as shown in figure 2. This allows the pyrometer to be rotated about the horizontal axis of the strip for measurements of relative flux intensity at various angles of incidence as a method of measuring total hemispherical emissivity.

The black-body target was a 6-inch Inconel cone (fig. 4), highly oxidized, with a total apex angle of 8.6° and a 1-inch-diameter opening. This cone was heated by an electrically heated tube-type furnace commonly used for gas analysis. The black-body furnace and the pyrometer set for viewing the black body are shown in figure 5.

Temperatures of the test specimen and the black-body target were measured by means of small thermocouples attached to the surface. The temperatures were indicated by a self-balancing potentiometer calibrated to read in degrees Fahrenheit.

ACCURACY

The close agreement between observed values of total hemispherical emissivity for several identical test specimens indicates that random errors do not exceed 2 percent. Therefore, the values reported herein are average values for the several test specimens. A systematic error may also be present because the reference black body used may actually depart from black-body radiation.

A recently published report (ref. 2) indicates that a conical black body, when equipped with aperture-limiting baffles, possesses a greater emissivity than either a cylinder or a sphere of similar dimensions.

This report also states that the emissivity is nearly independent of the surface condition of the inner walls and actually increases slightly for a smooth inner wall. In reference 2 a calculated emissivity of 0.9996 is given for a 15° cone having a ratio of "depth" to "radius of limiting aperture" of 20 and a fairly rough surface. Comparable spheres and cylinders have calculated values of emissivity of 0.9980 and 0.9970, respectively.

In view of the preceding statements it is felt that any errors in the values of emissivity recorded here, due to the error of the black-body radiation, are well within engineering accuracy.

PROCEDURE

It was found that the most convenient procedure for these tests was to measure the relative flux intensities produced by the black body over the entire temperature range, rather than to view the black body and test strips alternately. The thermopile was then considered calibrated and only an occasional check was necessary to determine any deviation from these values. The use of the calibration curve (fig. 6) is discussed in reference 1. It enables the total emissivity to be obtained at any temperature from the ratio of the relative flux intensities of the test specimen and the black body.

Values of total hemispherical emissivity were obtained by measuring the relative flux intensities at various angles of incidence over the temperature range of the test specimen. These values were then corrected for the increase of viewed area, and the corrected values were checked to determine any deviation from Lambert's cosine law for diffuse emission. Materials which obey this law will possess a total hemispherical emissivity equal to the total normal value of emissivity. If a deviation from this law is indicated, the values of total hemispherical emissivity must be calculated by the use of the double-integral method as discussed in reference 1.

In this investigation it was desirable to obtain a surface condition on the test specimen that would have a stable value of emissivity over the temperature range investigated. "Stable emissivity" as used herein is defined as a value of emissivity, at a particular temperature, which does not change appreciably during long exposure at temperatures up to the maximum oxidation temperature.

A preliminary investigation was conducted with clean metal strips which were polished to a smoothness of 10 to 15 microinches. These strips were heated in still air at various oxidation temperatures. This

heating resulted in the formation of an oxide coating on the surface of the pure metal which altered the emissivity of the strips as the coating thickness increased (ref. 3).

To obtain a stable emissivity it was necessary to produce an oxide coating thick enough to prevent radiation from the underlying pure metal. This thickness was prescribed by the temperature range over which the stable emissivity was required. When this thickness was achieved the surface coating behaved like the massive oxide (ref. 3).

Another important criterion for these test strips was the adherence of the oxidized coating for rapid heating and cooling. Cooling at intervals during the preliminary tests serves as a check on the adherence of the coating being produced.

After preliminary tests were made to determine the optimum oxidation temperature, polished specimens were oxidized at this temperature until a stable emissivity was obtained. Curves showing the results of these tests indicate that considerable oxidation occurred as the specimen temperature was raised from room temperature to the oxidation temperature. (See, for example, fig. 8.) Time zero, as shown on these curves, was the time at which the specimen reached the desired oxidation temperature; further oxidation times were measured from this point. All further tests, such as measurements of total normal emissivity and the investigation of the deviation of the radiant flux from Lambert's cosine law, were made on test specimens stably oxidized in this manner.

RESULTS AND DISCUSSION

The data shown for each of the materials tested are the average for a number of identical specimens, the scatter being within 2 percent. Measurements made on stainless steel (AISI 303), mild steel (AISI C1020), and titanium alloy (RS-120) show that when these materials were oxidized at a given temperature for the length of time necessary to produce a stable emissivity, the total normal emissivity was essentially independent of any prior oxidation at lower oxidation temperatures.

Stainless Steel (AISI 303)

The results of preliminary tests on stainless steel (AISI 303) are shown in figure 7. These time histories of oxidation temperature and emissivity indicate that the oxidation temperature has a definite effect on the value of total emissivity. The curves of emissivity approach a constant value for each temperature of oxidation. The highest stable value of emissivity for these tests was attained by oxidation at 2,000° F.

From these results it was determined that the oxidation temperature for the test specimens should be 2,000° F. Therefore, brightly polished specimens were heated at this temperature until stability was obtained. The variation of emissivity with time at this temperature is shown in figure 8.

After oxidation at 2,000° F for 60 minutes, the total normal emissivity of the specimen was measured over the temperature range of 600° to 2,000° F. In figure 9, where the circle indicates Lambert's cosine law for diffuse emission, the test points at various temperatures and angles of incidence are indicated. The adherence to Lambert's cosine law of the emission of these stably oxidized specimens is illustrated in figure 9; therefore, the total hemispherical emissivity may be taken as the values of total normal emissivity, as discussed in reference 1. These values are shown on figure 10.

Mild Steel (AISI C1020)

The results of the preliminary investigation on mild steel (AISI C1020) are shown in figure 11 as time histories of oxidation temperature and emissivity. The indicated decreases of emissivity with increases of oxidation temperature may be due to many factors, among which are the various oxides formed by pure iron. Information on the oxide formation on iron indicates that when iron is heated in air at temperatures above 1,000° F three different oxides will be present. The outer layer will be composed of Fe_2O_3, the intermediate layer of Fe_3O_4, and the inner layer of FeO. These oxide layers will vary in thickness, the thickest being FeO (ref. 4). Other factors which may affect emissivity are the absorption of water vapor by Fe_2O_3, the combination of iron with nitrogen, the dissociation of various oxides or nitrides, and the oxidation of the various other elements present in mild steel, such as chromium, silicon, and copper (ref. 4). These factors, together with the fact that the chemical composition of mild steel may vary greatly, indicate that the values of emissivity reported here apply only to the specific test specimens and may differ for other samples. Heating of this material at temperatures higher than 1,500° F for a period of time necessary to achieve stable emissivity resulted in formation of gas bubbles near the surface. These bubbles eventually ruptured, destroying the oxidized surface and changing the emissivity considerably.

After preliminary tests were made, brightly polished test specimens were heated in air at 1,500° F to determine the time necessary at this temperature to produce a surface oxide of stable emissivity. The curve of figure 12 shows the variation of emissivity with time at this temperature. This curve indicates a decrease of emissivity until a constant value is reached after approximately 30 minutes at 1,500° F.

Measurements of total normal emissivity were made on specimens oxidized at 1,500° F for 30 minutes or longer to insure a stable surface condition. An investigation was then made to determine any deviation of the thermal radiation of these specimens from Lambert's cosine law of diffuse emission. The results of this test are shown in figure 13, where the circle illustrates Lambert's cosine law and the test points are indicated. These observations indicate a deviation from this law by mild steel at angles of incidence greater than 45°. Therefore, the values of total hemispherical emissivity must be calculated by the integral method of reference 1.

Figure 14 shows the measured values of total normal emissivity, as well as the calculated values of total hemispherical emissivity, over the useful temperature range of this material and illustrates the effect of nondiffuse emissivity.

Titanium Alloy (RS-120)

The results of preliminary tests made on titanium alloy (RS-120) to determine oxidation time and temperature for stable emissivity are shown in figure 15. These curves indicate that the surface condition obtained at each oxidation temperature reaches a value of stable emissivity after oxidation for a certain period of time. The abrupt drop of emissivity at 1,400° F and the succeeding slow increase are in the temperature region where nitrogen was being absorbed (ref. 5). Several specimens were tested and all showed similar decreases of emissivity in this region. The exact cause of this decrease was undetermined, but the absorption of nitrogen probably has some effect.

During preliminary investigations it was observed that the highest oxidation temperature that would produce an adherent coating of stable emissivity was near 1,500° F. Oxidized surfaces produced at higher temperatures invariably flaked off before reaching emissivity stability. Polished strips were oxidized at 1,500° F for a period of time sufficient to insure stable emissivity. The curve of figure 16 shows the resulting variation of emissivity with time and indicates that a stable condition was reached after approximately 65 minutes at this temperature.

Measurements of total normal emissivity were made on test strips which had been oxidized at 1,500° F until stable emissivity was obtained over the temperature range of 600° to 1,500° F. The results of the investigation made to determine any deviation from Lambert's cosine law are shown in figure 17; here the circle is used to illustrate Lambert's law and the test points are indicated. These results show that titanium alloy (RS-120) with a heavily oxidized surface obeys this law within the experimental limits of accuracy.

Therefore, values of total hemispherical emmissivity over this temperature range are the same as the measured values of total normal emissivity. These values of total hemispherical emissivity are shown in figure 18.

Titanium (TMCA Ti-75A)

Attempts made to produce an adherent oxide coating on titanium (TMCA Ti-75A) at temperatures above 1,500° F were unsuccessful. Therefore, this material was oxidized at 1,500° F to produce a surface of stable emissivity, and the results are shown in figure 19. This alloy appears to oxidize at a much slower rate than titanium alloy (RS-120), a stable value of emissivity being obtained after 150 minutes at 1,500° F, or more than twice the oxidation time necessary for the alloy.

The total normal emissivity of specimens oxidized for 180 minutes was measured over the temperature range of 600° to 1,500° F. An investigation made to determine any deviation from Lambert's cosine law for these oxidized specimens gave the results shown in figure 20. These results show the adherence of this material to Lambert's law. Thus the values of total normal emissivity are also values of total hemispherical emissivity over the temperature range of 600° to 1,500° F (fig. 21).

Copper

The resistance heating of pure copper with the power available was not possible because of the very high electrical conductivity of this material. Therefore, several test-strip configurations were considered, and the one used for these tests consisted of 3-inch strips of Inconel welded on both ends of a 3-inch strip of copper. This 3-inch length of copper was sufficient to prevent excessive temperature gradients over the viewed portion of the copper test section of the strip. With this arrangement, the copper strip was heated mainly by conduction from the Inconel end strips and very little by the passage of current. This method allowed the copper portion to be heated to a maximum temperature of 1,400° F without exceeding the capacity of the heating system. Therefore, the preliminary investigation to determine the time necessary for an adherent, stable, oxide coating was conducted at this temperature.

The curve of figure 22 shows the results of this preliminary investigation. These results indicate that the copper oxidizes rapidly at 1,400° F and reaches a stable value of emissivity after approximately 30 minutes.

After this preliminary test, polished test strips were oxidized at 1,400° F for 40 minutes, to insure stable emissivity, and measurements

of total normal emissivity were made. The test to determine any deviation from Lambert's cosine law was made at various angles of incidence over the temperature range of 600° to 1,400° F. The results of this investigation, shown in figure 23, indicate a deviation from Lambert's law which is greater than experimental error. Therefore, the values of total hemispherical emissivity must be calculated by the integral methods of reference 1. These calculated values of total hemispherical emissivity and the measured values of total normal emissivity over the temperature range of 600° to 1,400° F are shown in figure 24.

Aluminum (AA 3003)

Because of the low melting point (≈1,200° F) of aluminum (AA 3003), the highest practical oxidation temperature was approximately 1,000° F. Oxidation at lower temperatures was not conducted since it was reasonable to assume that the oxides formed at lower temperatures would be as adherent as that formed at 1,000° F. The curve of figure 25 shows the variation of total emissivity as a function of time at 1,000° F and indicates that a stably oxidized surface is obtained after approximately 15 minutes at this temperature.

Polished test specimens were oxidized at 1,000° F for 30 minutes to insure stable emissivity, and measurements of total normal emissivity were made over the temperature range of 600° to 1,000° F. Measurements were then made at various angles of incidence over this temperature range to determine any deviation of the thermal radiation from Lambert's cosine law for diffuse emission. The results of this investigation, shown in figure 26, indicate a deviation from Lambert's cosine law for temperatures above 800° F which cannot be attributed to experimental error. This deviation necessitates the calculation of total hemispherical emissivity by methods previously discussed. These calculated values of total hemispherical emissivity and measured values of total normal emissivity are shown in figure 27 for the temperature range of 600° to 1,000° F.

Molybdenum

Attempts to produce on molybdenum a protective oxide that would have stable emissivity were unsuccessful for temperatures above 1,000° F because of the nature of the oxides produced. The oxide coating formed at 1,000° F, however, was adherent and was of a protective type which prevented continued oxidation of the base metal after approximately 70 minutes at 1,000° F. Thus, stable emissivity may be obtained by oxidation at this temperature, as indicated by the curve in figure 28.

After oxidation of polished molybdenum test specimens for 75 minutes to insure emissivity stability, measurements of total normal emissivity were made over the temperature range of 600° to 1,000° F. Tests were then conducted with these stably oxidized specimens to determine any deviation of the thermal radiation from Lambert's cosine law over this temperature range. The results of this investigation, shown in figure 29, indicate a considerable deviation at angles of incidence of 45° or more. Therefore, values of total hemispherical emissivity were calculated and these values, together with the measured values of total normal emissivity, are shown in figure 30 over the temperature range of 600° to 1,000° F.

Tantalum

Tantalum metal has oxidation characteristics very similar to those of molybdenum in that an adherent oxide of a protective nature cannot be produced at high temperatures.

The curves of figure 31 show the results obtained when polished specimens of tantalum were oxidized at various temperatures. The curve for oxidation at 1,000° F shows fairly rapid oxidation for 45 minutes; then a white flaky oxide began to form and oxidation continued more slowly. At higher temperatures, emissivity increased rapidly until a maximum point was reached, after which an equally rapid decrease occurred. This decrease was caused by an increasing thickness of a white crystalline oxide which was very porous and very nonadherent. Although the emissivity appears to be approaching a stable value, the looseness of the oxide formed precludes any practical uses for this oxide-coated material.

Summary Plot of Total Hemispherical Emissivities

For the convenience of the reader who may be interested only in the ultimate results obtained in this investigation, the values of total hemispherical emissivity for stably oxidized specimens as shown in figures 10, 14, 18, 21, 24, 27, and 30 are also shown together in figure 32.

CONCLUDING REMARKS

Measurements of total hemispherical emissivity of several stably oxidized materials indicate the difficulty in making general conclusions for groups of materials. Some materials which have very similar constituents may have entirely different values of emissivity. For instance, the total hemispherical emissivity of titanium alloy (RS-120) varies

from 0.670 to 0.715 and that of titanium (TMCA Ti-75A) from 0.545 to 0.595 over the temperature range of 700° to 1,500° F.

The manner in which oxidation affects the emissivity may also vary greatly for different metals. The emissivity of most metals increases with an increase of temperature. There are exceptions to this rule, as illustrated by stably oxidized mild steel (AISI C1020), which experiences a decrease of emissivity for an increase of temperature above 1,200° F, and molybdenum, which has a decrease of emissivity above 800° F.

Oxidation at high temperatures to obtain stable emissivity may increase emissivity greatly, as in the case of mild steel (AISI C1020) or stainless steel (AISI 303), or only slightly, as in the case of aluminum (AA 3003). It appears that this increase in emissivity of an oxidized metal depends largely on the thickness of the coating necessary for stable emissivity.

Langley Aeronautical Laboratory,
National Advisory Committee for Aeronautics,
Langley Field, Va., October 3, 1957.

REFERENCES

1. O'Sullivan, William J., Jr., and Wade, William R.: Theory and Apparatus for Measurement of Emissivity for Radiative Cooling of Hypersonic Aircraft With Data for Inconel and Inconel X. NACA TN 4121, 1957.

2. Edwards, David F.: The Emissivity of a Conical Black Body. Report 2144-105-T, Project Michigan, Univ. of Michigan Eng. Res. Inst., Nov. 1956. (Available from ASTIA as AD No. 121838.)

3. Jakob, Max: Heat Transfer. Vol. I. John Wiley & Sons, Inc., c.1949.

4. Lustman, Benjamin: The Resistance of Metals to Oxidation at Elevated Temperature. Metals Handbook - 1948 Edition, A.S.M., pp. 223-227.

5. Anon.: Handbook on Titanium Metal. Seventh ed., Titanium Metals Corp. of America (New York City), 1953.

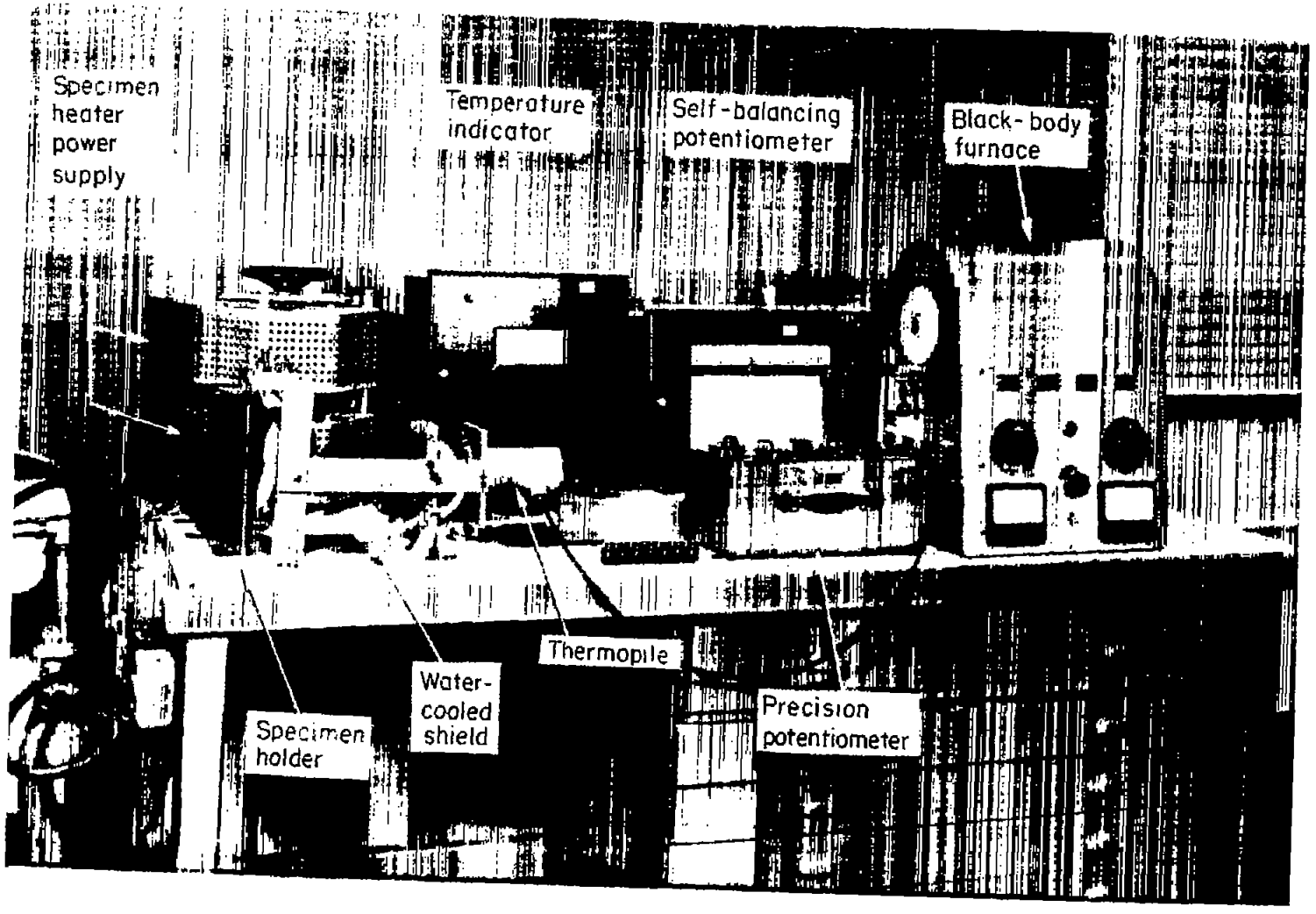

L-96503.2

Figure 1.- General view of emissivity-measuring apparatus with identification of principal components.

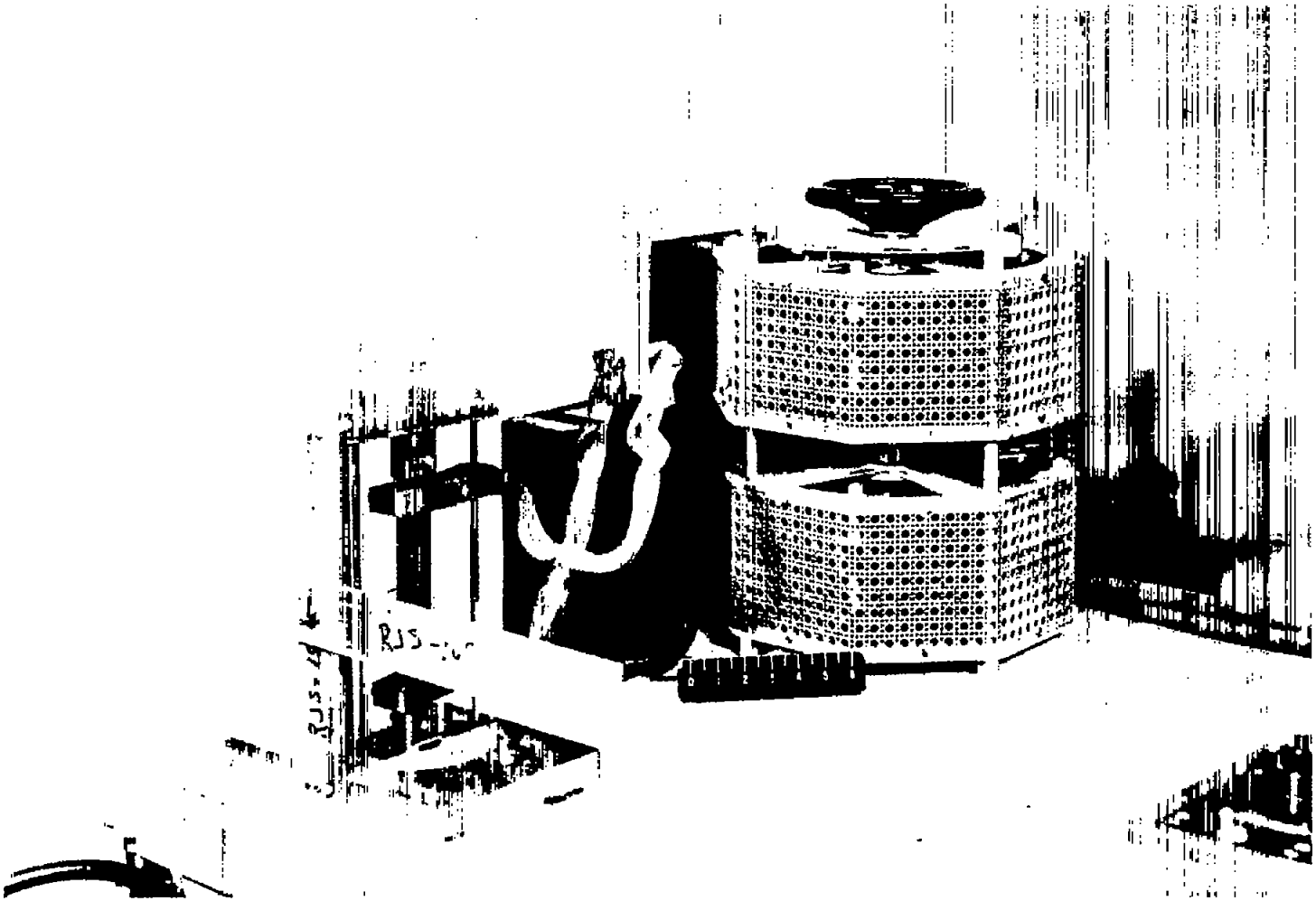

L-96504.1

Figure 3.- Test-specimen holder with specimen installed and electric power supply for heating specimen.

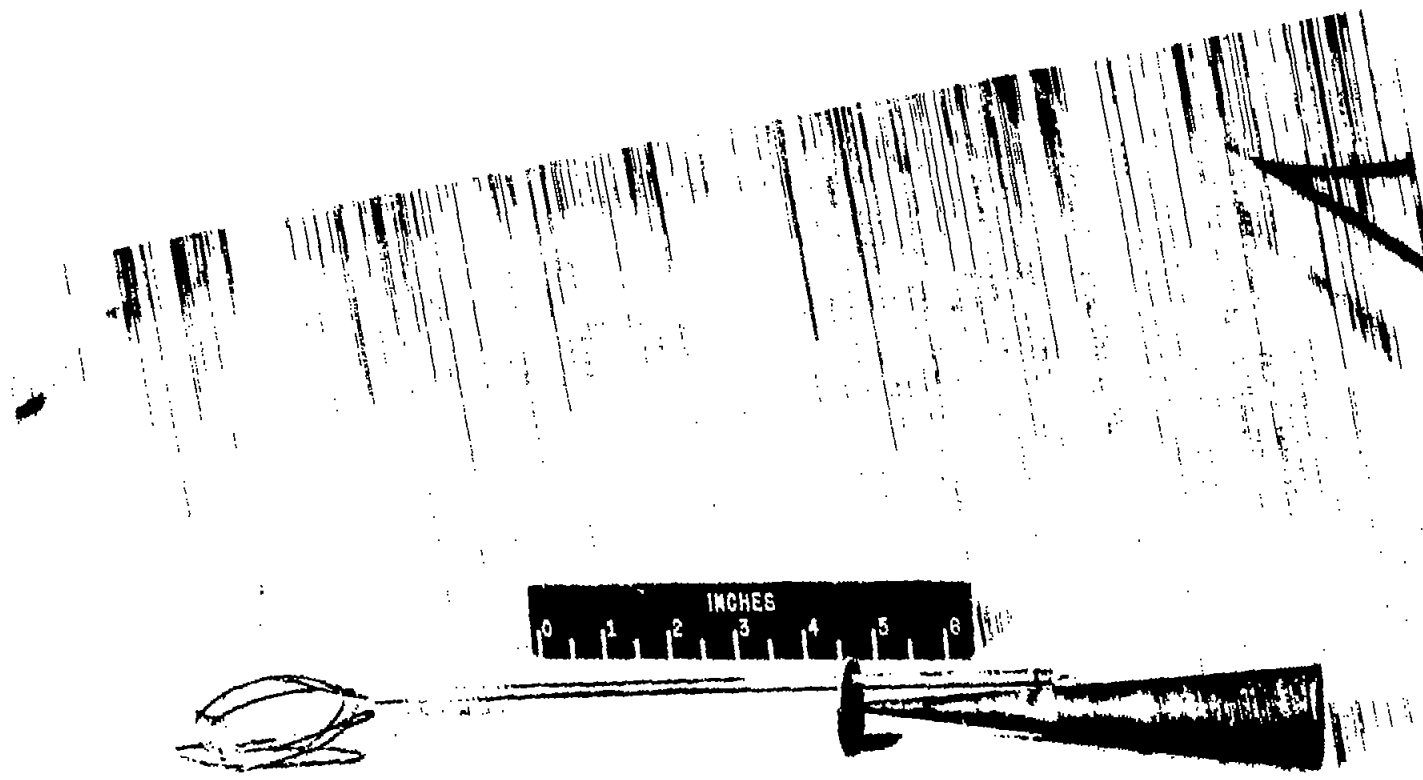

L-96506

Figure 4.- Reference-black-body conical target with thermocouple.

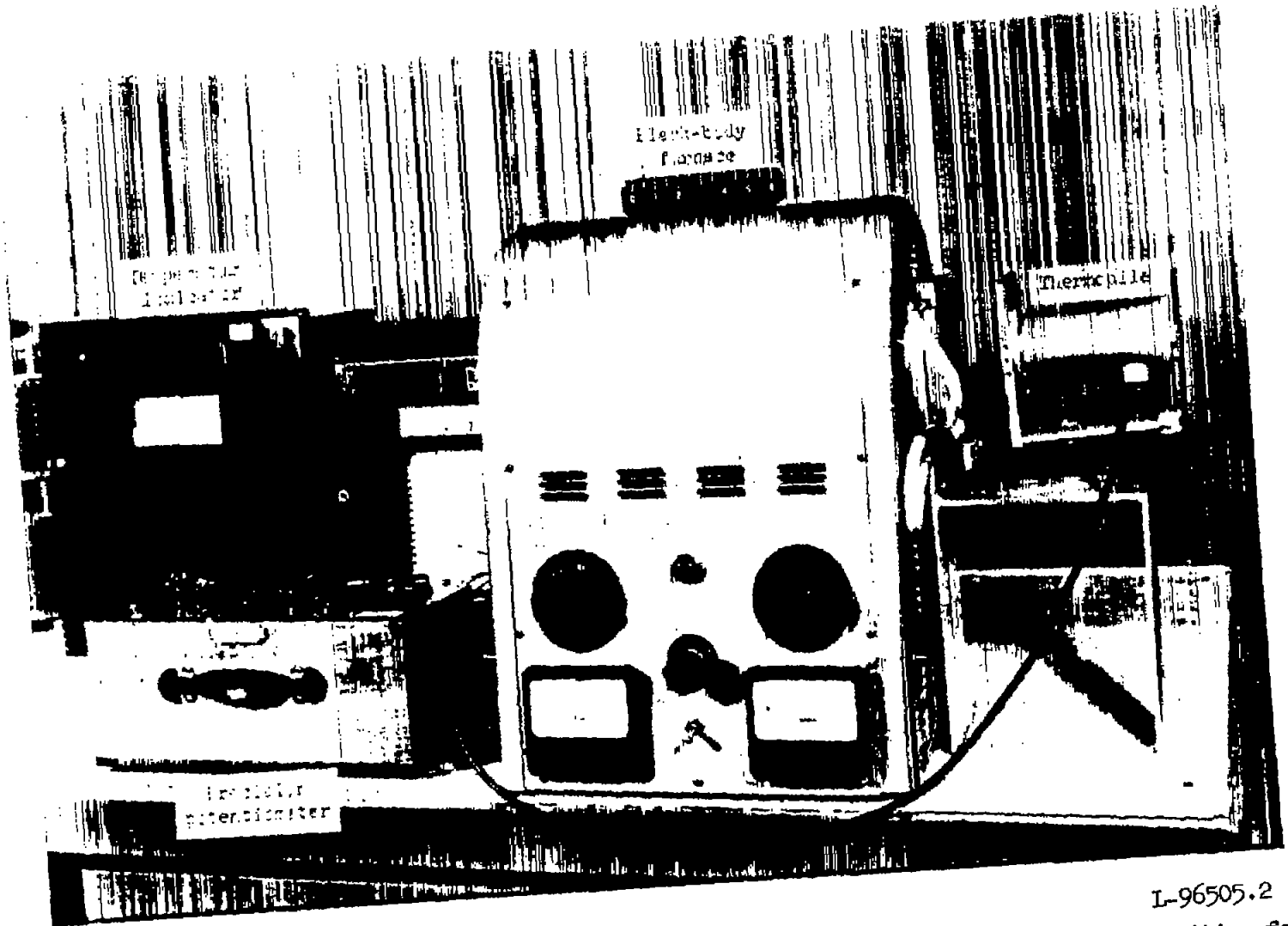

L-96505.2

Figure 5.- Reference-black-body furnace with thermopile and water-cooled shield in position for viewing black body, and precision potentiometer used with thermopile.

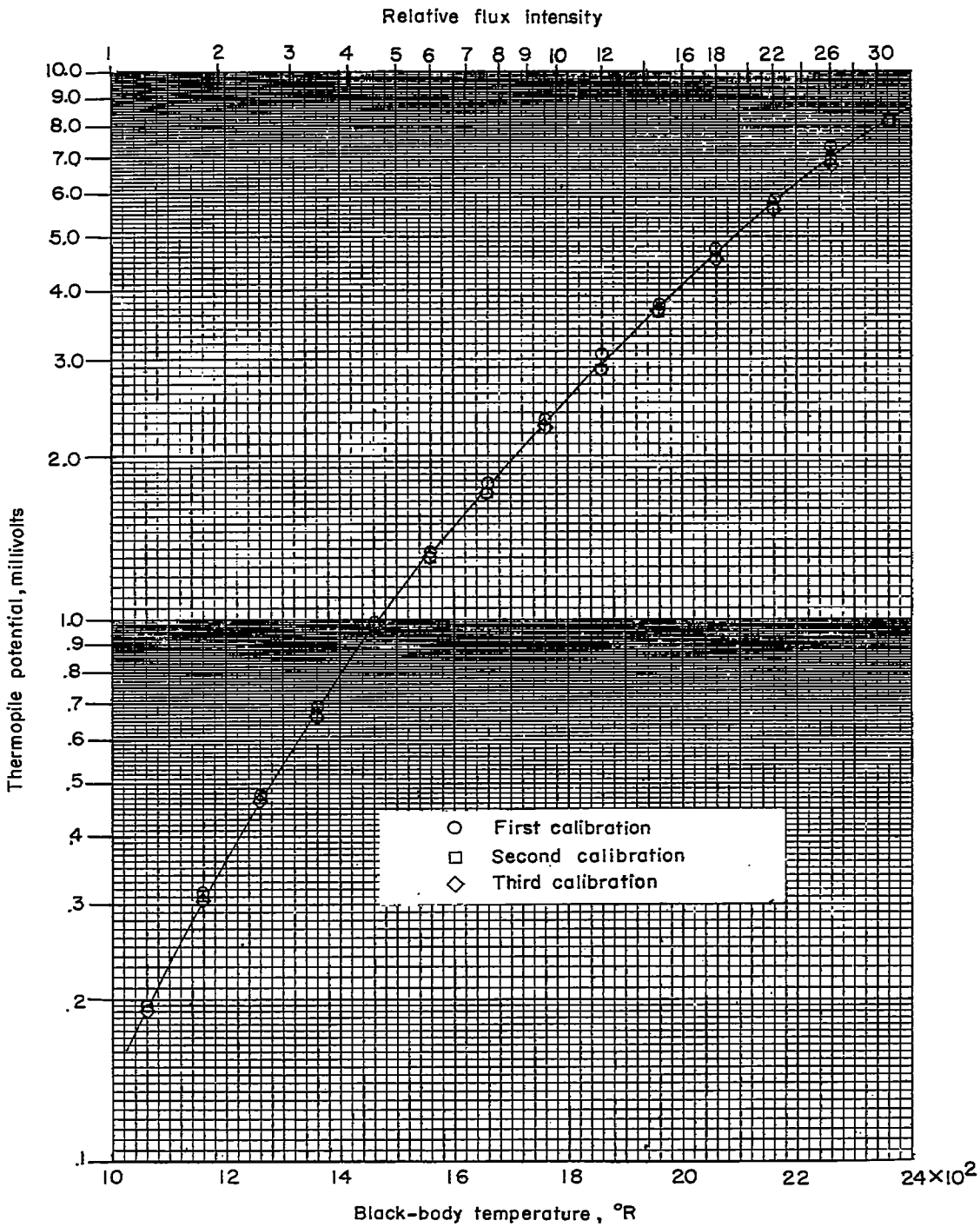

Figure 6.- Calibration of the thermopile flux-measuring system.

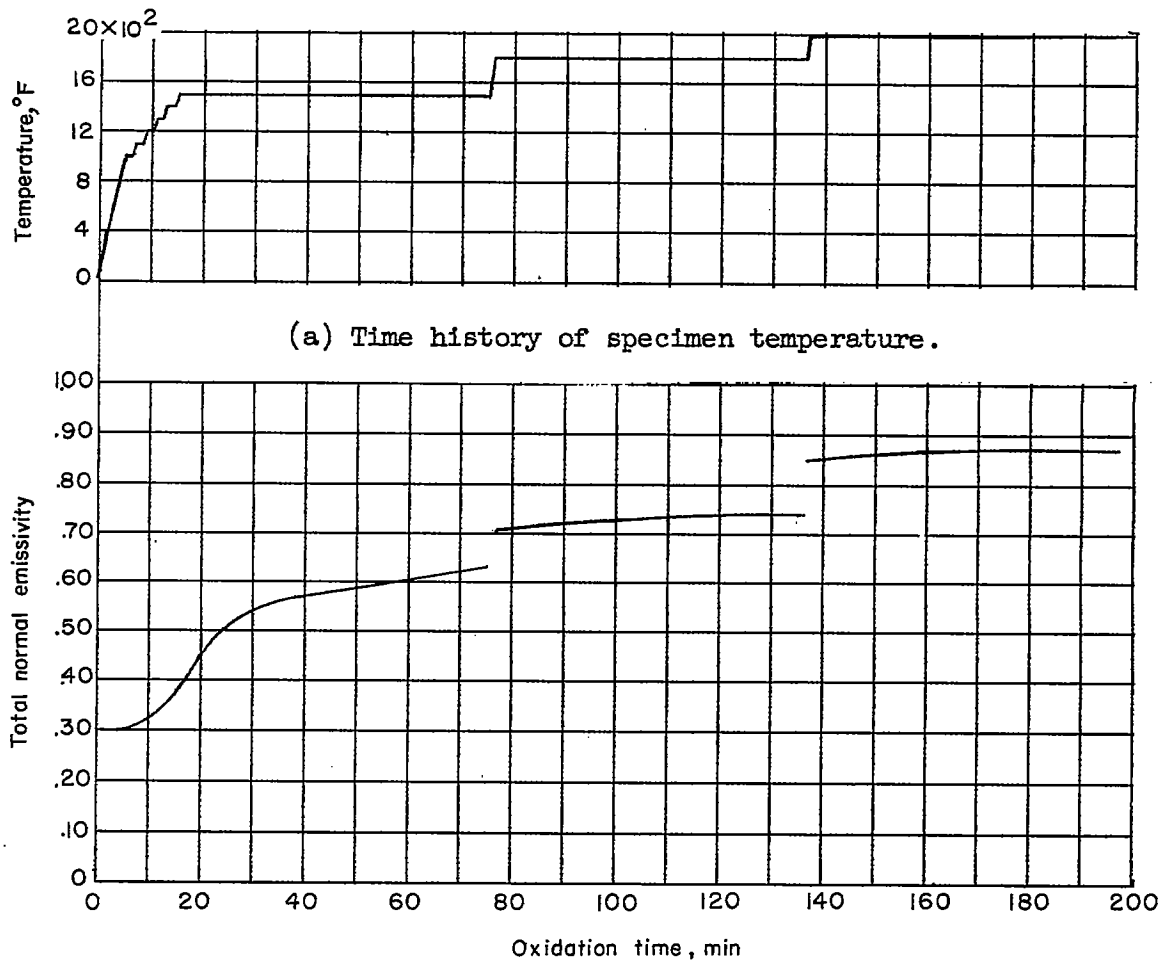

(b) Time history of total normal emissivity.

Figure 7.- Exploration of the stability of the total normal emissivity of stainless steel (AISI 303) heated in quiescent air.

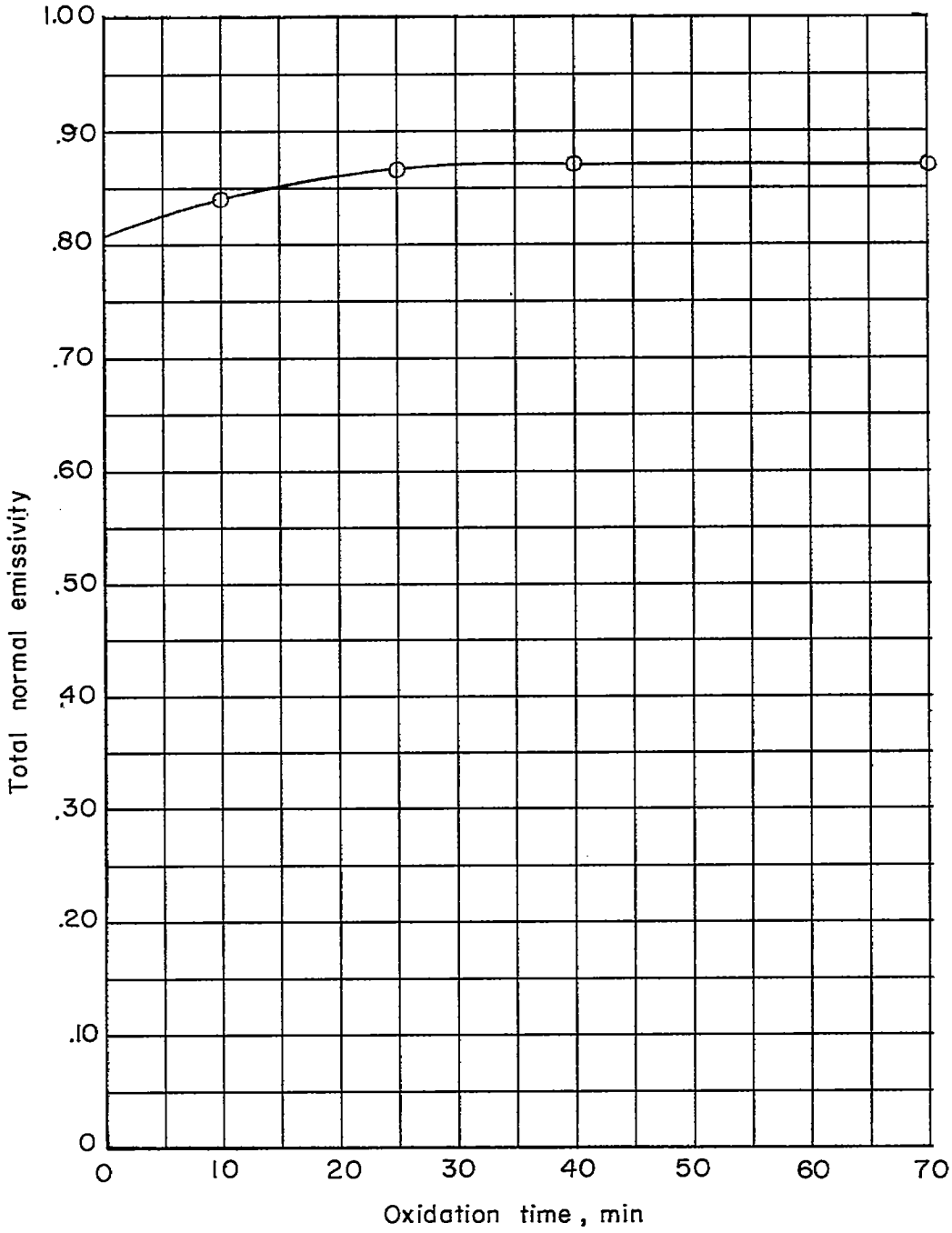

Figure 8.- Variation of total normal emissivity of stainless steel (AISI 303) with time of oxidation at 2,000° F in quiescent air.

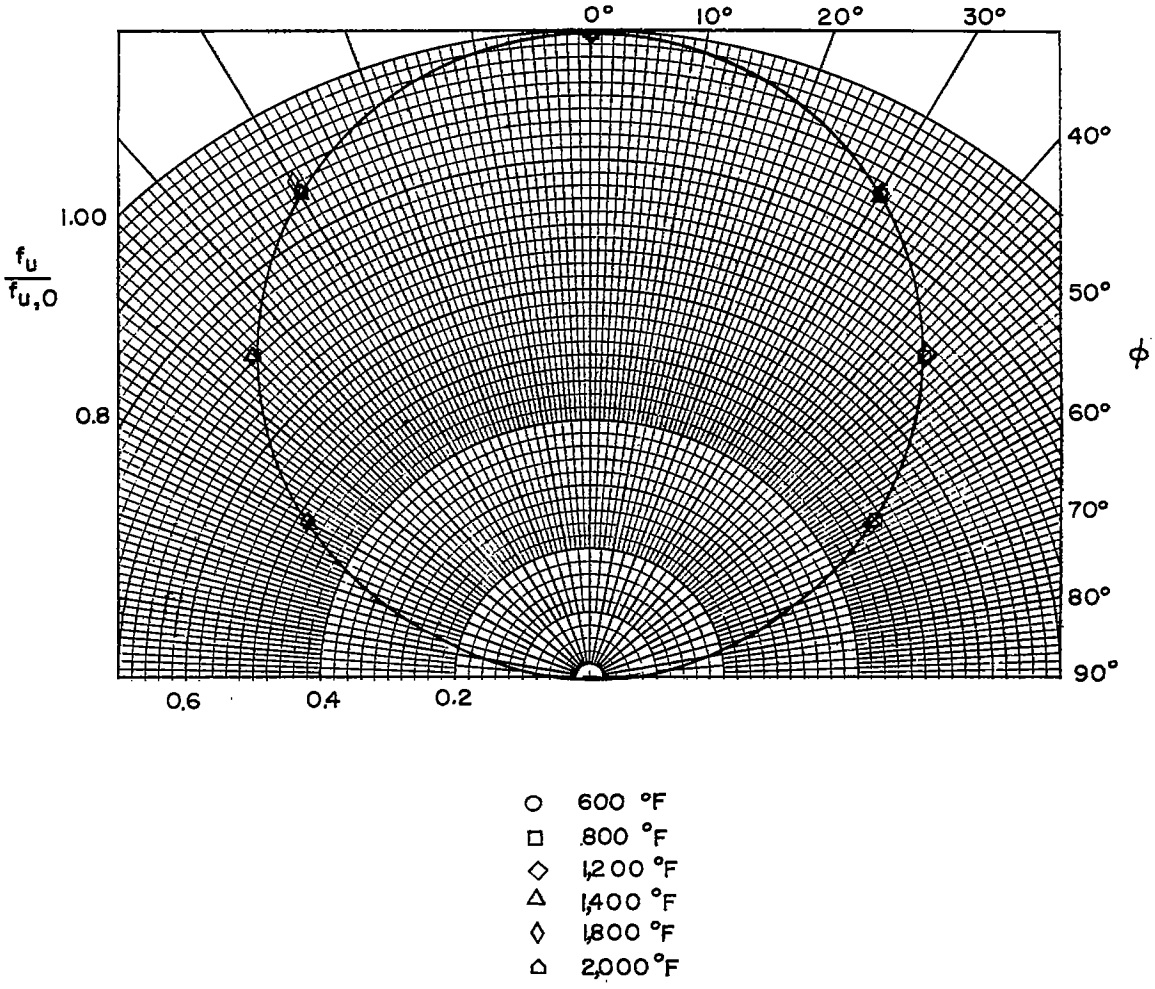

Figure 9.- Comparison of the emission of stainless steel (AISI 303) oxidized 60 minutes at 2,000° F with Lambert's cosine law of diffuse emission at temperatures from 600° to 2,000° F.

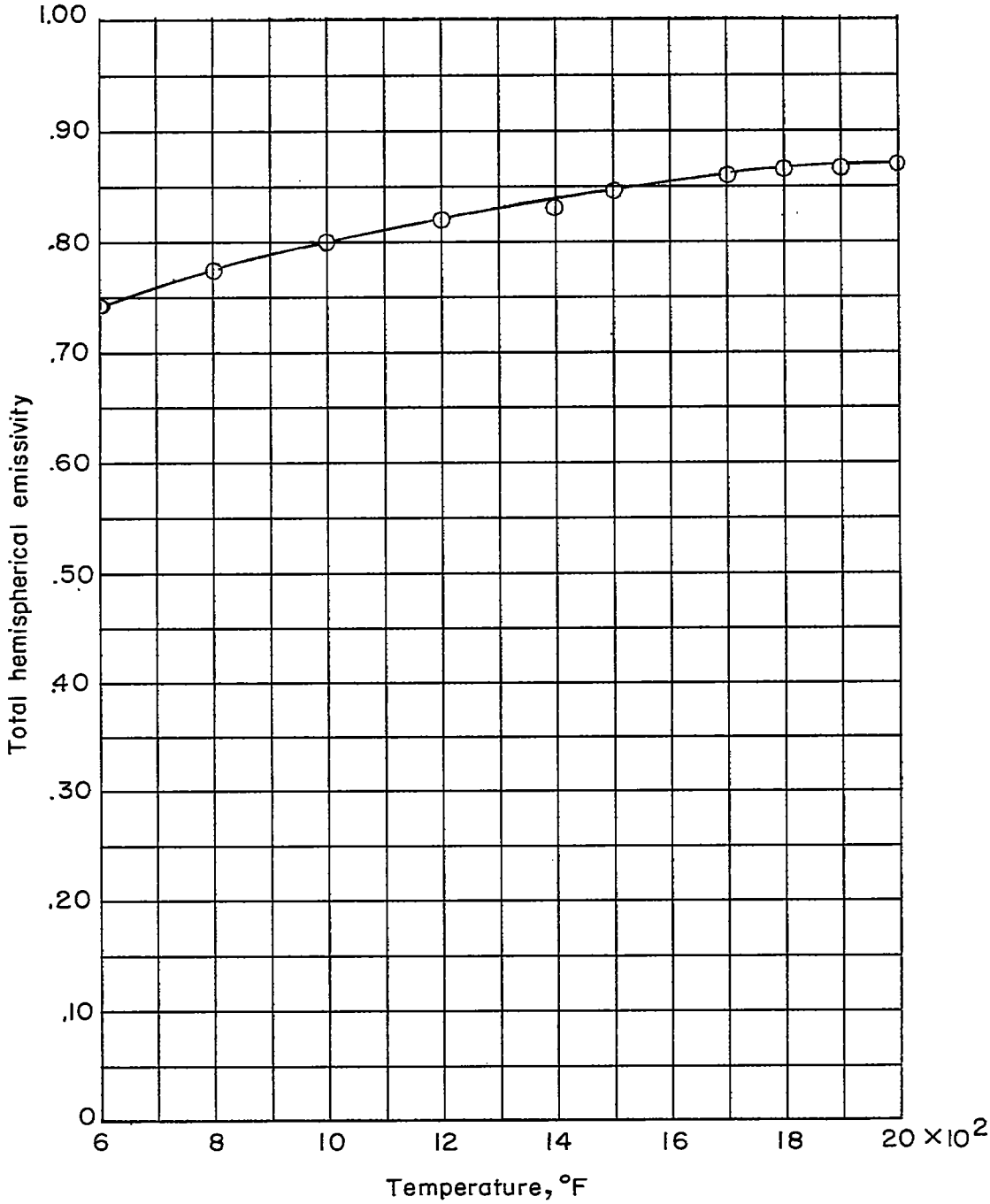

Figure 10.- Total hemispherical emissivity of stably oxidized (at 2,000° F) stainless steel (AISI 303) as a function of temperature.

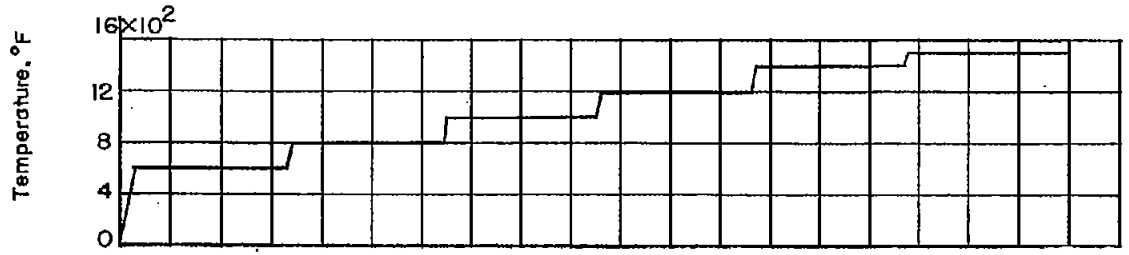

(a) Time history of specimen temperature.

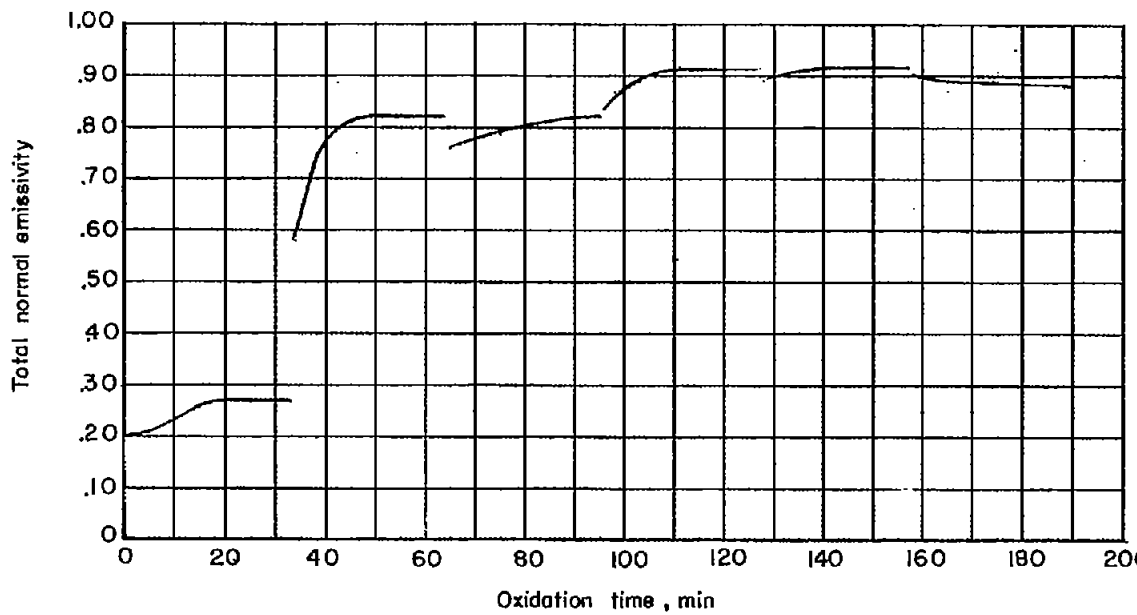

(b) Time history of total normal emissivity.

Figure 11.- Exploration of the stability of the total normal emissivity of mild steel (AISI C1020) heated in quiescent air.

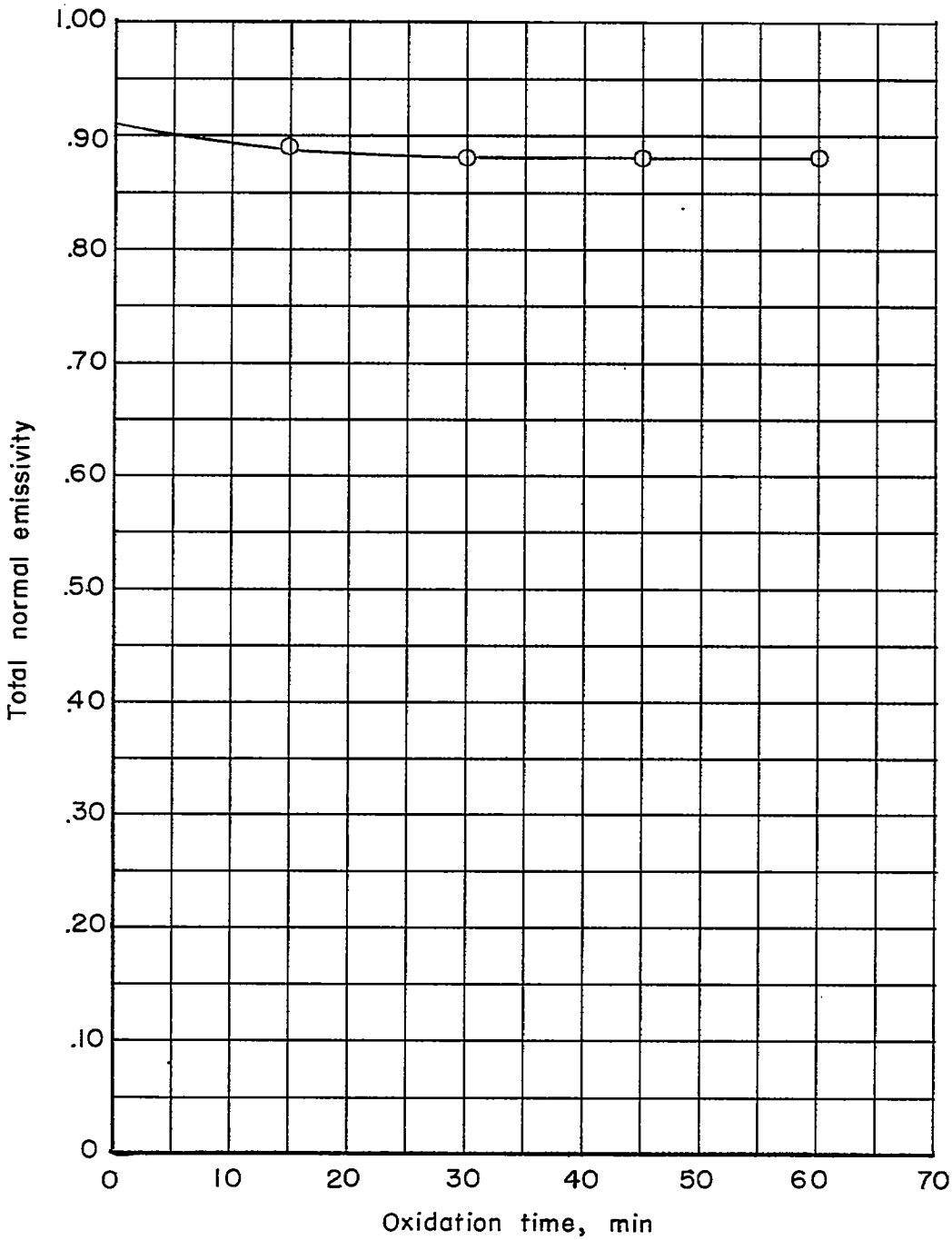

Figure 12.- Variation of total normal emissivity of mild steel (AISI C1020) with time of oxidation at 1,500° F in quiescent air.

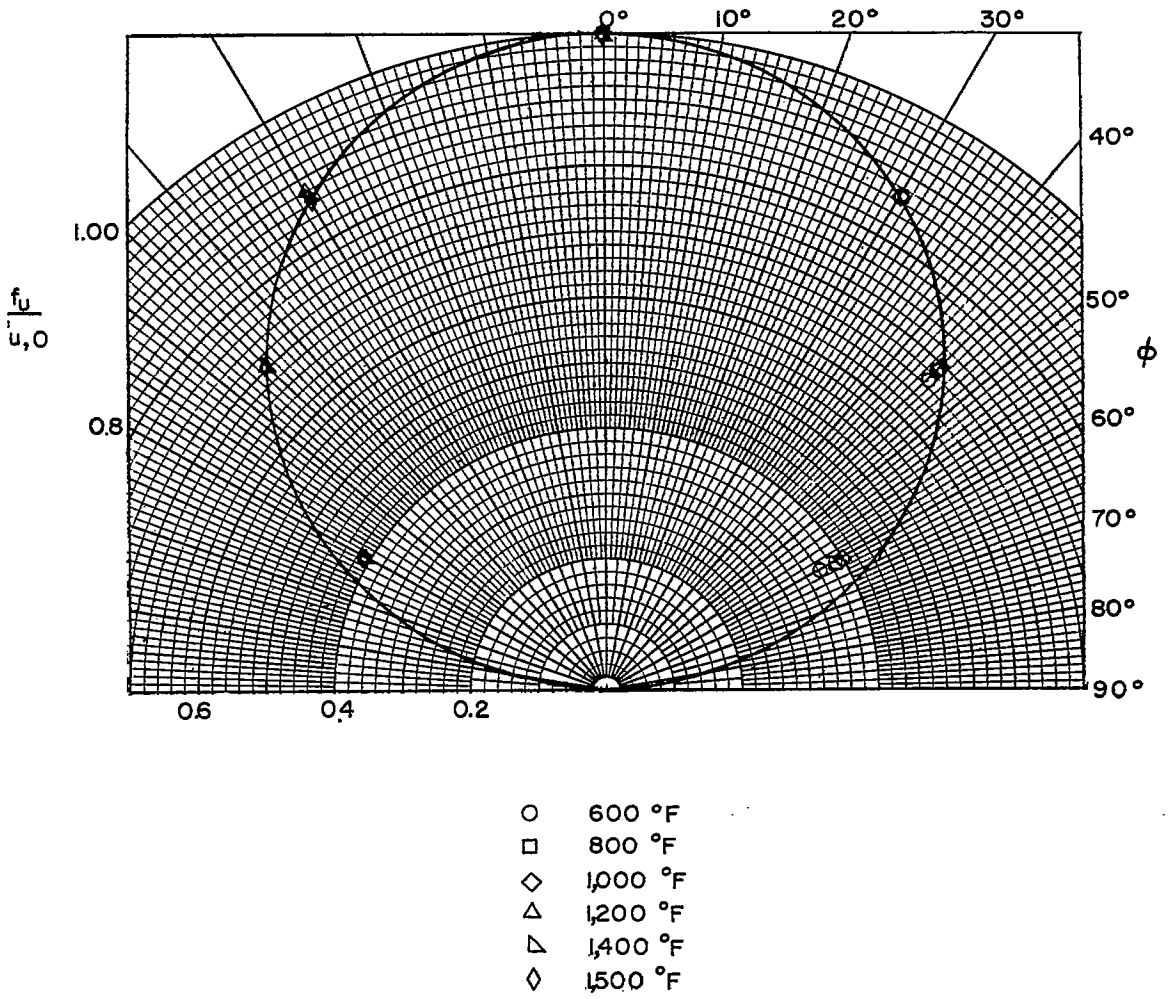

Figure 13.- Comparison of the emission of mild steel (AISI C1020) oxidized 30 minutes at 1,500° F with Lambert's cosine law of diffuse emission at temperatures from 600° to 1,500° F.

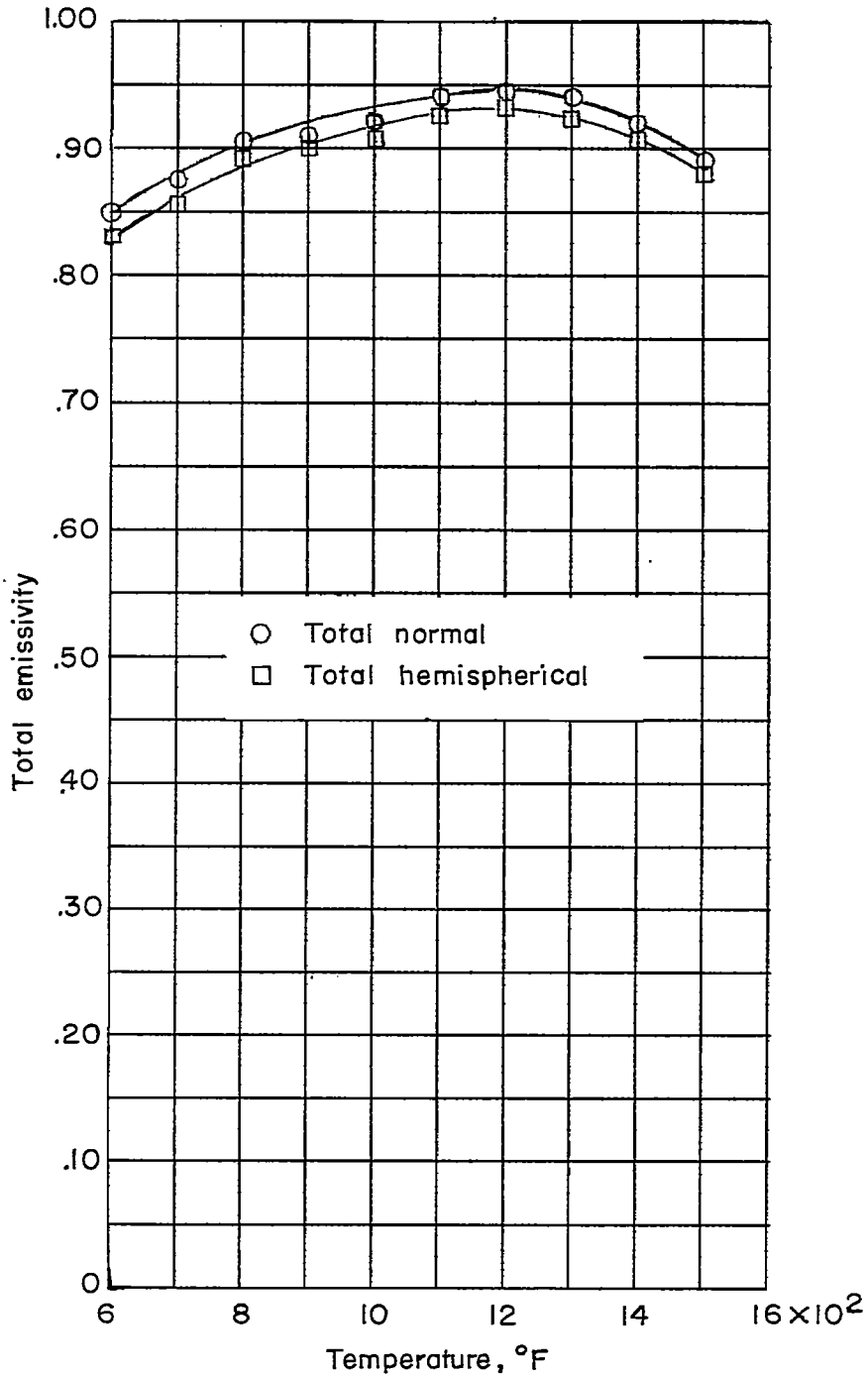

Figure 14.- Total emissivity of stably oxidized (at 1,500° F) mild steel (AISI C1020) as a function of temperature.

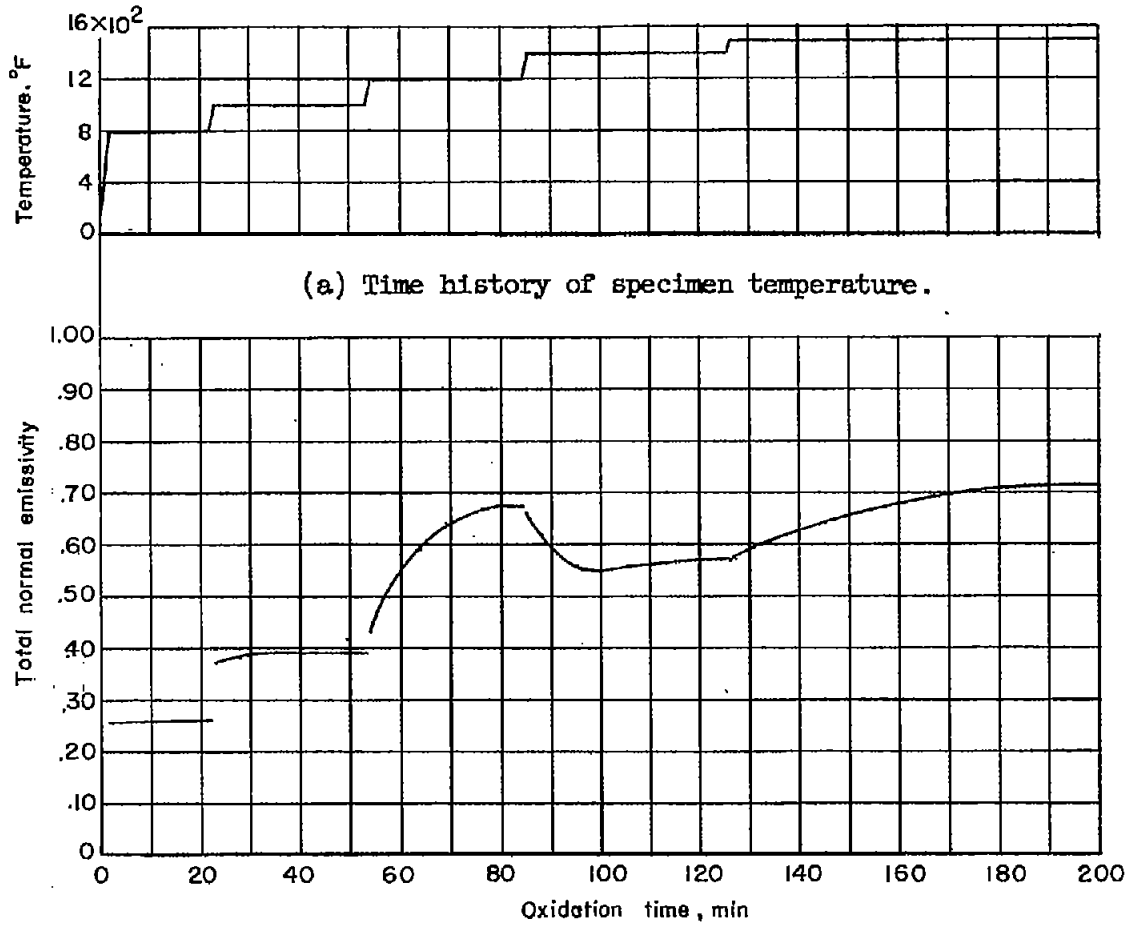

(a) Time history of specimen temperature.

(b) Time history of total normal emissivity.

Figure 15.- Exploration of the stability of the total normal emissivity of titanium alloy (RS-120) heated in quiescent air.

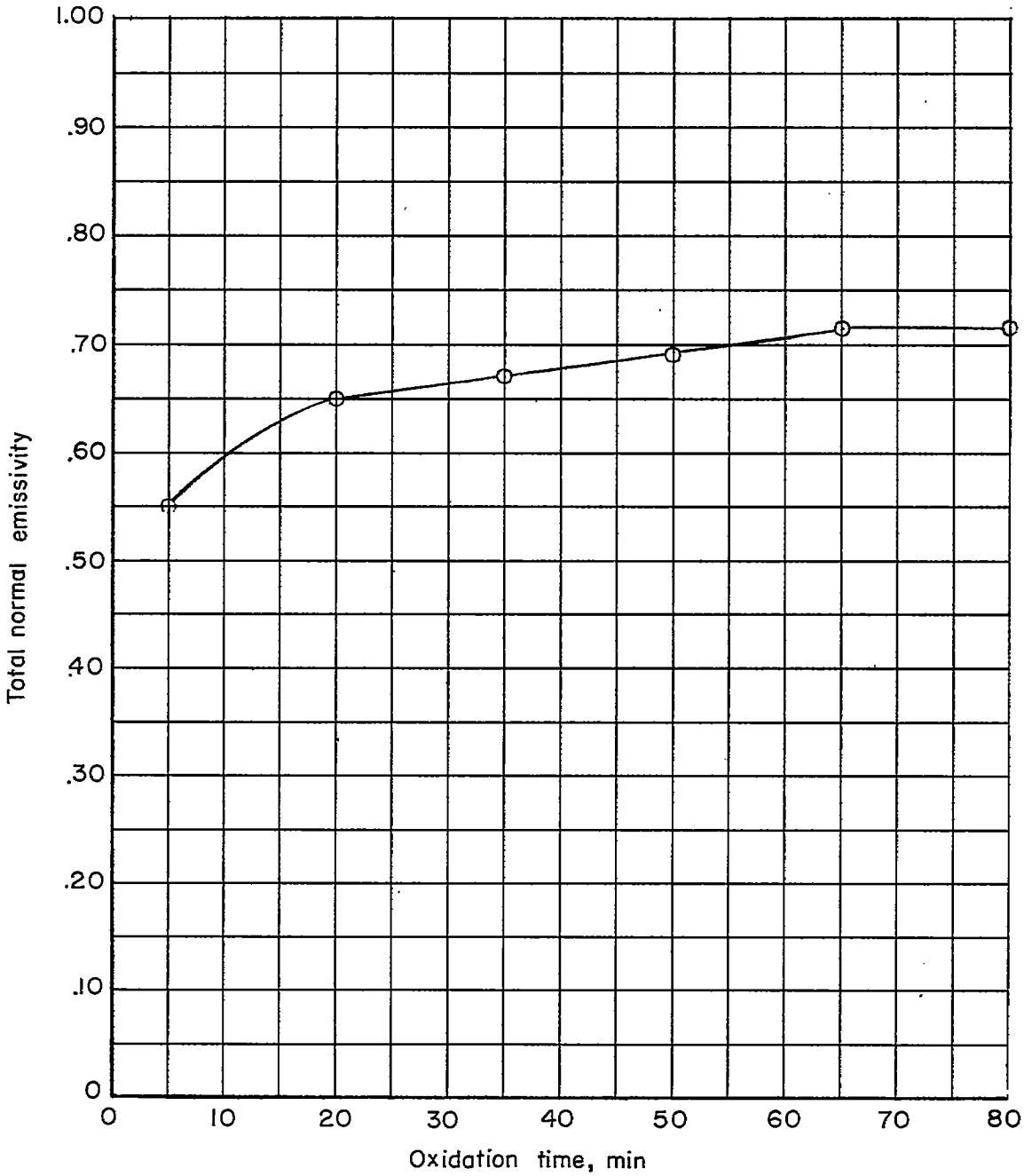

Figure 16.- Variation of total normal emissivity of titanium alloy (RS-120) with time of oxidation at 1,500° F in quiescent air.

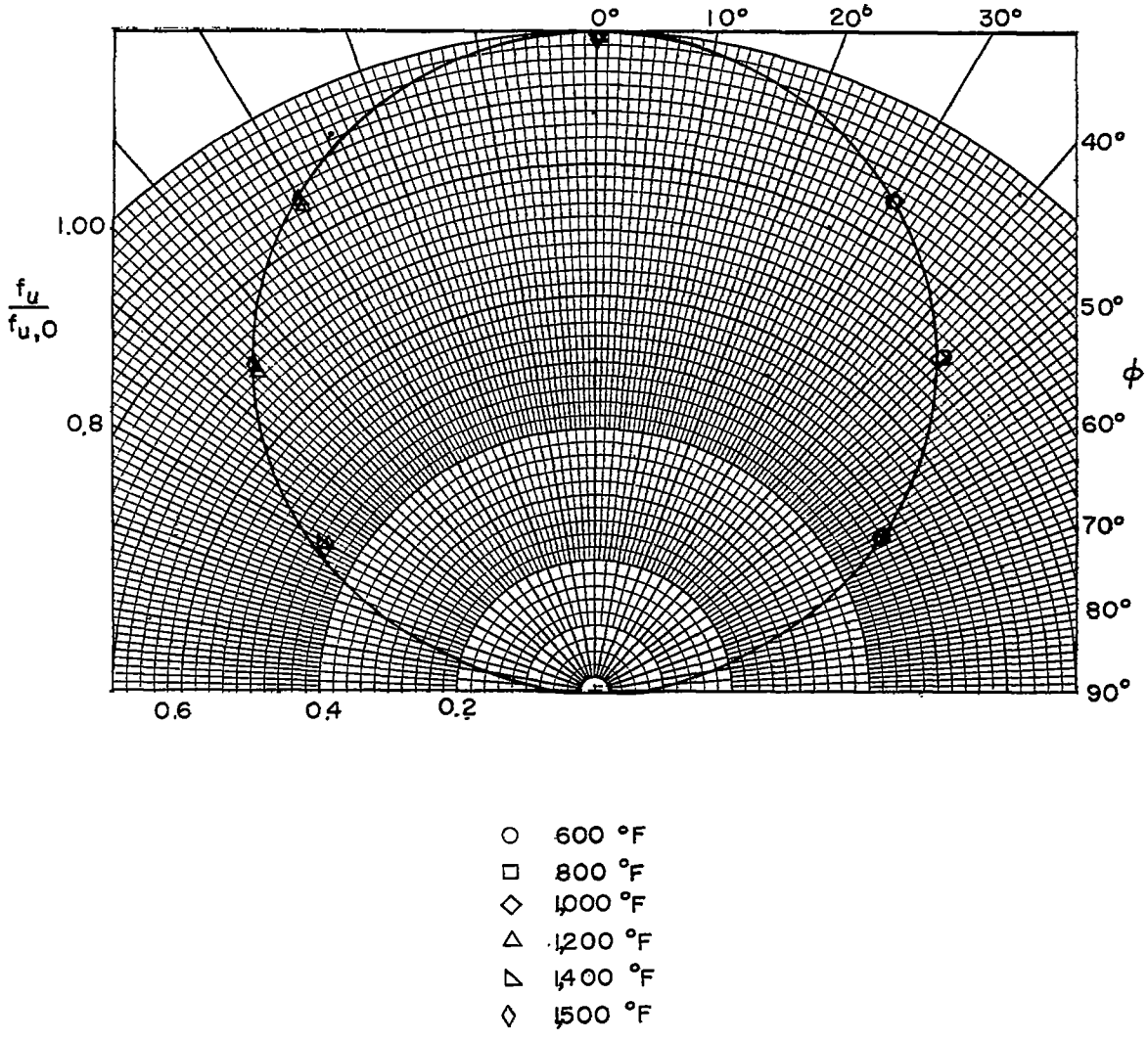

Figure 17.- Comparison at temperatures from 600° to 1,500° F of the emission of titanium alloy (RS-120) oxidized 75 minutes at 1,500° F with Lambert's cosine law of diffuse emission.

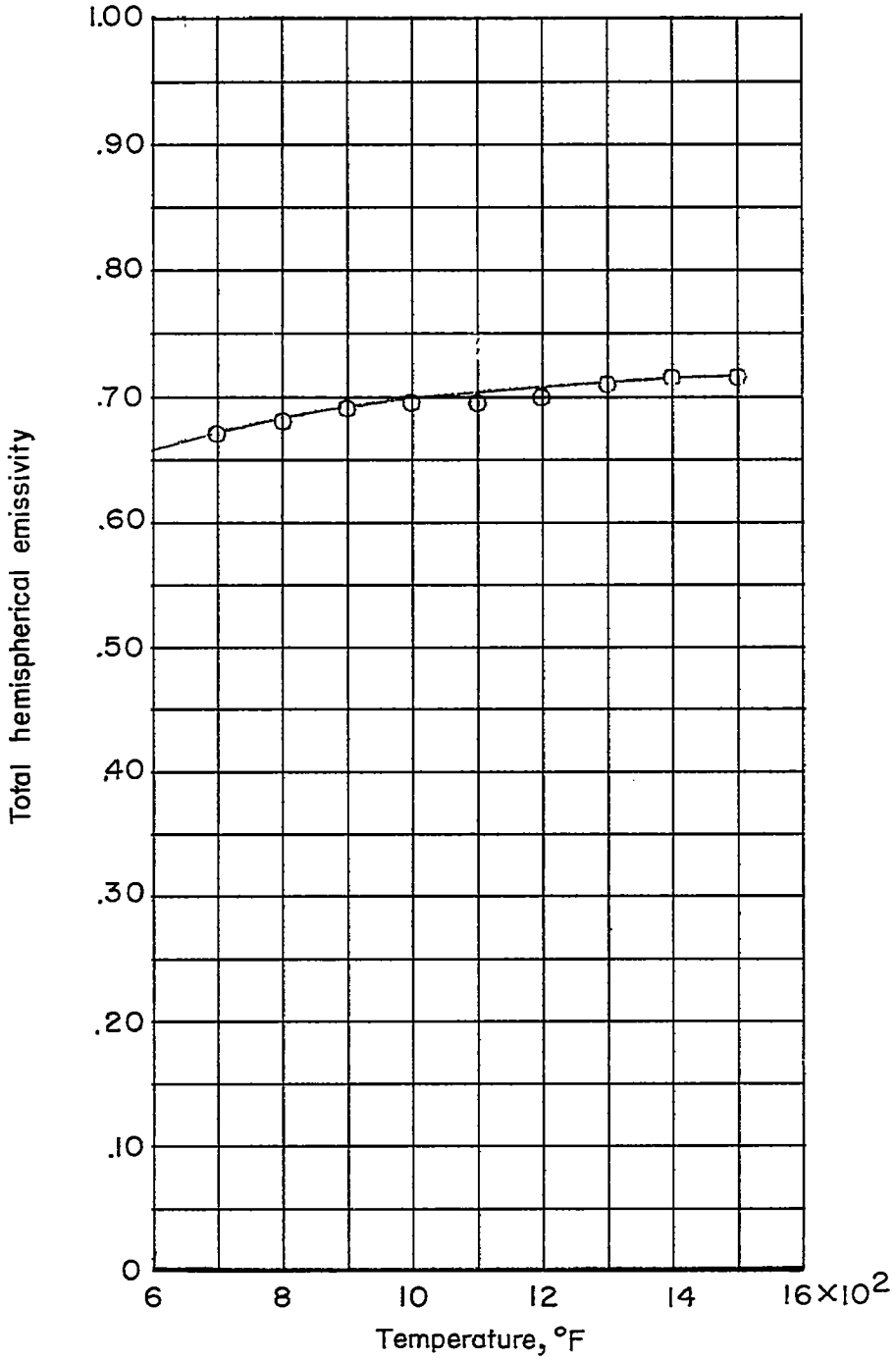

Figure 18.- Total hemispherical emissivity of stably oxidized (at 1,500° F) titanium alloy (RS-120) as a function of temperature.

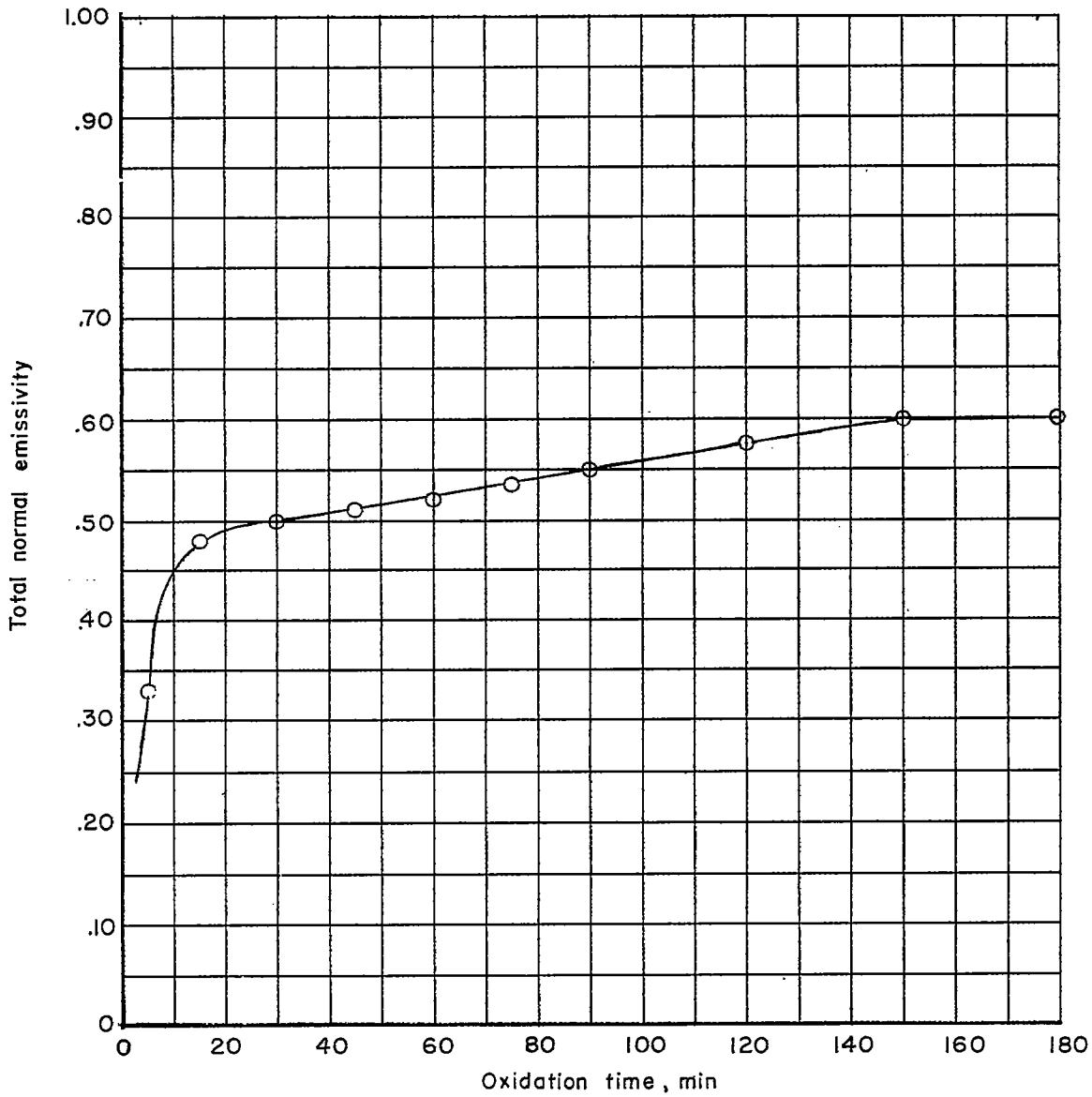

Figure 19.- Variation of total normal emissivity of titanium (TMCA Ti-75A) with time of oxidation at 1,500° F in quiescent air.

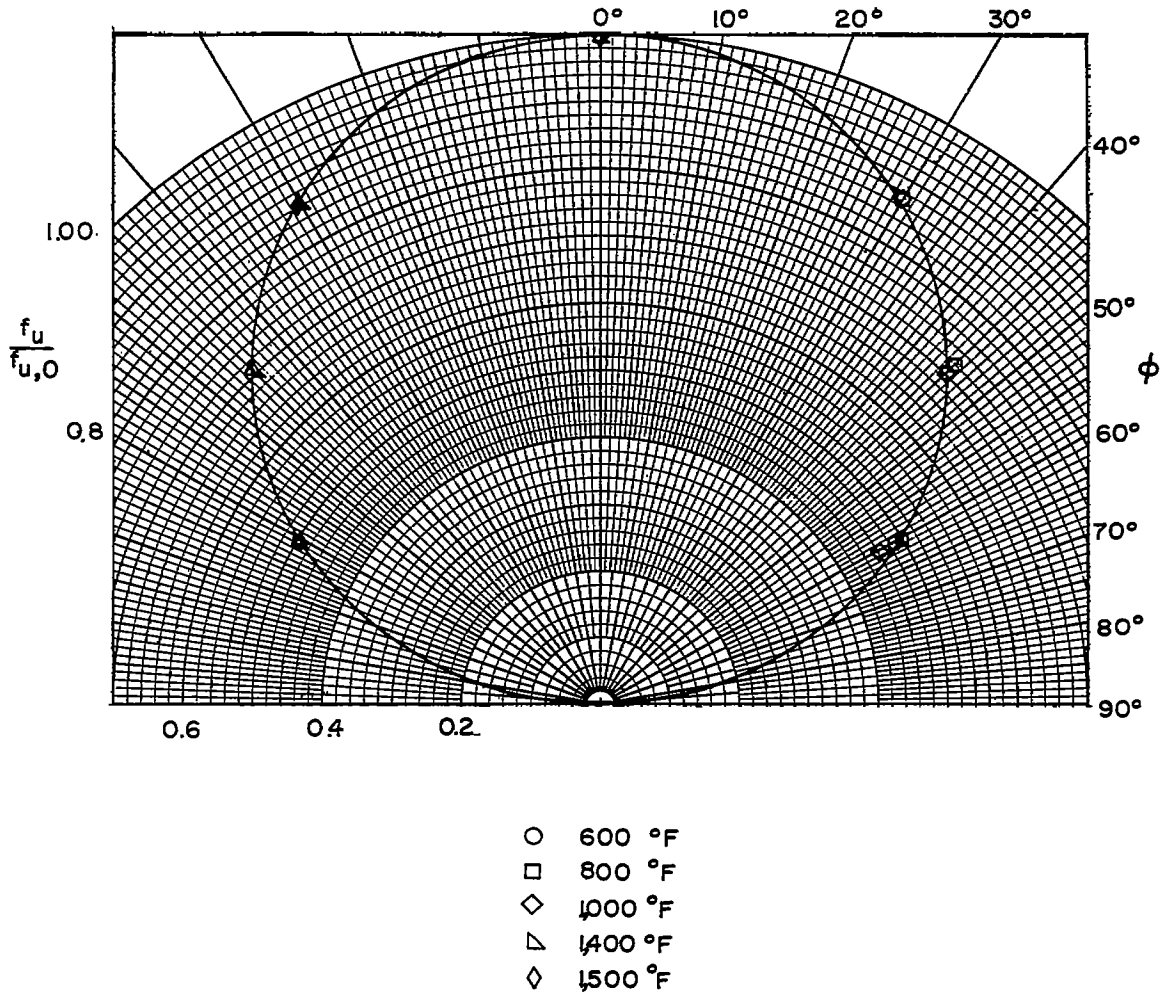

Figure 20.- Comparison of the emission of titanium (TMCA Ti-75A) oxidized 180 minutes at 1,500° F with Lambert's cosine law of diffuse emission at temperatures from 600° to 1,500° F.

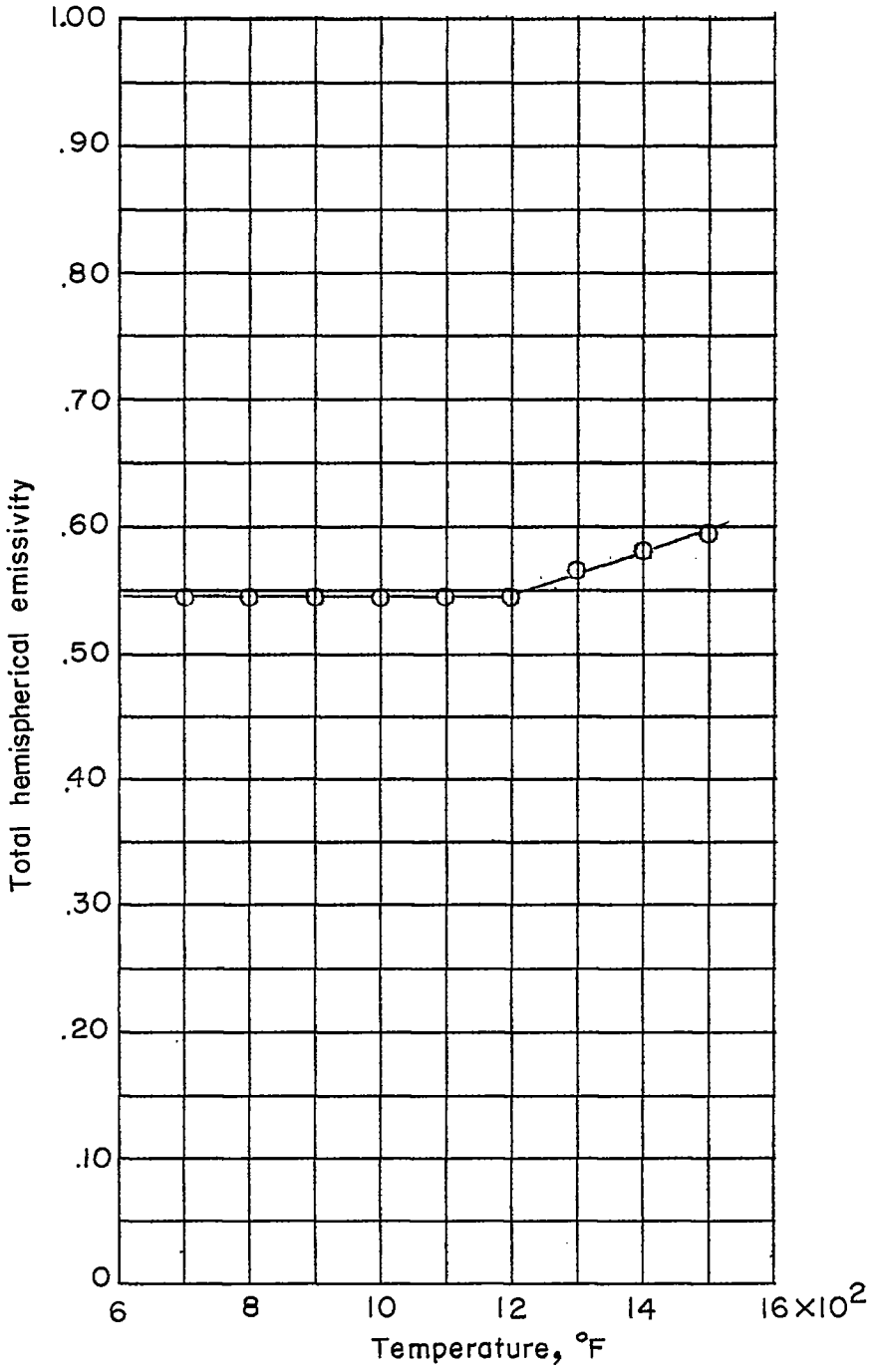

Figure 21.- Total hemispherical emissivity of stably oxidized (at 1,500° F) titanium (TMCA Ti-75A) as a function of temperature.

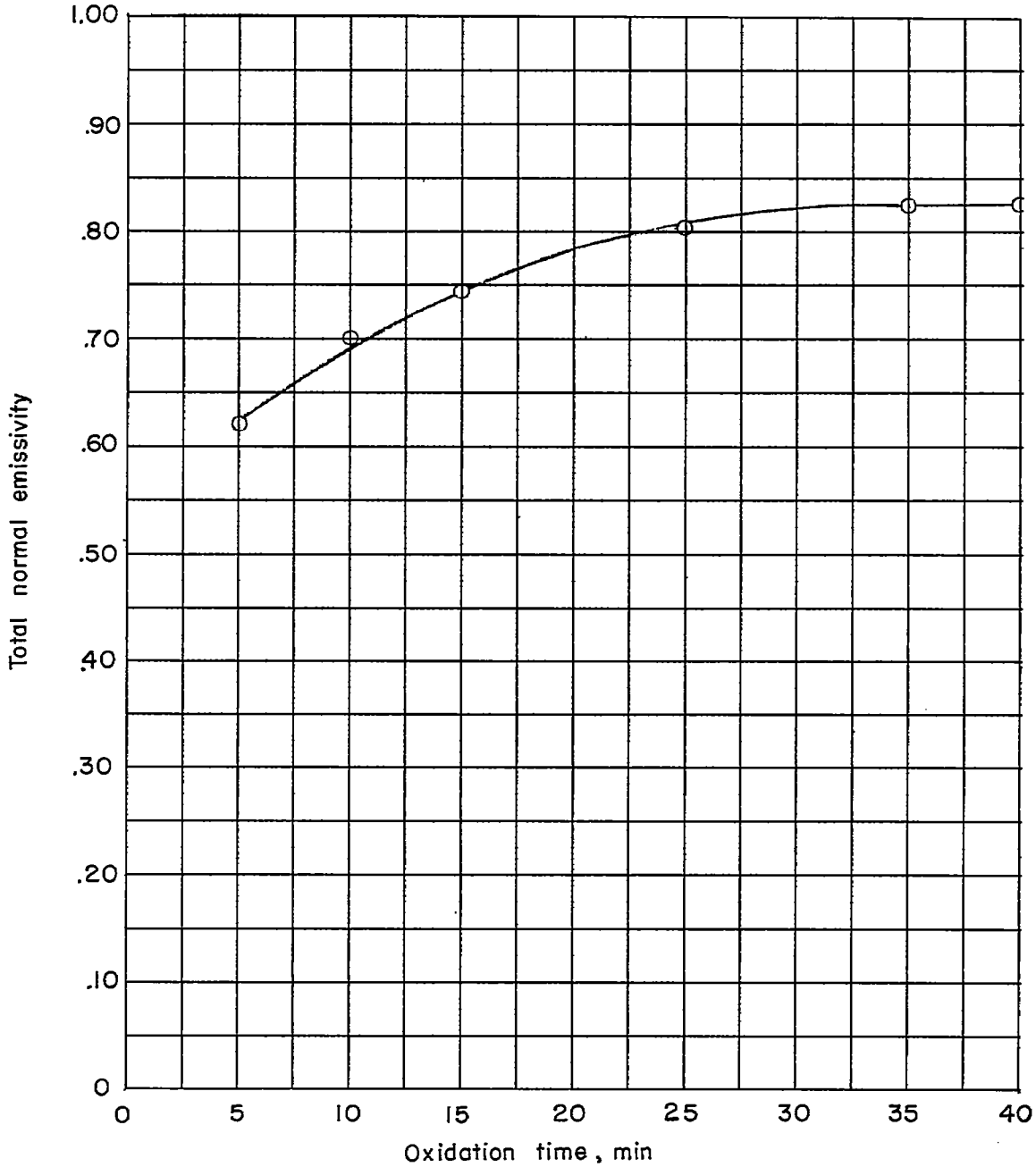

Figure 22.- Variation of total normal emissivity of copper with time of oxidation at 1,400° F in quiescent air.

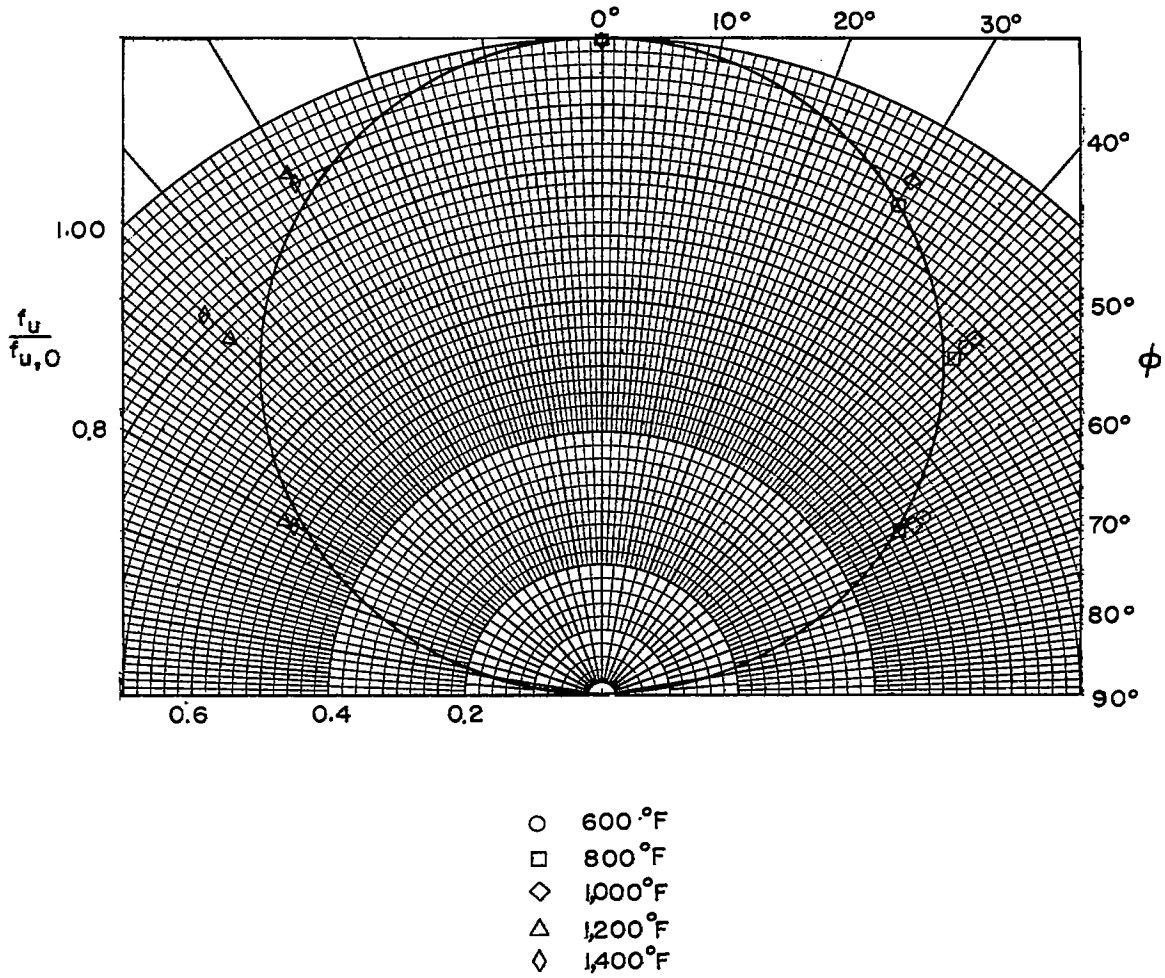

Figure 23.- Comparison of the emission of copper oxidized 40 minutes at 1,400° F with Lambert's cosine law of diffuse emission at temperatures from 600° to 1,400° F.

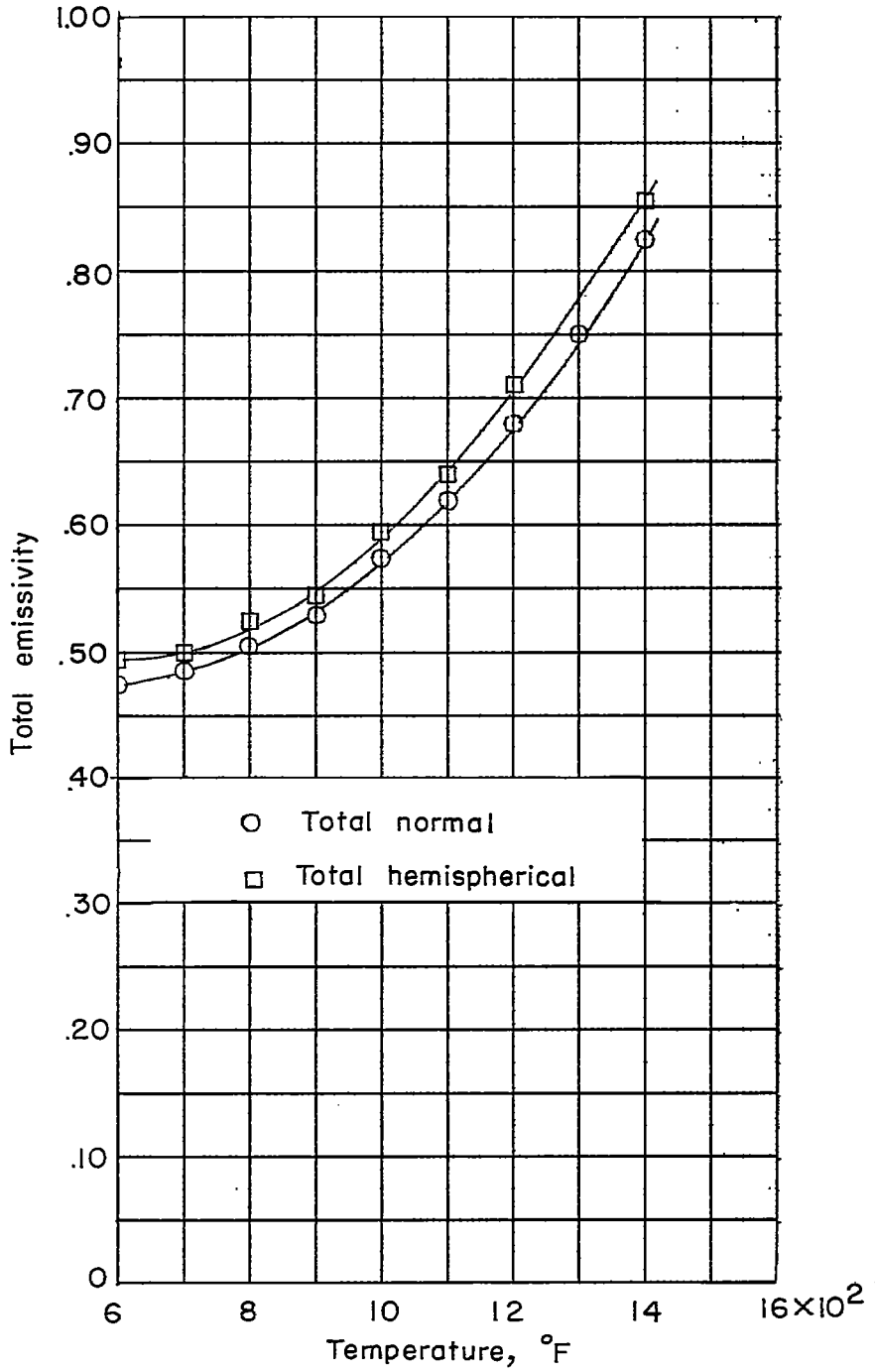

Figure 24.- Total emissivity of stably oxidized (at 1,400° F) copper as a function of temperature.

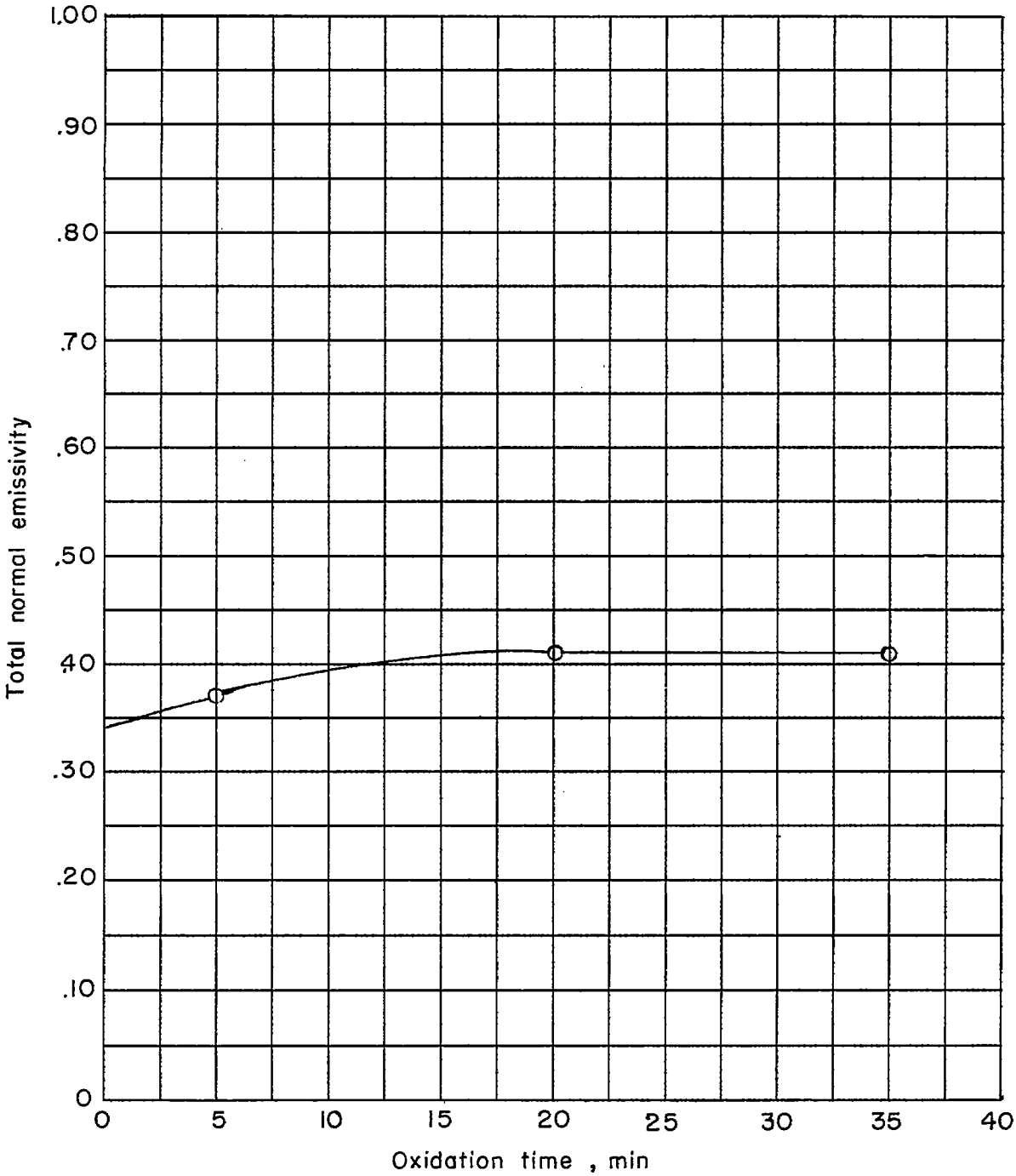

Figure 25.- Variation of total normal emissivity of aluminum (AA 3003) with time of oxidation at 1,000° F in quiescent air.

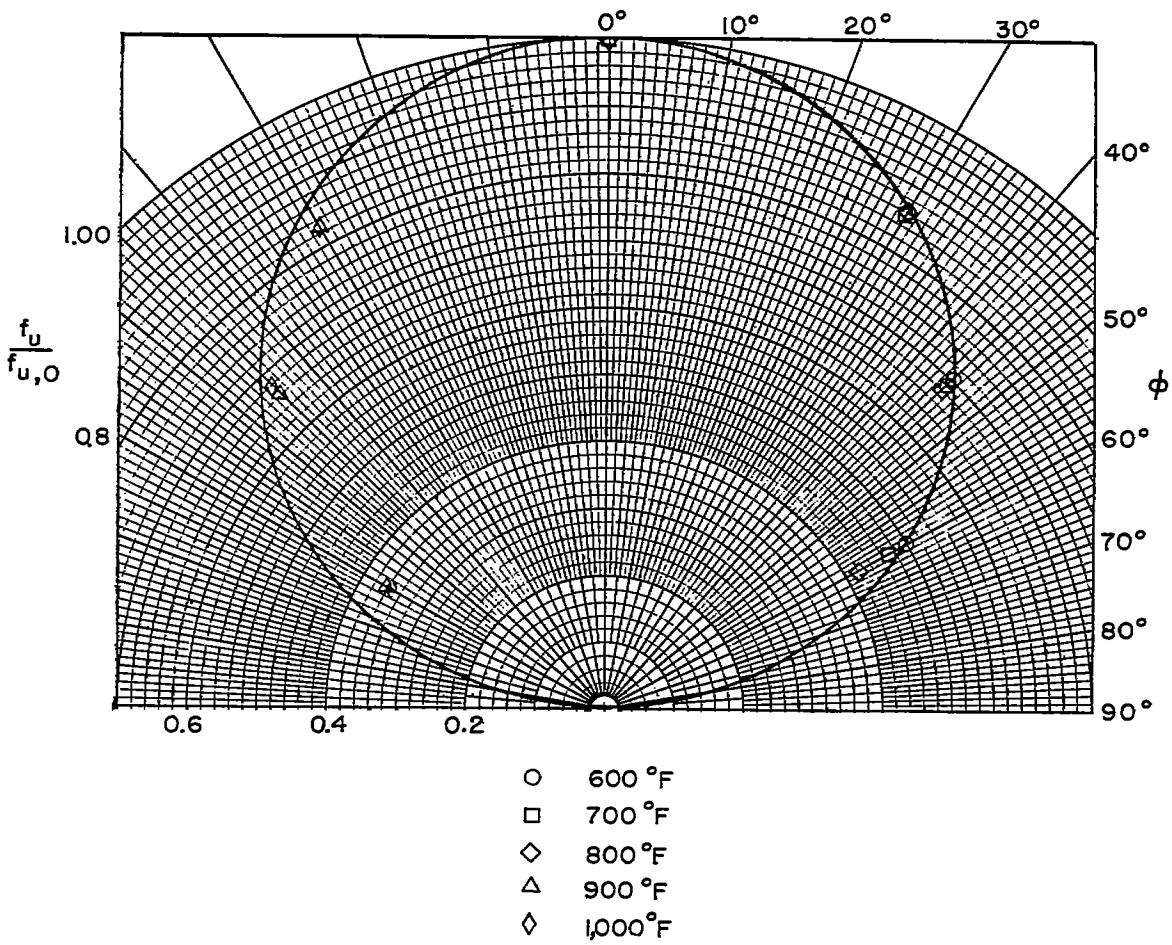

Figure 26.- Comparison of the emission of aluminum (AA 3003) oxidized 30 minutes at 1,000° F with Lambert's cosine law of diffuse emission at temperatures from 600° to 1,000° F.

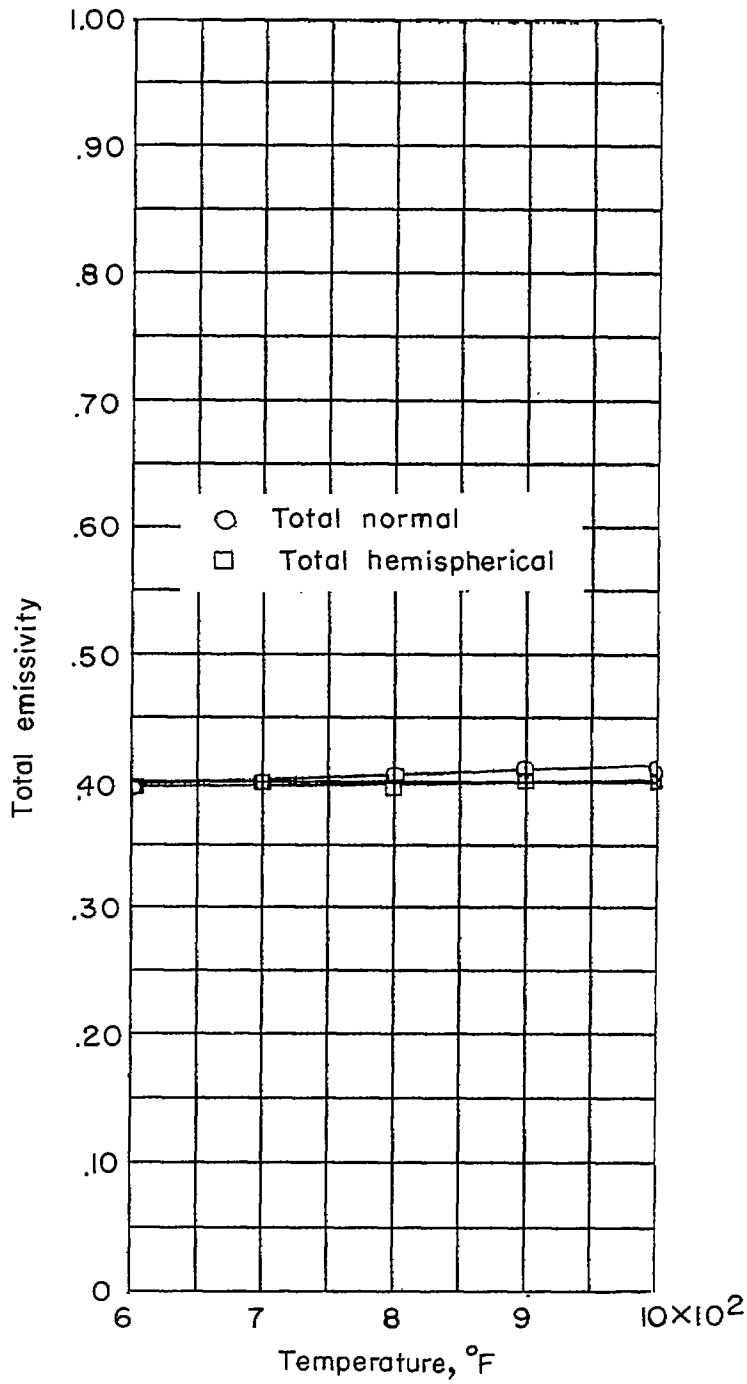

Figure 27.- Total emissivity of stably oxidized (at 1,000° F) aluminum (AA 3003) as a function of temperature.

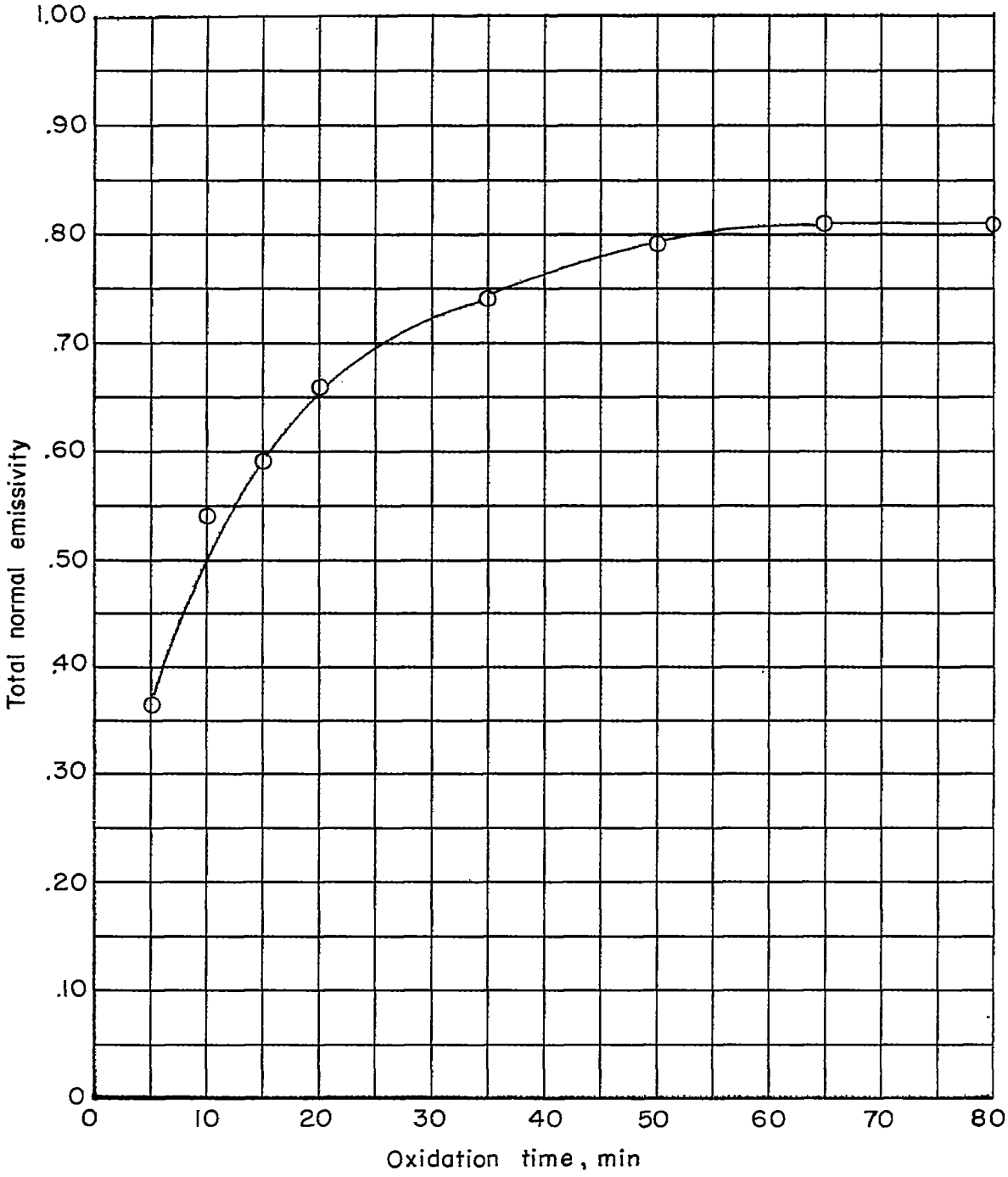

Figure 28.- Variation of total normal emissivity of molybdenum with time of oxidation at 1,000° F in quiescent air.

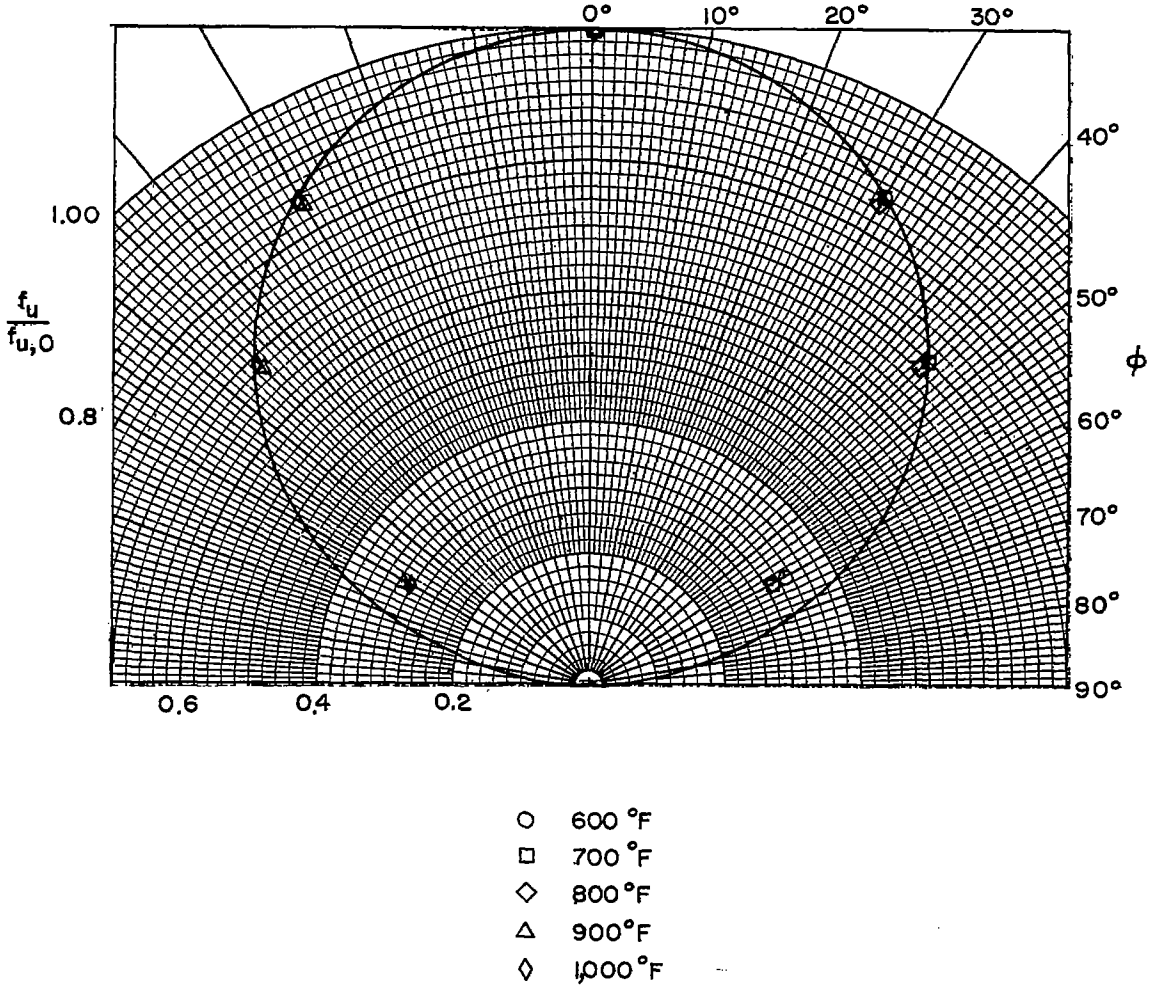

Figure 29.- Comparison of the emission of molybdenum oxidized 75 minutes at 1,000° F with Lambert's cosine law of diffuse emission at temperatures from 600° to 1,000° F.

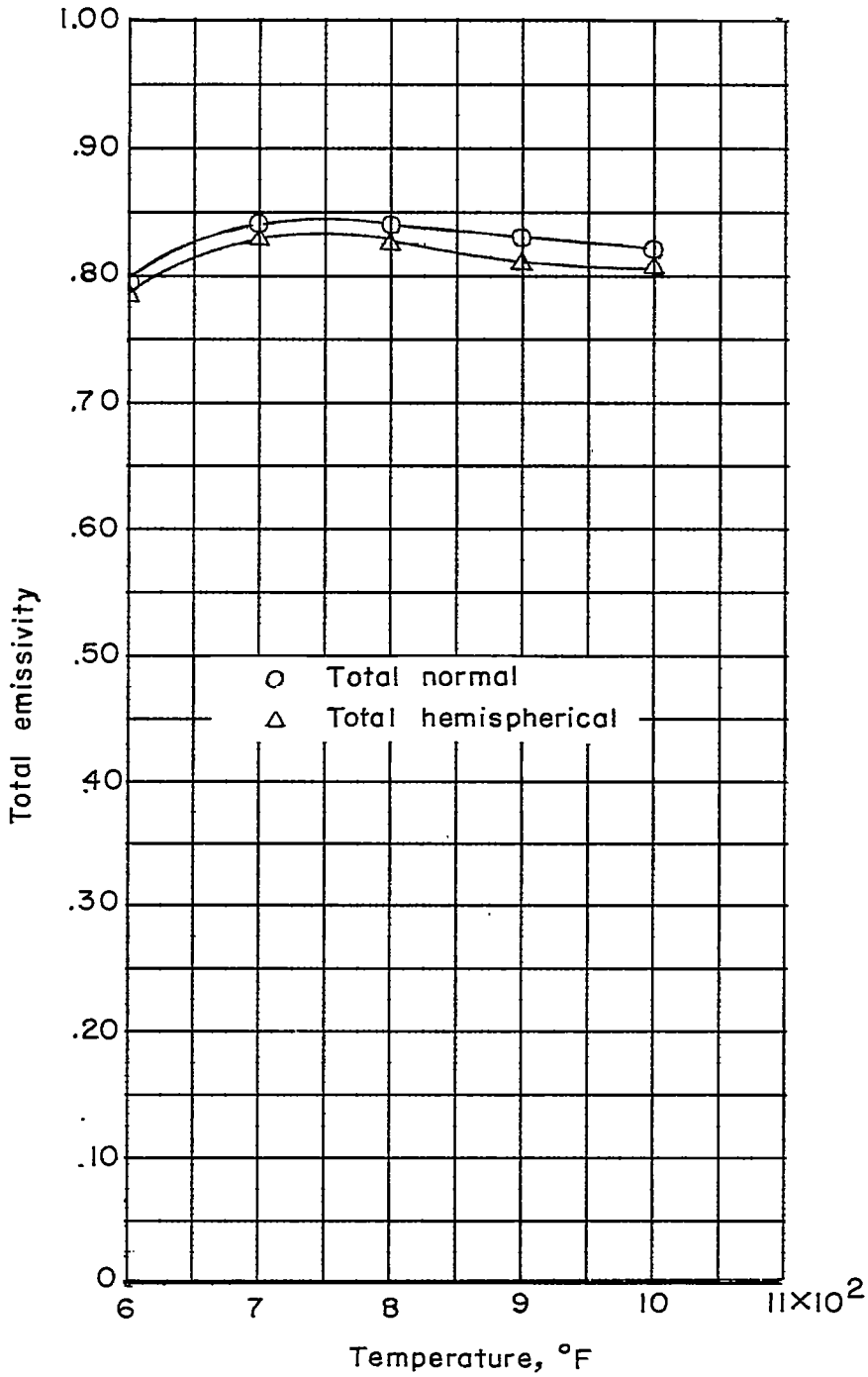

Figure 30.- Total emissivity of stably oxidized (at 1,000° F) molybdenum as a function of temperature.

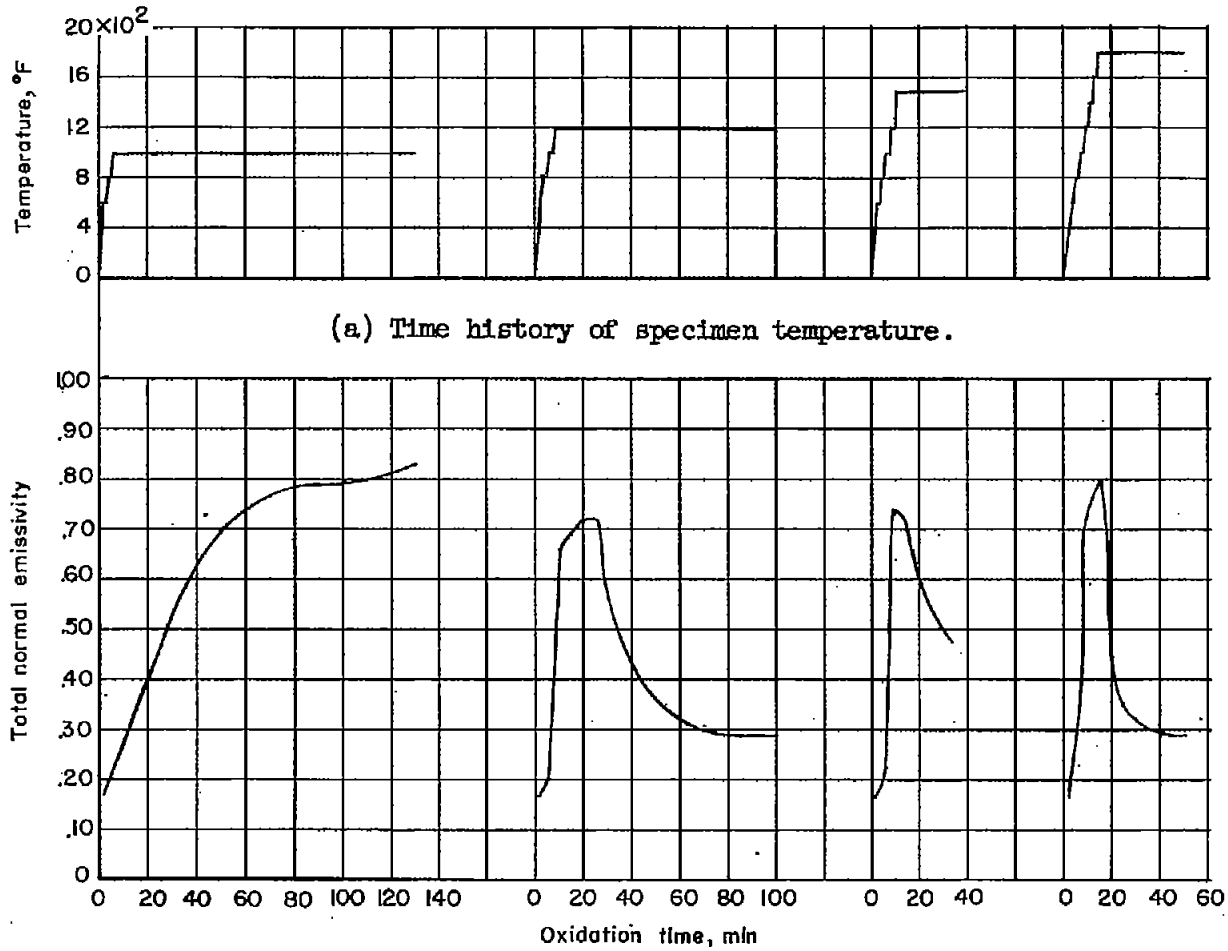

(b) Time history of total normal emissivity of initially polished specimens.

Figure 31.- Exploration of the stability of the total normal emissivity of tantalum heated in quiescent air.

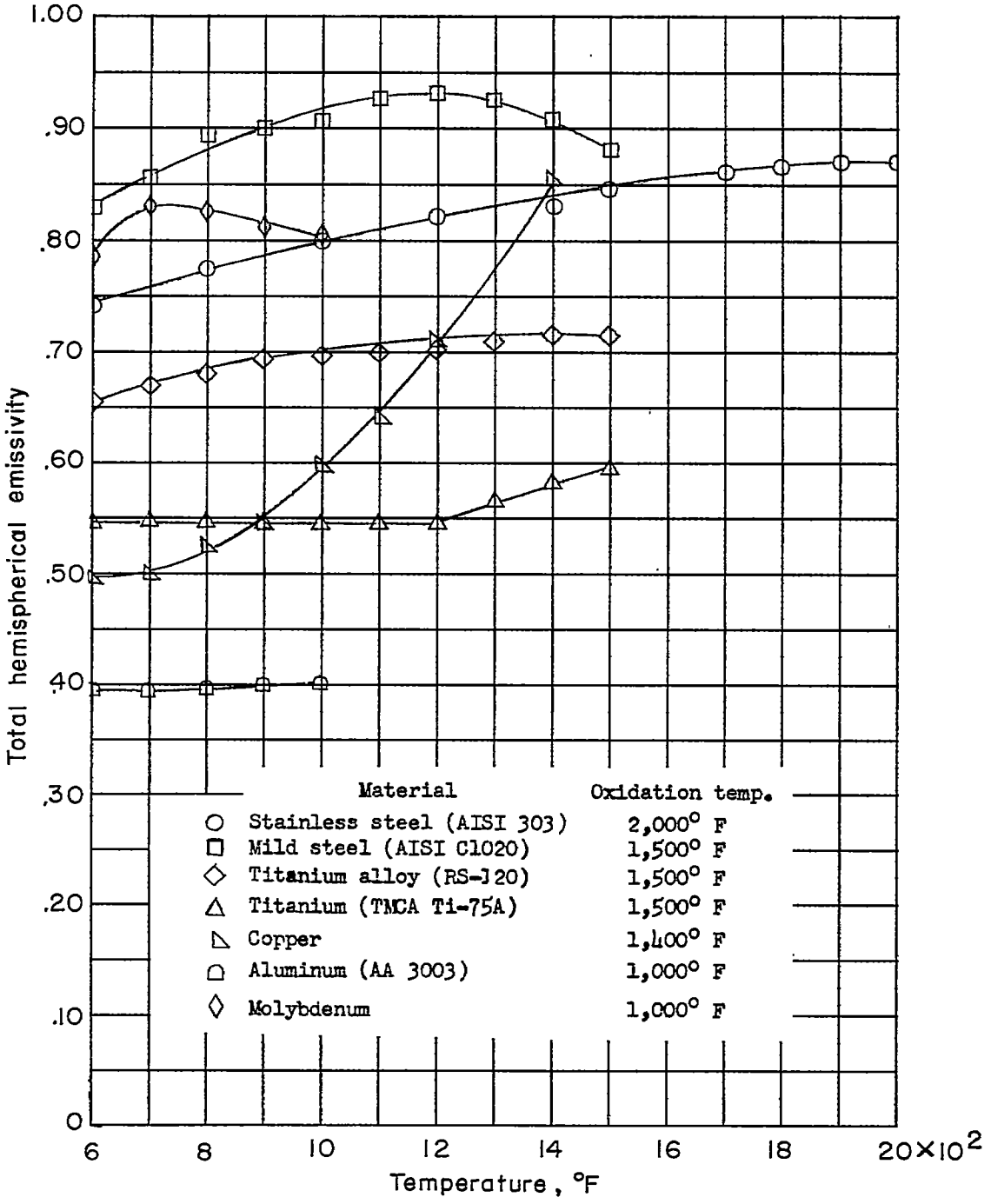

Figure 32.- Summary curves of total hemispherical emissivities shown in figures 10, 14, 18, 21, 24, 27, and 30.