NACA TN 4230 10571

TECH LIBRARY KAFB, NM
0066801

NATIONAL ADVISORY COMMITTEE FOR AERONAUTICS

TECHNICAL NOTE 4230

PRANDTL-MEYER EXPANSION OF CHEMICALLY REACTING GASES IN LOCAL CHEMICAL AND THERMODYNAMIC EQUILIBRIUM

By Steve P. Heims

Ames Aeronautical Laboratory
Moffett Field, Calif.

Washington
March 1958

AFMDC
TECHNICAL LIBRARY
AFL 2811

TECH LIBRARY KAFB, NM

0066801

1T

NATIONAL ADVISORY COMMITTEE FOR AERONAUTICS

TECHNICAL NOTE 4230

PRANDTL-MEYER EXPANSION OF CHEMICALLY REACTING GASES IN LOCAL CHEMICAL AND THERMODYNAMIC EQUILIBRIUM

By Steve P. Heims

SUMMARY

It is found that Prandtl-Meyer flow, in which chemical reactions are occurring and are in equilibrium, can be simply and exactly calculated. The property of air which governs the flow is found to be a quantity which depends only on the ratio of enthalpy to the square of the speed of sound; the analogous quantity for an inert gas depends only on the ratio of specific heats. The maximum angle through which the flow may turn is generally larger when chemical reactions are occurring than it is in nonreacting air. A numerical example shows that the pressure variation with angle, as well as temperature and Mach number variations, may be considerably affected by the presence of the chemical reaction.

INTRODUCTION

At the high temperatures encountered in hypersonic flight, the air may no longer be regarded as an inert gas. It does not have a constant ratio of specific heats, γ, nor does it generally obey the simple equation of state, $p/\rho = RT$. These thermodynamic features reflect the fact that at high temperatures molecular vibrations are excited and chemical reactions are taking place in air. Because of this, any flow solutions depending on constancy of γ and the perfect gas law are not valid.

One elementary supersonic flow solution is the Prandtl-Meyer expansion around a corner. In this paper the theory of the Prandtl-Meyer expansion is extended to include high temperature flow in chemical and thermal equilibrium. When only molecular vibrations are active, and no chemical reactions occur, one can still use the usual flow equations in terms of γ, if the appropriate function of temperature is inserted for γ (see ref. 1). However, when chemical reactions are occurring, then γ is no longer a useful concept in the Prandtl-Meyer flow.

Instead of working with γ, we shall employ a quantity η to describe the thermodynamics of the gas, because it is η and not γ which enters into the flow equations at high temperatures. When no reactions are taking place, η reduces to $(\gamma+1)/(\gamma-1)$. In the present analysis, it will be shown that by introducing also an auxiliary variable ψ, the

Prandtl-Meyer expansion can be simply and exactly calculated for equilibrium flow without employing any iterative procedures or extensive numerical integrations. However, a table or a Mollier diagram for the thermodynamic properties of air at high temperatures is required. At high temperatures, the table of reference 2 or the Mollier chart of reference 3 is suitable. At temperatures below 3000° K, reference 4 is useful.

SYMBOLS

a	speed of sound
c	a constant of motion with dimensions of velocity, defined by equation (3)
h	enthalpy per unit mass
$\hbar$	Planck's constant divided by 2π
k	Boltzmann constant
M	Mach number
p	pressure
r	radial coordinate
R	gas constant for air
S	entropy
T	absolute temperature
v	speed, $\sqrt{v_r^2 + v_\theta^2}$
v_r	component of velocity along the radius vector
v_θ	component of velocity perpendicular to the radius vector
γ	ratio of specific heats, $\frac{c_p}{c_v}$
η	parameter defined by $1 + \frac{2h}{a^2}$
θ	angular coordinate
ν	angle through which the flow has turned
ν_m	theoretical maximum value of ν
ρ	density

ψ an angle defined by equation (7)

ψ' an integration variable

Subscript

o value along the radial line on which the Prandtl-Meyer expansion begins

ANALYSIS

In the usual derivation of Prandtl-Meyer flow (ref. 5) one seeks a solution for supersonic flow for which the pressure, density, and velocity are constant along radial lines emanating from the corner around which the gas is expanding. Such a solution can exist only when no characteristic length enters into the problem. Thus when chemical relaxation occurs in the air, one cannot have such a solution. However, when the air is in equilibrium everywhere, there is no length and one may expect to find such a solution. More generally, if each of the various reactions and internal degrees of freedom of the molecules are either frozen or in chemical equilibrium, a Prandtl-Meyer type solution is expected to exist. We seek a formal solution of the Prandtl-Meyer type which is valid for any of these isentropic flows.

If we define $a^2 = \left.\frac{dp}{d\rho}\right)_S$, the variation of pressure with density at constant entropy, we obtain from the requirement of continuity and from momentum conservation the usual equations:

$$\frac{dv_r}{d\theta} = v_\theta \tag{1}$$

$$v_\theta = a \tag{2}$$

Equation (2) requires that the flow be supersonic. The energy equation is

$$\frac{1}{2} c^2 = h + \frac{v_\theta^2 + v_r^2}{2} \tag{3}$$

Combining equations (1), (2), and (3) gives the differential equation for v_r:

$$\left(\frac{dv_r}{d\theta}\right)^2 = \frac{1}{1 + (2h/a^2)} \left(c^2 - v_r^2\right) \tag{4}$$

Let θ_o be the angle at which the Prandtl-Meyer expansion begins. Then in view of equation (2), the initial radial velocity is (see sketch):

$$v_r(\theta_o) = a_o \sqrt{M_o^2 - 1} \tag{5}$$

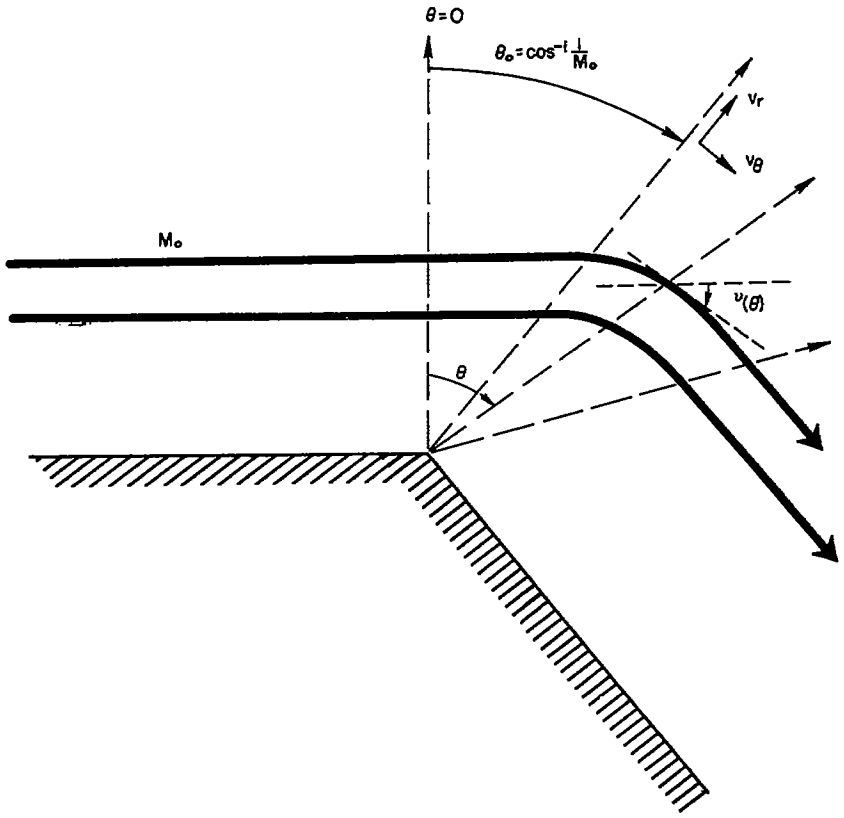

It is seen from equations (1) and (4) that, for given initial conditions, the flow is completely specified if the quantity η is known, where we define

$$\eta = 1 + \frac{2h}{a^2} \tag{6}$$

For air at moderate temperatures, the ratio of specific heats is a constant, and $\eta = (\gamma+1)/(\gamma-1) = 6$. For a diatomic gas in which the molecular vibrations are in equilibrium but no reaction is occurring, η is a function of temperature (but not of pressure) and varies from 6 at moderate temperatures to 8 at temperatures that are large compared to

$\hbar\omega/k$, where ω is the characteristic frequency of molecular vibrations. In general, when chemical reaction is also occurring, the quantity η is a function of local temperature and pressure.

In order to integrate equation (4) in this general case, it is convenient to introduce a variable $\psi(\theta)$ defined by

$$\left.\begin{aligned} \frac{d\theta}{d\psi} &= \sqrt{\eta} \\ \text{or} \qquad \theta - \theta_o &= \int_{\psi_o}^{\psi} \sqrt{\eta}\, d\psi' \end{aligned}\right\} \tag{7}$$

with

$$\psi_o = \sin^{-1}\left(\frac{v_o}{c} \sin \theta_o\right) = \sin^{-1}\left(\frac{a_o}{c}\sqrt{M_o^2 - 1}\right)$$

Then equations (4) and (5) become

$$\left(\frac{dv_r}{d\psi}\right)^2 = (c^2 - v_r^2) \tag{8a}$$

$$v_r(\psi_o) = a_o\sqrt{M_o^2 - 1} \tag{8b}$$

The solution of equation (8) is

$$v_r = c \sin \psi\ , \qquad \psi \geqq \psi_o \tag{9}$$

The other component of velocity is then in view of equations (1) and (2):

$$v_\theta = a = c\eta^{-1/2} \cos \psi \tag{10}$$

It is seen from equations (9) and (10) that when the angle ψ is $\pi/2$, the flow is purely radial and the Mach number becomes infinite. From this it follows that $\pi/2$ is the limiting value of ψ.

To compute the flow field, we notice from equation (10) that ψ can be expressed as a function of the state of the gas:

$$\psi = \cos^{-1}\left(\frac{a}{c}\sqrt{\eta}\right) \tag{11}$$

Now with equations (2), (6), (9), and (11), we can compute the flow field as a function of ψ. When chemical reaction is important the simplest procedure is to use a Mollier chart for air (ref. 3) or a set of tables (ref. 2), and regard h as the independent variable. Knowing the initial ($\psi = \psi_o$) state of the gas, and knowing that it will follow an isentrope, one takes successive increments of h, looks up corresponding values of the sound speed a, readily evaluates the right-hand side of equation (11), and thus finds the value of ψ corresponding to each h. Any of the other thermodynamic properties of the air corresponding to a particular ψ can then also be read off from the chart or table. At the lower temperatures where the molecular vibrations are active, but where the chemical reaction may be neglected, a somewhat simpler procedure is suggested by the fact that η and a are in this region functions of temperature only: Choose temperature as the independent variable (as is done in the tables of ref. 3), and look up h and a in the tables. Then equation (11) yields the value of ψ.

In any case, once ψ is known, one obtains the flow field from equations (9) and (10), and the local Mach number is given by

$$M = \sqrt{1 + (v_r/v_\theta)^2} = \sqrt{1 + \eta \tan^2\psi} \tag{12}$$

It remains to obtain the physical angle θ corresponding to the parameter ψ by performing the integration indicated in equation (7). At temperatures where molecular vibrations and chemical reaction can be neglected, this integral (for air) is simply $\theta - \theta_o = \sqrt{(\gamma+1)/(\gamma-1)}\,(\psi - \psi_o)$. Even at high temperatures $\sqrt{\eta}$ varies only slowly (as fig. 1 illustrates), and numerical evaluation of the integral (7) can be done quickly because one may take large steps, treating $\sqrt{\eta}$ as constant during each step.

This completes the solution of the Prandtl-Meyer problem; the angle the flow has turned through is given by:

$$\nu = \theta - \cos^{-1}\frac{1}{M} \tag{13}$$

(For an alternative expression see ref. 3.)

For some applications it may be desirable to have an explicit analytic expression for the density as a function of ψ. Such an expression can be obtained by integrating the continuity equation, $(d\rho v_\theta/d\theta) + \rho v_r = 0$ (see ref. 5). The integration is performed with the help of equations (7), (9), and (10). It yields:

$$\frac{\rho(\psi)}{\rho(\psi_o)} = \left(\frac{\cos\psi}{\cos\psi_o}\right)^{\eta_o-1}\left(\frac{\eta}{\eta_o}\right)^{1/2} e^{\int_{\psi_o}^{\psi}(\eta_o-\eta)\tan\psi'\,d\psi'} \tag{14}$$

The usual "constant γ" solution is obtained when $\eta = \eta_o = (\gamma+1)/(\gamma-1)$. A numerical table of h and a permits fitting $(\eta_o - \eta)/\eta_o$, the local deviation from constancy, by a simple sine series with integer multiples of $\psi'-\psi_o$ as the argument. The integral in equation (14) is then of an elementary type. In the special case where M_o is unity, the integral in equation (14) may be put equal to zero for small angles ψ.

NUMERICAL EXAMPLE AND GENERAL QUALITATIVE FEATURES

A numerical example of Prandtl-Meyer flow is presented graphically in figures 1 to 5. A set of initial conditions were chosen at which the difference between frozen and equilibrium flow is marked, and at the same time is in the region which is of interest for high-altitude flight. It corresponds to the stagnation conditions at an altitude of about 130,000 feet with a flight velocity of 19,000 feet per second. The frozen flow was taken as a flow in which only the random translations and molecular rotations keep up with equilibrium, but the chemical reaction and the energy of the molecular vibrations are frozen at the values they have at the point where the Prandtl-Meyer expansion begins. The initial thermodynamic state (pressure, temperature, density) at a Mach number of unity is taken to be the same in the frozen and equilibrium case. This requires that the initial sound speed and the flow velocity are different in the frozen case than in the equilibrium case. The sound speed, $\sqrt{\left(\frac{dp}{d\rho}\right)_S}$, is different in the two cases because the variation of pressure with density is different, even though the initial thermodynamic states are identical. This difference in sound speed results in a significant difference in the initial value of η (see fig. 1).

Several qualitative features of the relation between equilibrium flow (large η) and frozen flow (small η) can be seen from the present analysis and from the figures. Because of the simple geometry, we restrict ourselves in the following comments to the important type of flow in which the expansion begins with sonic velocities, even though all of the foregoing equations are valid for any initial Mach number not less than unity.

The Maximum Turning Angle

The maximum angle through which the flow may turn corresponds to $\psi = \pi/2$ and is given by

$$\nu_m = \int_0^{\pi/2} \sqrt{\eta}\, d\psi - \frac{\pi}{2} \tag{15}$$

When η is constant, equation (15) reduces to

$$\nu_m = (\sqrt{\eta} - 1)\frac{\pi}{2} \tag{15a}$$

Even when η is not constant, equation (15a) is evidently approximately equal to equation (15), provided a suitably averaged value of $\sqrt{\eta}$ is used. For frozen undissociated flow $\eta = 6$ and $\nu_m = 129.3^\circ$. However, for flow with chemical reaction (see fig. 1), the averaged value of η may be larger than 9 and consequently the maximum angle ν_m is larger than 180°. This shows that at high temperatures and pressures, equilibrium flow might have to make more than a 180° turn before the theoretical limit is reached.

The Mach number, pressure, density, and temperature all take on their limiting values (M becomes infinite, T, p, and ρ become zero, for the ideal gas model)[1] at $\nu = \nu_m$. This fact is reflected in all the figures 2 to 5 in that for the larger turning angles the small η values of p, T, ρ, and M have changed more from their initial value, than the large η curves.

Density

An interesting feature of the density curve (fig. 2) is that the equilibrium value is <u>not</u> everywhere higher than the frozen value of density, but its initial slope is steeper and the two curves then must cross, because from the above comment about ν_m we know that the density for the frozen case has to reach zero much sooner than the equilibrium curve. It will usually be true that for the equilibrium flow the density decreases initially more rapidly than for the frozen flow. This can be proved rigorously from equation (14), if the equilibrium flow is identified with a certain value of η_o and a nonpositive value of $\left.\frac{\partial\eta}{\partial\theta}\right)_{\theta=0}$ and the frozen flow is identified with a relatively smaller and a constant η_o (see appendix).

[1]The point here is not so much that T = 0 and p = 0 at ν_m; in fact the ideal gas model breaks down completely at temperatures where the air begins to liquefy. For example, near T = 0 the specific heats are zero, and do not have the constant values associated with ideal gases at room temperature. The point is, more precisely, that the ν corresponding to the state of the air in which the ideal gas laws break down is much larger in the large η case than in the small η flow. In the text the simpler statement is preferred; however, all of the <u>equations</u> in this paper are generally valid and do not depend on any specific gas model.

Pressure

First of all one sees from figure 3 that unlike the density curve the equilibrium values for pressure are always higher than the frozen ones. Moreover the equilibrium and frozen pressure curves are well separated, much more so than the density curves. For example at $\nu = 70^{\circ}$ the equilibrium pressure is nine times as large as the frozen pressure. The corresponding ratio of the densities is 2.

The point of interest is that in a Prandtl-Meyer expansion the pressure is quite sensitive to the chemical reaction, much more so than the density. This is just the opposite of what occurs in the compression by a normal shock, in which the pressure ratio is very insensitive to any chemical reaction, but the density ratio is not.

Mach Number and Turning Angle

The local Mach number variation and its strong dependence on η in the example are shown in figure 4. The more general qualitative variation of Mach number and turning angle can be derived from equations (12), (13), and (7). It is seen from these equations that for a given angle θ, the Mach number and ν depend on the local value of η, as well as on its value for smaller θ, but they depend on no other parameters. The difference between frozen and equilibrium flow may be analyzed as arising (a) from the fact that η is usually larger in the equilibrium case and (b) that it is not constant in the equilibrium case. The effect (a) is seen from equation (12), and may be stated in words: The larger the (constant) value of η the smaller the value of the local Mach number at any fixed θ, and the larger the corresponding turning angle $\nu(\theta)$. It follows that the larger the value of η, the smaller the Mach number at any given turning angle ν. As to the effect (b) due to the variation of $\eta(\theta)$ with θ, it may be stated in words as follows: If $\eta(\theta)$ is a monotonically decreasing function, then the actual Mach number at a point θ_1 for equilibrium flow is smaller and $\nu(\theta_1)$ is larger than it would be for a flow which is characterized by the constant value of $\eta = \eta(\theta_1)$. It follows that for any fixed ν, the Mach number is smaller than for the flow characterized by the constant $\eta = \eta(\theta_1)$.

Ames Aeronautical Laboratory
National Advisory Committee for Aeronautics
Moffett Field, Calif., Dec. 2, 1957

APPENDIX

THE DENSITY AT VERY SMALL ANGLES

We wish to consider two flows initially at $M = 1$ and at the same density (which we choose as our unit of density), but with different initial values of η, η_{o_1} and η_{o_2}. Also generally the derivatives $g_1 \equiv \left.\frac{d \log \eta_1}{d\theta}\right)_{\theta_o}$ and $g_2 \equiv \left.\frac{d \log \eta_2}{d\theta}\right)_{\theta_o}$ will be different. We ask the question: Under what conditions will the density ρ_1 of flow 1 be smaller than that of flow 2 for small angles?

Expansion of equation (14) for small angles θ yields:

$$\rho_1 - \rho_2 = \left[\frac{\theta}{2} - \frac{(g_1 + g_2)\theta^2}{8}\right](g_1 - g_2) + \frac{\theta^2}{2}\left(\frac{\eta_{o_2} - \eta_{o_1}}{\eta_{o_1}\eta_{o_2}}\right) + O(\theta^3)$$

From this expression it is seen that the condition that ρ_1 be less than ρ_2 for sufficiently small θ is either

$$g_1 < g_2$$

or

$$g_1 = g_2 \; ; \qquad \eta_{o_1} > \eta_{o_2}$$

In the example given here, where ρ_1 represents equilibrium flow and ρ_2 frozen flow, one has $g_1 < g_2 = 0$, as well as $\eta_{o_1} > \eta_{o_2}$.

REFERENCES

1. Ames Research Staff: Equations, Tables, and Charts for Compressible Flow. NACA Rep. 1135, 1953.

2. Hilsenrath, Joseph, and Beckett, Charles W.: Tables of Thermodynamic Properties of Argon-Free Air to 15,000° K. AEDC TN 56-12, NBS, Sept. 1956.

3. Feldman, Saul: Hypersonic Gas Dynamics Chart for Equilibrium Air. AVCO Research Lab., Jan. 1957.

4. Hilsenrath, Joseph, et al.: Tables of Thermal Properties of Gases. NBS Circular 564, Nov. 1955.

5. Taylor, G. I., and Maccoll, J. W.: The Mechanics of Compressible Fluids. Vol. III of Aerodynamic Theory, div. H, ch. IV, sec. 5, W. F. Durand, ed., Julius Springer (Berlin), 1943, pp. 243-246.

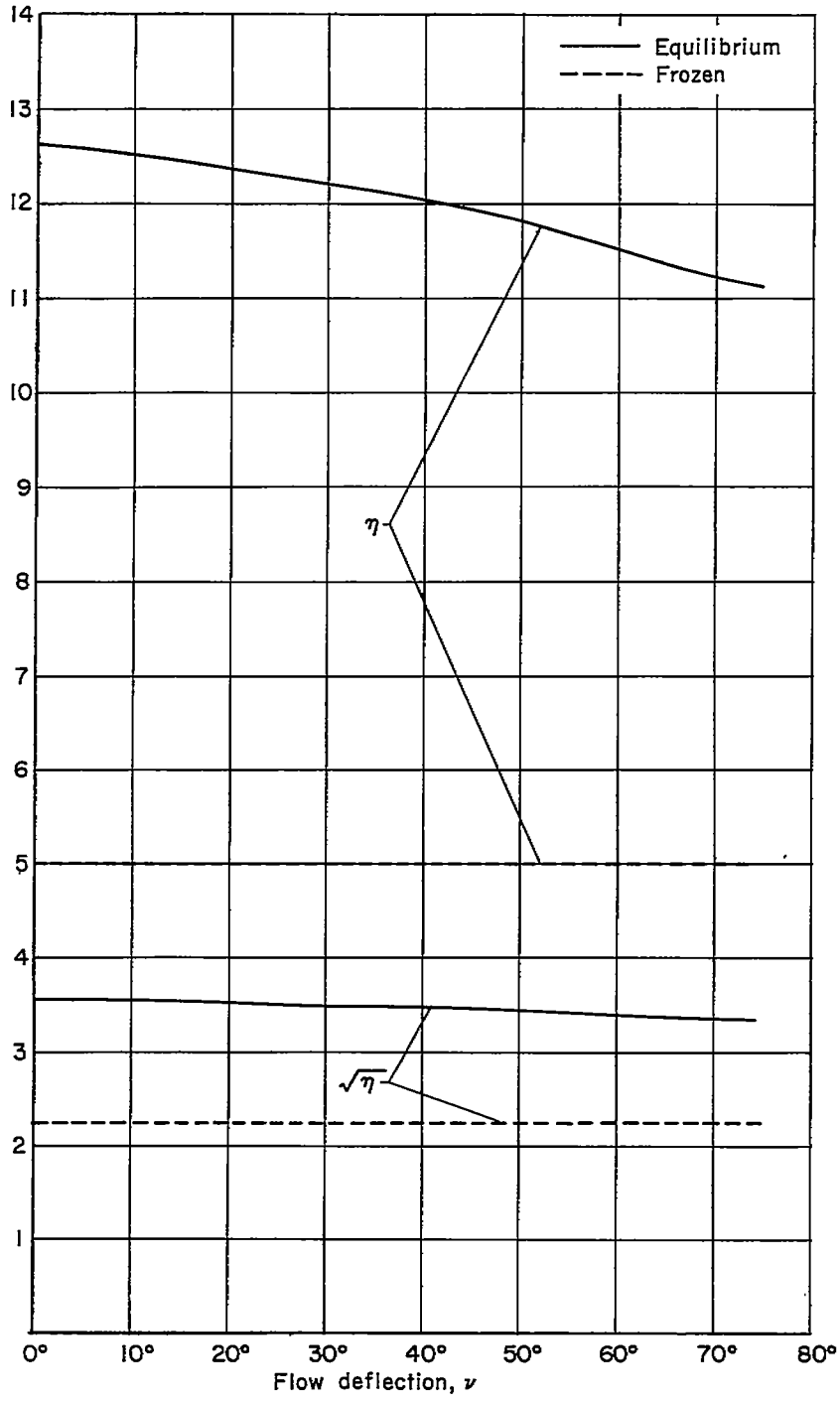

Figure 1.- Comparison of $\eta = 1 + \frac{2h}{a^2}$ and $\sqrt{\eta}$ for frozen and equilibrium Prandtl-Meyer flow; $M_o = 1.00$, $T_o = 6140^\circ$ K, $p_o = 1.2$ atmospheres.

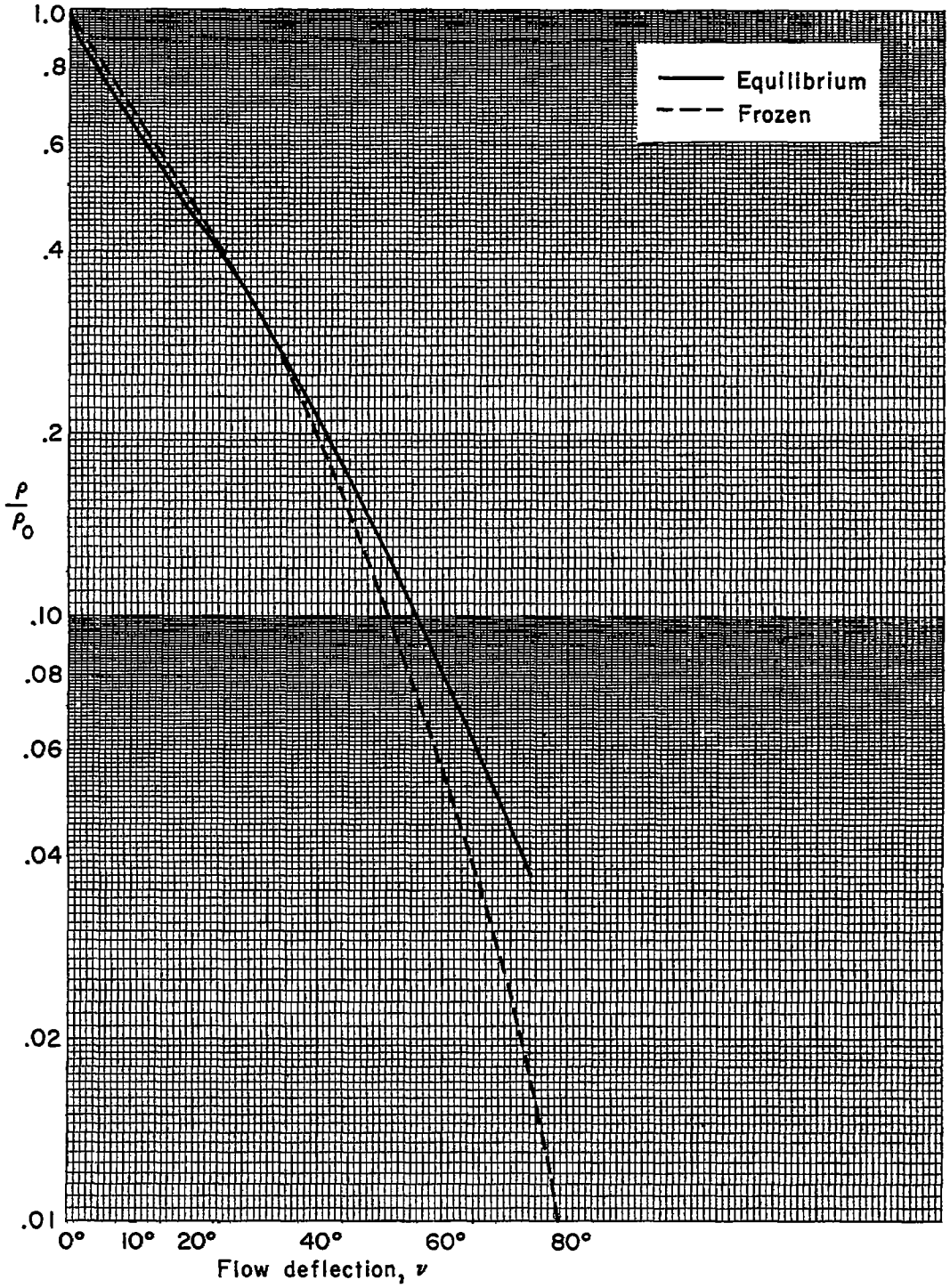

Figure 2.- Comparison of density for frozen and equilibrium Prandtl-Meyer flow; $M_o = 1.00$, $T_o = 6140^\circ$ K, $p_o = 1.2$ atmospheres.

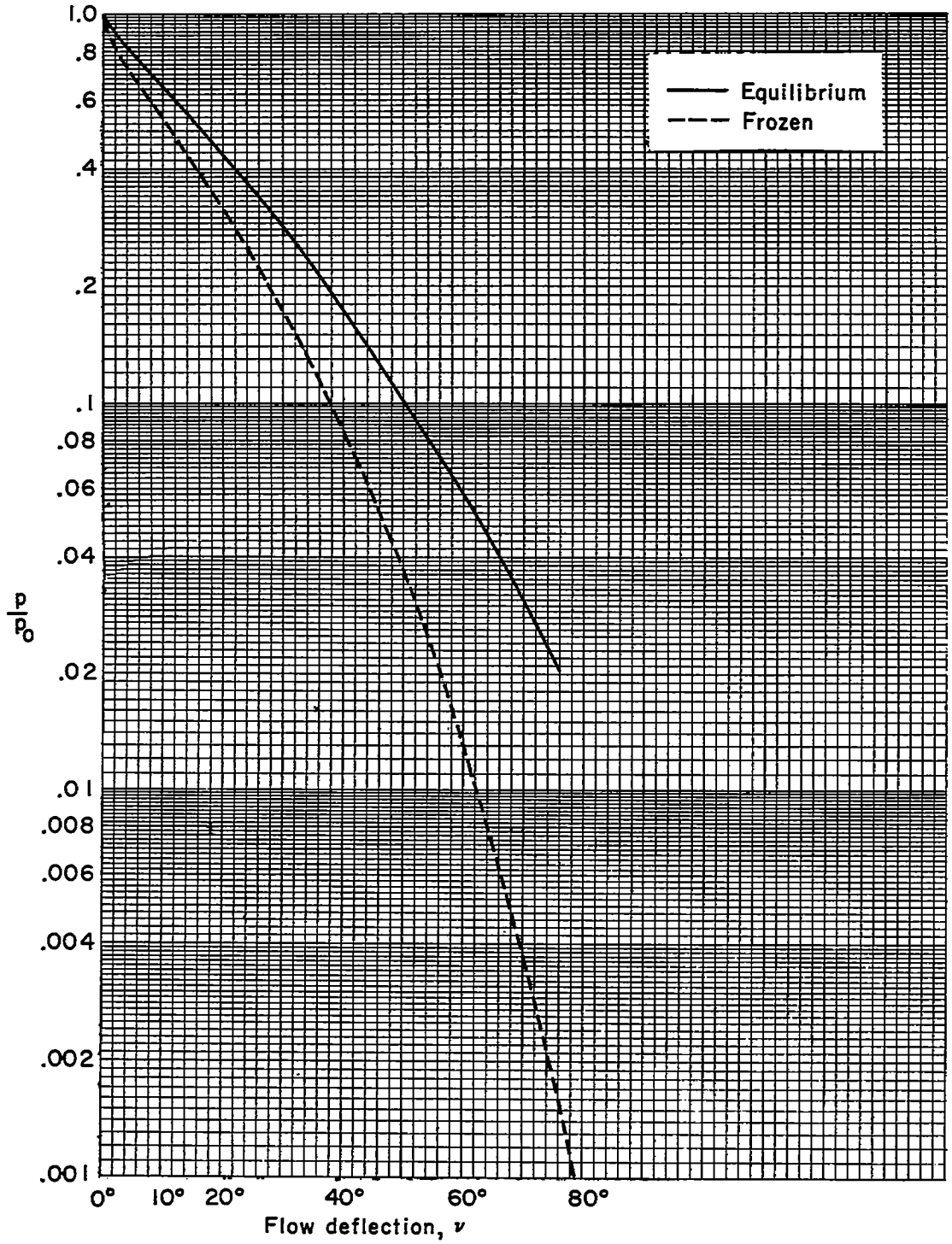

Figure 3.- Comparison of pressure for frozen and equilibrium Prandtl-Meyer flow; $M_o = 1.00$, $T_o = 6140^\circ$ K, $p_o = 1.2$ atmospheres.

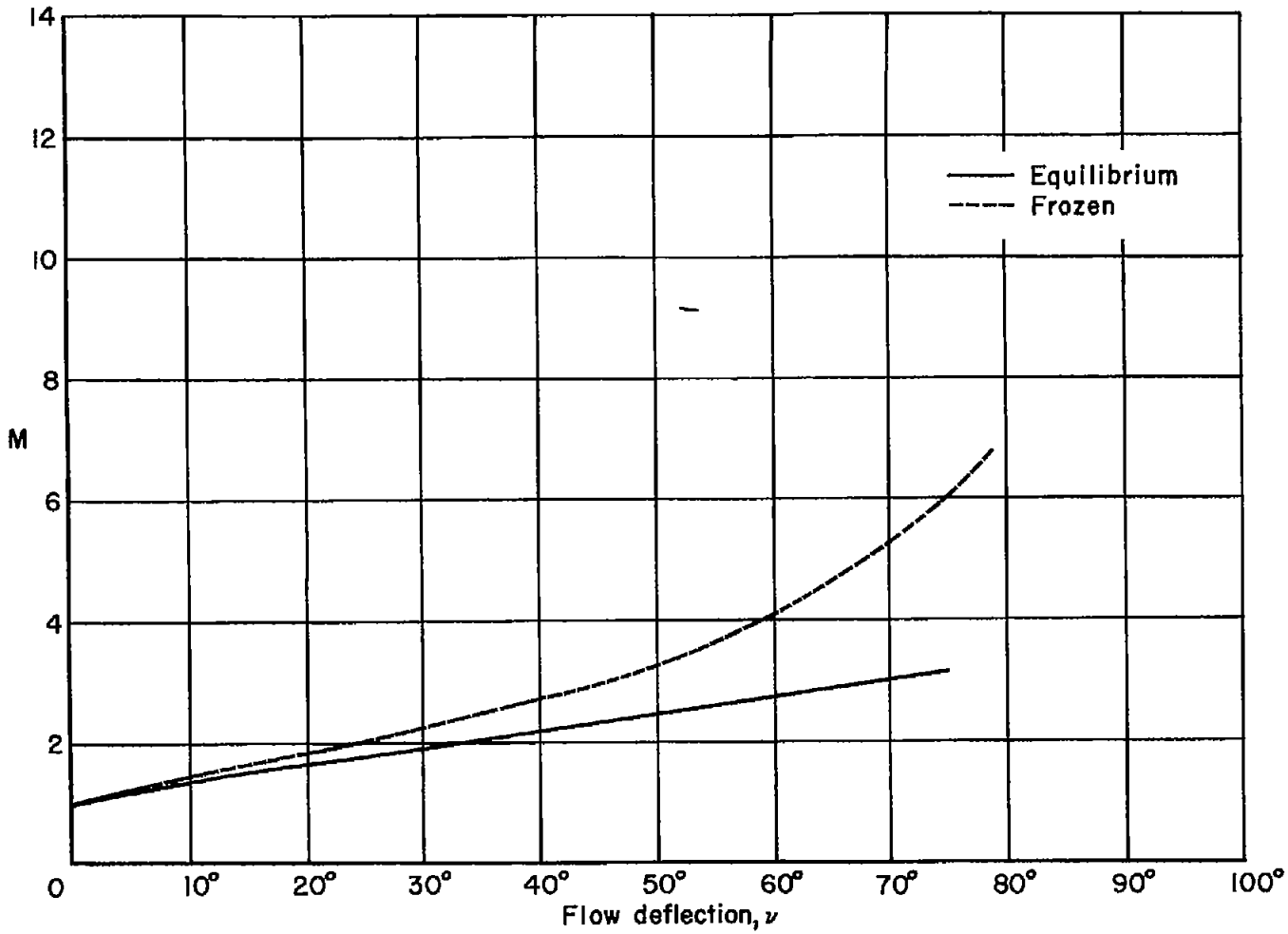

Figure 4.- Comparison of Mach number for frozen and equilibrium Prandtl-Meyer flow; $M_o = 1.00$, $T_o = 6140^\circ$ K, $p_o = 1.2$ atmospheres.

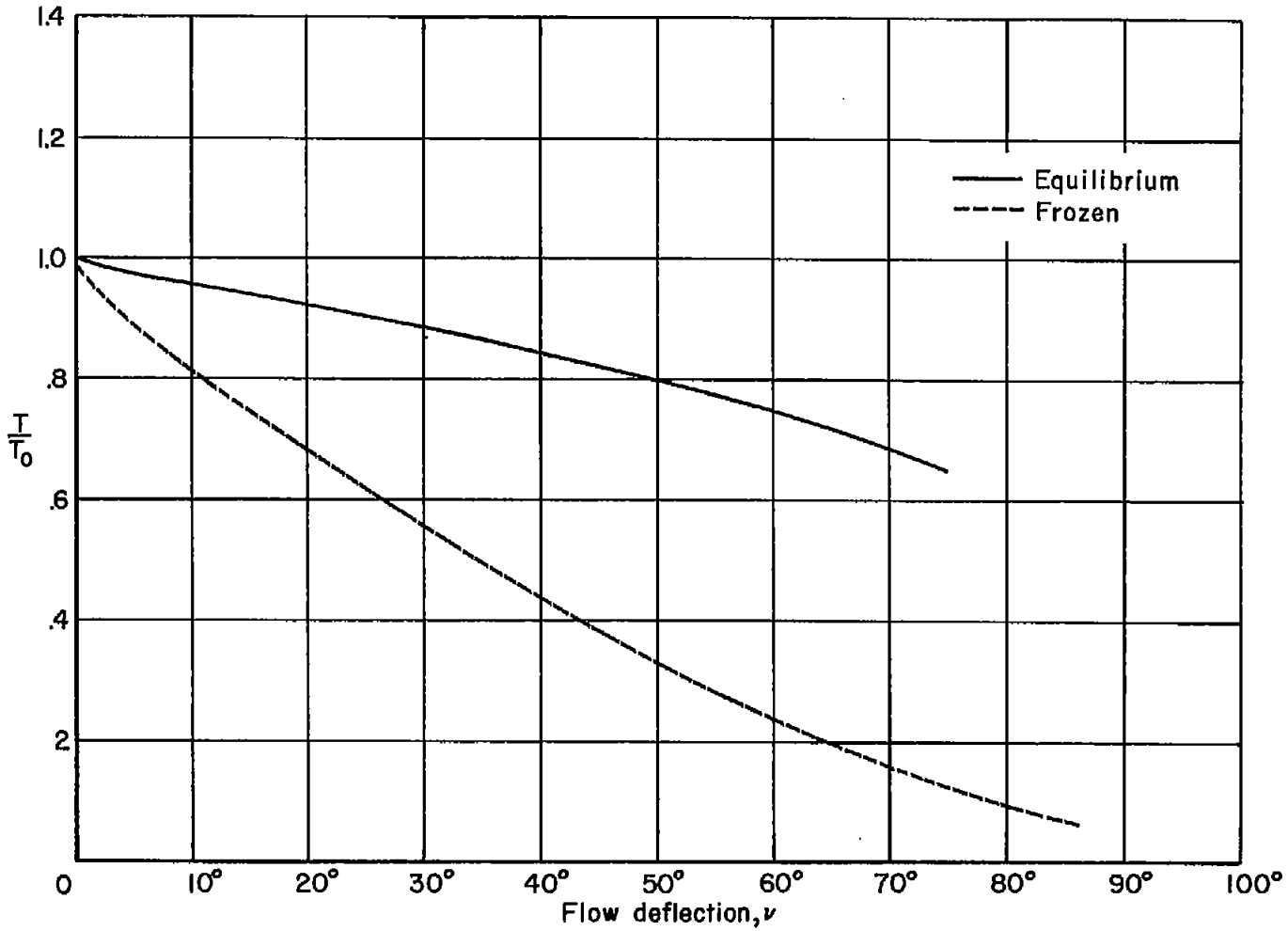

Figure 5.- Comparison of temperature for frozen and equilibrium Prandtl-Meyer flow; $M_o = 1.00$, $T_o = 6140^\circ$ K, $p_o = 1.2$ atmospheres.

NACA - Langley Field, Va.