NACA TN 4277 10619

TECH LIBRARY KAFB, NM
0066922

NATIONAL ADVISORY COMMITTEE FOR AERONAUTICS

TECHNICAL NOTE 4277

A BODY MODIFICATION TO REDUCE DRAG DUE TO WEDGE ANGLE OF WING WITH UNSWEPT TRAILING EDGE

By William C. Pitts and Jack N. Nielsen

Ames Aeronautical Laboratory
Moffett Field, Calif.

Washington

July 1958

AFMDC
TECHNICAL LIBRARY

TECH LIBRARY KAFB, NM
0066922

T

NATIONAL ADVISORY COMMITTEE FOR AERONAUTICS

TECHNICAL NOTE 4277

A BODY MODIFICATION TO REDUCE DRAG DUE TO WEDGE ANGLE OF WING WITH UNSWEPT TRAILING EDGE

By William C. Pitts and Jack N. Nielsen

SUMMARY

Ward's slender-body-theory formula for zero-lift drag contains three integrals plus a base-drag term. Two of these integral terms depend only upon the cross-sectional area distribution of the body. The third integral term depends only upon the body shape and axial slopes at the base of the body. This term is neglected in the transonic area rule because in many cases it is zero; however, there are also many cases in which it is not zero. This paper examines the term for the possibility of drag reduction for a particular case. The model considered consists of a body of revolution in combination with any wing that has an unswept trailing edge and a constant trailing-edge angle along its span. It is found that (neglecting any change in base drag) a drag reduction is obtainable which, for the case considered, is an additional 12 percent of that obtained with the area-rule modification. The probable effect of viscosity on this theoretical result is discussed.

INTRODUCTION

The transonic area rule (ref. 1) relates the drag of a configuration and the drag of an equivalent body of revolution having the same area distribution. Engineering methods have been developed from the area rule for calculating the drag of airplanes and missiles at zero angle of attack. The basis of the area rule in slender-body theory can be investigated by studying Ward's drag formula (ref. 2). It is found that the equivalent-body concept holds rigorously only if certain conditions at the base of the body are met, and if the trailing edge of the wing is swept or cusped. Frequently these conditions are violated, as pointed out in references 3 and 4, and additional drag is obtained above that of the equivalent body. Berndt (ref. 3) states that two bodies have the same drag only if in addition to being equivalent in the sense of the area rule they have the same cross-sectional contour at the base and the same streamwise slope around that contour. In reference 3, Berndt investigates how the difference in drag between equivalent bodies depends upon the difference in base shape. The important conclusion is that, within the limitations of his approximate theory, the drag of a slender body having a finite cross-sectional slope at the base may be considerably reduced by spreading out the base

contour from a circle without changing the distribution of cross-sectional area. Lighthill (ref. 4) has evaluated the drag increment over that of the equivalent body of revolution for planar and cruciform wings with unswept trailing edges alone and in combination with cylindrical body.

It is clear from references 3 and 4 that the body shape given by the transonic area rule does not give the minimum possible theoretical drag for all configurations. An example is a wing-body combination for which the wing trailing edge is uncusped and lies in the plane of the body base. The purpose of the present paper is to determine (within the accuracy of Ward's drag formula) how much the drag of this wing-body combination can be reduced by modifying the streamwise slopes of the body at the base. Since viscosity can have an important effect on the reality of the inviscid-fluid-theory results presented herein, the probable effect of viscosity is discussed.

SYMBOLS

a	body radius at $x = l$
$a_0(x)$, $b_0(x)$	parameters in φ_B
$a_2(x)$, $a_4(x)$, ...	parameters in φ_m expansion
b	wing semispan at $x = l$
c	wing root chord
C_p	pressure coefficient
D	drag
ΔD	drag after adding shape modification minus drag before adding shape modification
$d_0(x)$, $d_2(x)$, ...	parameters in φ_W expansion
$f_0(x)$, $f_2(x)$, ...	parameters in φ_1 expansion
$g_2(x)$, $g_4(x)$, ...	slope-amplitude function for shape modification
l	length of wing-body combination

m,n	positive integers
q	free-stream dynamic pressure
$\mathbb{R}$	real part of complex function
$R(x)$	surface of basic body
$R(x,\theta)$	surface of body with shape modification
s	length of arc along contour
$S(x)$	cross-sectional area of model at x
V	free-stream velocity
x,r,θ	cylindrical coordinates (see sketch (b))
x_1	axial distance from leading edge of wing root
X	complex number in $x = l$ plane
$Z(x,y)$	upper wing surface
ξ	dummy variable of integration
φ	perturbation velocity potential
$\frac{\partial\varphi}{\partial n}$	outward velocity component normal to surface

Subscripts

A	potential after adding shape modification
B	basic body plus area-rule modification
C	basic-model combination
i	interference between wing and cylinder of radius a
m	shape modification
W	wing

Superscripts

$'$ first derivative with respect to x

$''$ second derivative with respect to x

PHYSICAL CONSIDERATIONS

The general statements of the Introduction can be given specific meaning if the drag formula of Ward is considered.

$$\frac{D}{q} = -\frac{1}{2\pi}\int_0^l\int_0^l \log\left|\frac{x-\xi}{l}\right| S''(x)S''(\xi)d\xi\,dx + \frac{S'(l)}{2\pi}\int_0^l \log\left(1-\frac{\xi}{l}\right)S''(\xi)d\xi -$$

$$\frac{1}{V^2}\left(\oint_C \varphi\frac{\partial\varphi}{\partial n}ds\right)_{x=l} - C_{p_{Base}}S(l) \tag{1}$$

The first two terms depend only on the distribution of cross-sectional area along the length of the wing-body combination. The third term depends only on the shape of the wing-body combination in the crossflow plane of the trailing edge (contour C in sketch (a)) and the streamwise

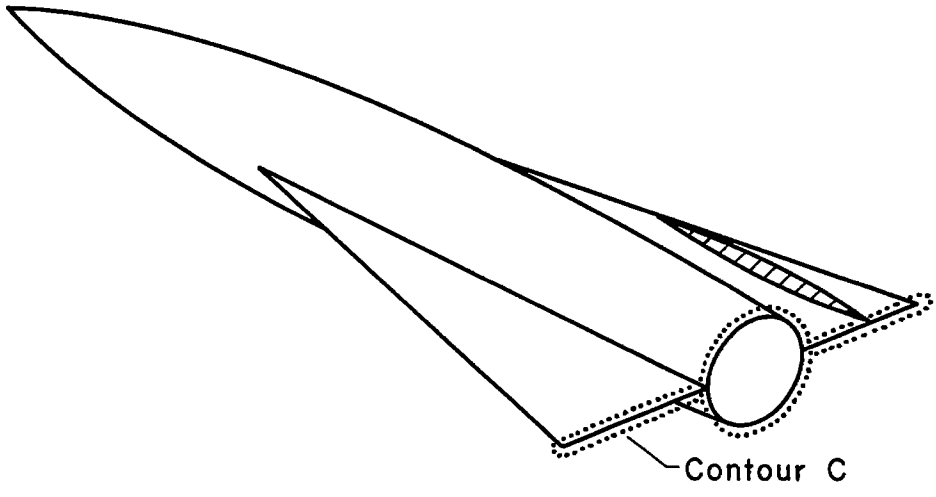

Sketch (a)

slopes of the wing and body surfaces approaching the trailing edge. The last term is the base drag which is not considered, although some of the body shape changes considered might possibly induce significant base-pressure changes.

Since the first two terms of equation (1) depend only on the area distribution, they represent the drag of the equivalent body. Frequently, however, only the first term is used in engineering methods for calculating wave drag based on the equivalent body concept. It is, therefore, important to know when all terms (other than base drag) but the first are zero. Two cases can readily be found. The first case is that of a body with a pointed base, or a wing with a cusped or swept trailing edge. Then $S'(l)$ is zero and the contour C is zero. The second case occurs when the body and/or wing is tangent to the cylindrical extension of the contour C. In this case the second term is zero because $S'(l) = 0$ and the third term is zero because $\partial\varphi/\partial n = 0$. For other configurations, the second and third terms usually contribute to the drag.

The purpose of this paper is to investigate what drag savings are theoretically possible through control of the third term. This is done by modifying the streamwise slopes of the body on contour C without changing the body cross-sectional area. The streamwise slopes forward of $x = l$ can be chosen arbitrarily to fair into those at $x = l$ without affecting the drag. The first two terms of equation (1) are unaffected.

ANALYSIS

Velocity Potentials

The basic model and coordinate system used in the analysis are shown in sketch (b). Only the shape and slopes of the model in the $x = l$

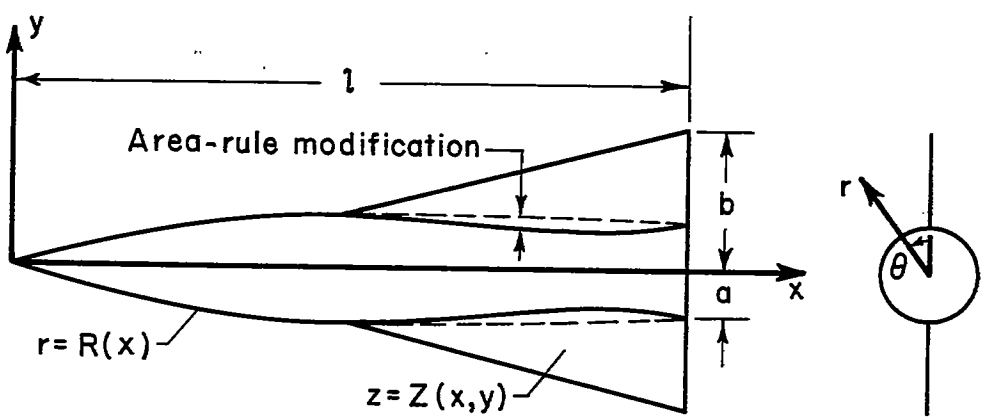

Sketch (b)

plane need be specified. The model shape forward of $x = l$ is arbitrary except that the model must be slender in the sense of Ward's theory. The area-rule modification is included in the basic model. To simplify the analysis, the case in which the wing-trailing-edge angle is a finite constant along the span is considered.

The perturbation velocity potential in the crossflow plane of the basic model can be written in the form

$$\varphi_C = \varphi_W + \varphi_B + \varphi_i \tag{2}$$

where φ_W is the potential of the wing alone (including the portion blanketed by the body), φ_B is the potential of the body plus the area-rule modification, and φ_i is the interference potential that cancels wing-alone components of velocity through the body surface. To φ_C there is added a shape modification potential, φ_m. As previously discussed, the purpose for the shape modification is to modify the streamwise slopes of the body at $x = l$ in such a manner as to reduce the drag of the wing-body combination. For a reason which is subsequently pointed out, the restriction is placed on the shape modification that the body cross section at $x = l$ must be a circle. This is not a serious restriction because any meridian slope distribution can be faired into a circular base by properly shaping the body forward of the base. The potential, φ_m, can be added directly to φ_C provided it does not violate the boundary condition of no flow through the wing and body surfaces.

The wing-alone velocity potential in the crossflow plane, $x = l$, is

$$\varphi_W = \frac{V}{\pi} Z'(l)\mathbb{R}[(X+b)\log(X+b)-(X-b)\log(X-b)-2b] \tag{3}$$

where $X = re^{i\theta}$ is the complex variable in the crossflow plane. The other potential components, φ_B, φ_i, and φ_m, are obtained from the general slender-body potential

$$\varphi = a_o(x)\log r + b_o(x) + \sum_{m=1}^{\infty} \frac{a_m(x)}{r^m} \cos m\theta \tag{4}$$

This series converges for r greater than the body radius. This is the exact slender-body theory potential only for body cross sections which are circular. For this reason the restriction is put on the body shape modification that the base of the body shall remain circular.

The parameters $a_o(x)$ and $b_o(x)$ are functions only of the model cross-sectional area distribution. The parameters $a_m(x)$ depend only upon the streamwise slope distribution of the body. Therefore, the potential of the body plus the area-rule modification is of the form

$$\varphi_B = a_o(x)\log r + b_o(x) \tag{5}$$

and the shape modification potential is of the form

$$\varphi_m = \sum_{m=1}^{\infty} \frac{a_m(x)}{r^m} \cos m\theta \tag{6}$$

The parameters $a_m(x)$ are determined from the boundary condition

$$\left(\frac{\partial \varphi_m}{\partial r}\right)_{r=a} = VR'(x,\theta)$$

Then,

$$-\sum_{m=1}^{\infty} \frac{m a_m(x)}{a^{m+1}} \cos m\theta = VR'(x,\theta)$$

This suggests a shape modification of the form

$$R'(x,\theta) = \sum_{m=1}^{\infty} g_m(x) \cos m\theta$$

where $g_m(x)$ is a slope amplitude function. To the order of accuracy of Ward's formula (eq. (1)) this type modification meets the requirement of no body cross-sectional area change, and if only even values of m are taken, it satisfies the boundary condition of no flow through the wing surface. Even values of m are also required for symmetrical flow about the (x-z) plane. Then,

$$\varphi_m = \sum_{n=1}^{\infty} \frac{a_{2n}(x)}{r^{2n}} \cos 2n\theta \tag{7}$$

with

$$a_{2n}(x) = -V \frac{a^{2n+1}}{2n} g_{2n}(x)$$

The normal velocities produced on contour C by the $n = 1$ and $n = 2$ components of φ_m are shown qualitatively by the arrows in sketch (c).

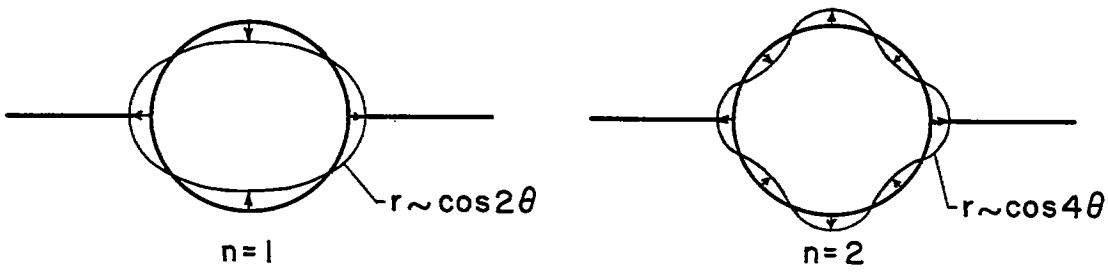

Sketch (c)

The interference potential φ_i is obtained from φ_W by using the boundary condition that there be no net flow through the body surface. Mathematically this is written

$$\left(\frac{\partial\varphi_i}{\partial r}\right)_{r=a} = -\left(\frac{\partial\varphi_W}{\partial r}\right)_{r=a} \tag{8}$$

Expansion of equation (3) in a Fourier cosine series that converges for $r < b$ and $0 < \theta < \pi$ gives

$$\varphi_W = d_o(l) + \sum_{n=1}^{\infty} d_{2n}(l)\cos 2n\theta \tag{9}$$

where

$$d_o(l) = \frac{2bV}{\pi}\left(\log b + \frac{r}{b} - 1\right) Z'(l)$$

$$d_{2n}(l) = \frac{bV}{\pi}\left[\frac{1}{n(2n-1)}\frac{r^{2n}}{b^{2n}} - \frac{4}{4n^2-1}\frac{r}{b}\right] Z'(l)$$

Then φ_i is obtained from equations (4), (8), and (9) in the form

$$\varphi_i = f_o(l)\log r + \sum_{n=1}^{\infty} \frac{f_{2n}(l)}{r^{2n}} \cos 2n\theta \tag{10}$$

where

$$f_o(l) = -\frac{2aV}{\pi} Z'(l)$$

$$f_{2n}(l) = \frac{a^{2n+1}V}{(2n-1)\pi}\left(\frac{a^{2n-1}}{b^{2n-1}} - \frac{2}{2n+1}\right) Z'(l)$$

Theoretical Drag Reduction Due to Body Shape Modification

As previously discussed, only the third term in equation (1) enters in the drag increment produced by adding a body shape modification without altering the cross-sectional area distribution. If subscript C refers to the potential of the combination before adding body modifications and subscript A refers to the potential after adding the modifications

$$\frac{\Delta D}{q} \equiv -\frac{1}{V^2}\oint_C \varphi_A \frac{\partial\varphi_A}{\partial n}\,ds + \frac{1}{V^2}\oint_C \varphi_C \frac{\partial\varphi_C}{\partial n}\,ds \tag{11}$$

where

$$\varphi_A = \varphi_C + \varphi_m$$

(The contour C is shown in sketch (a).) With the conditions that $\frac{\partial\varphi_m}{\partial n} = \frac{\partial\varphi_B}{\partial n} = \frac{\partial\varphi_i}{\partial n} = 0$ and $\frac{\partial\varphi_W}{\partial n} = VZ'(l)$ on the wing and $\frac{\partial\varphi_W}{\partial n} = -\frac{\partial\varphi_i}{\partial n}$ on the body

$$\frac{\Delta D}{q} = -\frac{2}{V^2}\int_0^{\pi}\left[\varphi_m \frac{\partial\varphi_B}{\partial r} + (\varphi_W+\varphi_B+\varphi_i+\varphi_m)\frac{\partial\varphi_m}{\partial r}\right] a\,d\theta - \frac{4Z'(l)}{V}\int_a^b \varphi_m dr \tag{12}$$

Insertion of equations (5), (7), (9), and (10) and the orthogonality property of the cosine function into equation (12) gives

$$\frac{\Delta D}{q} = \frac{2a}{V^2}\sum_{n=1}^{\infty}\int_0^{\pi}\left[d_{2n}(l) + \frac{1}{r^{2n}} f_{2n}(l) + \frac{1}{r^{2n}} a_{2n}(l)\right]\left[\frac{na_{2n}(l)}{r^{2n+1}}\right]\cos^2 2n\theta\,d\theta - \frac{4Z'(l)}{V}\sum_{n=1}^{\infty}\int_a^b \frac{a_{2n}(l)}{r^{2n}}\,dr$$

Integration gives

$$\frac{\Delta D}{q} = a^2\sum_{n=1}^{\infty}\left[\frac{4}{n(2n-1)}\left(1 - \frac{a^{2n-1}}{b^{2n-1}}\right) g_{2n}(l)Z'(l) + \frac{\pi}{2n} g_{2n}^2(l)\right] \tag{13}$$

We obtain the optimum values of $g_{2n}(l)$ by considering each term of the series separately. The values of $g_{2n}(l)$ that give the maximum $\Delta D/q$ are

$$g_{2n}(l) = -\frac{4}{(2n-1)\pi}\left(1 - \frac{a^{2n-1}}{b^{2n-1}}\right) Z'(l) \tag{14}$$

The maximum drag reduction is then

$$\frac{\Delta D}{qa^2} = -\frac{2}{\pi}\left[Z'(l)\right]^2 \sum_{n=1}^{\infty} \frac{1}{n}\left[\frac{2}{2n-1}\left(1 - \frac{a^{2n-1}}{b^{2n-1}}\right)\right]^2 \tag{15}$$

As expected, the optimum value of $g_{2n}(l)$ and the drag reduction are zero when the wing trailing edge is cusped.

Although the total drag increment depends only on conditions at the model base, the drag increment does not originate there. Actually the drag increment is distributed over the entire winged portion of the model as illustrated by the following example: Since the distribution of the amplitude function, $g_{2n}(x)$, is arbitrary for x less than l, choose

$$g_2(x_1) = \lambda_1\left(\frac{x_1}{c}\right) + \lambda_2\left(\frac{x_1}{c}\right)^2$$

where $x_1 = x-(l-c)$ and λ_1 and λ_2 are chosen so that $g_2(l)$ satisfies the condition of maximum drag reduction (eq. (14)). The distribution of drag increment due to the addition of this $g_2(x)$ shape modification is shown in sketch (d) for a biconvex-section rectangular wing.

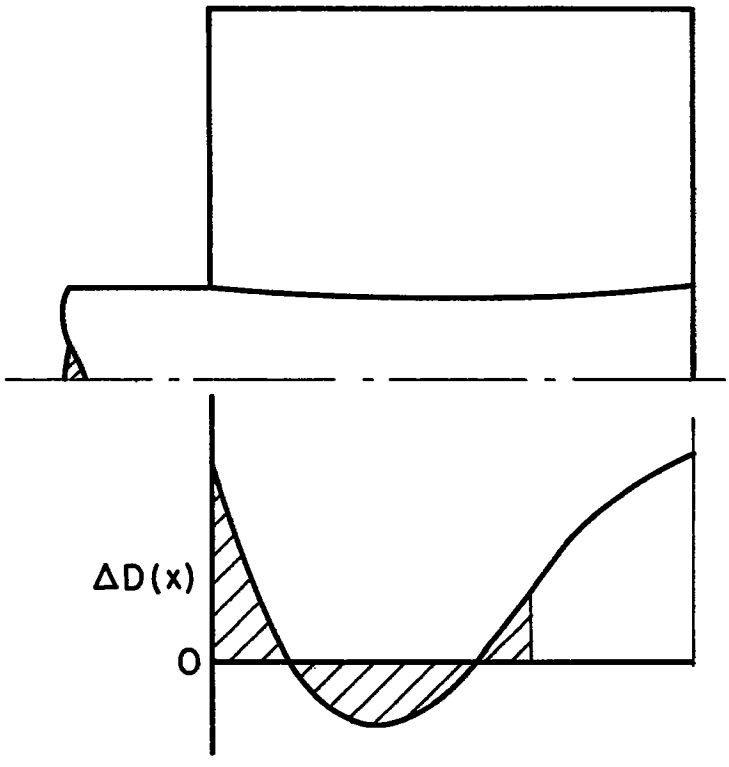

Sketch (d)

Influence of Boundary-Layer Shock-Wave Interaction on Drag Reduction

The foregoing calculations are based on inviscid-flow theory which ignores the interaction between the trailing-edge shock wave of the wing (and body) and the boundary layer approaching the base. The questions arise as to how this interaction affects the over-all drag and how it affects the drag reductions due to the type of modifications of the body shapes calculated herein. In the theory the streamlines at the trailing edge are assumed to be as shown at the top of sketch (e). The streamlines are parallel to the sides of the trailing-edge wedge and undergo a pressure rise in traversing the trailing-edge shock wave. Because the pressure rise occurs behind the wing, it does not act to decrease the drag. If the trailing edge were cusped, as shown at the middle of sketch (e), the pressure rise would occur through a gradual compression in front of the wing trailing edge and the drag due to the trailing-edge angle would be eliminated.

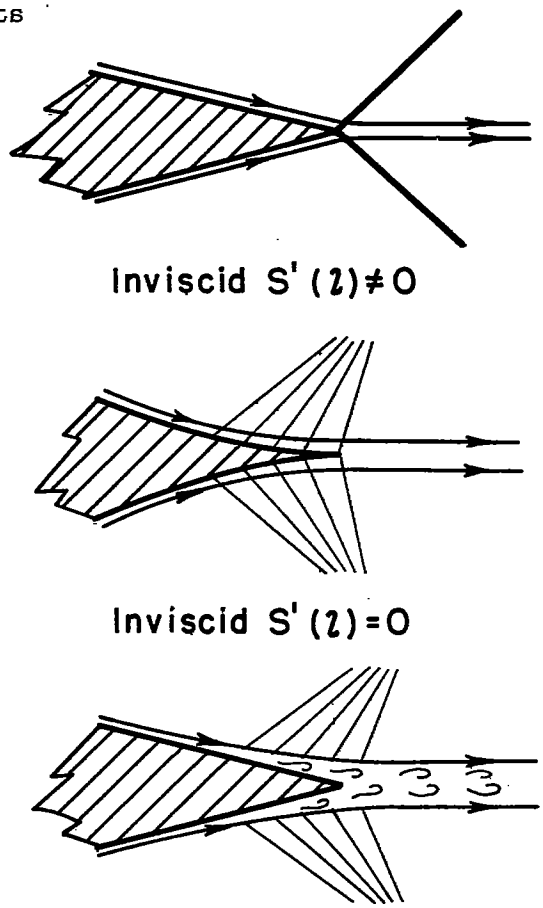

Sketch (e)

The influence of viscosity on the drag is somewhat similar to that of cusping the trailing edge. The boundary layer allows the pressure rise through the trailing shock waves to be transmitted upstream. This thickens the boundary layer; compression begins over the wing surface; and shocks move up in front of the trailing edge. The accompanying pressure increase over the rear of the wing acts to decrease the pressure drag below its value on the basis of inviscid fluid theory. Such an effect has been shown by pressure distributions (e.g., ref. 5) for two-dimensional airfoils in supersonic flow. The amount the pressure drag is reduced below the inviscid value depends on the boundary-layer thickness approaching the trailing edge, the shock-wave strength (Mach number), and whether the boundary layer is laminar or turbulent. A phenomenon similar to that shown at the bottom of sketch (e) is also important in the wave-making resistance of boat hulls. As pointed out by Havelock (ref. 6), the wave-making resistance is reduced by virtue of a thickening of the "friction belt" near the stern.

Since boundary-layer shock-wave interaction influences the flow at the trailing edge and since the drag increment expression (eq. (15)) depends only on conditions at the trailing edge, it is pertinent to ask if the drag reductions computed herein on the basis of inviscid fluid theory are realistic. Although $\Delta D/q$ is a function only of trailing-edge conditions, the drag reduction is distributed over the entire winged portion of the configuration as shown by the example in sketch (d). For this example the total drag increment up to $x_1/c = 0.65$ (shaded region) is zero, so that the net drag reduction given by the present inviscid fluid theory is distributed in the region $0.65 < (x_1/c) \leq 1$. Since boundary-layer shock-wave interaction effects will influence this drag distribution only near the trailing edge, it appears that most of the drag reduction predicted by the inviscid theory can be realized; the actual amount can only be determined by experiment.

CONCLUDING REMARKS

Equation (15) gives the maximum drag reduction obtained (in inviscid theory) by modifying the streamwise slopes of the body without changing the cross-sectional area. This expression is independent of the wing plan form since it depends only upon conditions at the base. However, the drag reduction is distributed over the winged portion of the wing-body combination to the extent that the streamwise slopes of the body are modified. This drag distribution does depend upon wing plan form.

To give an idea of the order of magnitude of the drag reduction given by equation (15), a comparison is made with the drag reduction given by the area-rule modification. For a delta-wing cylindrical-body combination (sketch (a)) with $b/a = 3$, the additional drag reduction (neglecting any change in base drag) given by the $g_2(l)$ shape modification is 12 percent of the drag given by the first term in equation (1) (the area-rule term). This percentage varies somewhat with different configurations, but it should remain the same order of magnitude. The effect of the other $g_{2n}(l)$ modifications is negligible compared to the $g_2(l)$ modification.

Ames Aeronautical Laboratory
National Advisory Committee for Aeronautics
Moffett Field, Calif., Mar. 21, 1958

REFERENCES

1. Jones, Robert T.: Theory of Wing-Body Drag at Supersonic Speeds. NACA Rep. 1284, 1956. (Supersedes NACA RM A53H18a)

2. Ward, G. N.: Supersonic Flow Past Slender Pointed Bodies. Quart. Jour. Mech. and Appl. Math., vol. 2, pt. 1, 1949, pp. 75-97.

3. Berndt, Sune B.: On the Drag of Slender Bodies at Sonic Speed. Flygtekniska Forsoksanstalten Rep. 70, May 1955.

4. Lighthill, M. J.: The Wave Drag at Zero Lift of Slender Delta Wings and Similar Configurations. Jour. Fluid Mech., vol. I, pt. 3, Sept. 1956, pp. 337-348.

5. Ferri, Antonio: Elements of Aerodynamics of Supersonic Flows. The Macmillan Co., 1949.

6. Havelock, T. H.: Calculations Illustrating the Effect of Boundary Layer on Wave Resistance. Trans. Inst. Naval Architects, vol. 90, no. 3, July 1948, pp. 259-271.

NACA - Langley Field, Va.