10634
NACA TN 4292

TECH LIBRARY KAFB, NM
0067271

NATIONAL ADVISORY COMMITTEE FOR AERONAUTICS

TECHNICAL NOTE 4292

LOCAL INSTABILITY OF THE ELEMENTS OF A TRUSS-CORE SANDWICH PLATE

By Melvin S. Anderson

Langley Aeronautical Laboratory
Langley Field, Va.

Washington
July 1958

AFMDC
TECHNICAL LIBRARY

TECH LIBRARY KAFB, NM

0067271

G

NATIONAL ADVISORY COMMITTEE FOR AERONAUTICS

TECHNICAL NOTE 4292

LOCAL INSTABILITY OF THE ELEMENTS OF A TRUSS-CORE SANDWICH PLATE

By Melvin S. Anderson

SUMMARY

Charts are presented which give the compressive buckling coefficient for local instability of a single-truss-core and a double-truss-core sandwich plate. These charts cover a wide range of sandwich proportions and may be used for sandwiches with unequal faces. They apply to in-plane compressive loads acting parallel or perpendicular to the core direction or for various combinations of these loads.

INTRODUCTION

Sandwich-plate construction has been of increasing importance because of the need for light-weight structures in which dense temperature-resistant materials are used. Many sandwich-type configurations employing different production techniques have been suggested. The two configurations shown in figure 1 are designated truss-core sandwiches and have been fabricated by resistance welding processes. Preliminary calculations (ref. 1) indicate that such configurations are desirable from a weight-strength basis. In structural analyses of these configurations, the local buckling stress of the cross section should be known. In the present paper, the local buckling stress has been determined for the type of sandwich plates shown in figure 1. In-plane compressive loads both parallel and perpendicular to the axis of the corrugations making up the core of the sandwich are included in the analyses.

SYMBOLS

b	plate-element width
C_2, F_2, μ_2	rotational stiffness of a plate element with edges subject to equal moments of opposite sign (see refs. 2 and 3)

C_3, F_3, μ_3	rotational stiffness of a plate element with edges subject to equal moments of same sign (see refs. 2 and 3)
E	modulus of elasticity
k	local buckling coefficient
k'	buckling coefficient used in stiffness charts and tables (refs. 3 and 4) when in-plane stresses are acting in two perpendicular directions (see eq. (20))
S	rotational stiffness of a plate element with far edge clamped (see ref. 4)
S^{II}	rotational stiffness of a plate element with far edge simply supported (see ref. 4)
S^{IV}	rotational stiffness of a plate element with edges subject to equal moments of opposite sign (see ref. 4)
T_α, T_β, T_ψ	sum of moments acting at a joint (clockwise moments are positive)
t	plate-element thickness
α, β, ψ	angles of rotation at joints in truss-core sandwich (clockwise rotations are positive)
η	plasticity reduction factor
θ	angle between core element and face-sheet element
λ	buckle length (half wave length measured in x-direction)
λ'	buckle length to be used in stiffness charts and tables (refs. 3 and 4) when in-plane stresses are acting in two perpendicular directions (see eq. (19))
μ	Poisson's ratio
σ_{cr}	buckling stress (see eq. (22))

Subscripts:

c	refers to core
f	refers to face sheet

x refers to longitudinal direction, the direction of axis of core

y refers to transverse direction

ANALYSIS

For the purpose of analysis, the cross sections of the configurations shown in figure 1 have been idealized as shown in figure 2 by assuming the core to consist of straight-line elements. Buckling is assumed to occur with rotation of the joints but with no deflection of the joints. The sandwich plate is assumed to be of sufficient length and width that end effects are negligible. Compression loads may be applied in either the longitudinal or transverse direction of the sandwich plate.

The basic unit of the truss-core sandwich is the triangle in which the plate elements are not amenable to the formation of simple buckles that usually occur in plate structures. For this reason, the elements are restrained by edge moments which tend to raise the buckling stress. For example, it was found that three identical plates forming a triangular tube have a buckling coefficient of 4.7 as compared with 4 for a square tube.

Application of the theory of reference 2 is well suited for the determination of the local buckling stress of the truss-core sandwich. The theory is based on the fact that the buckled shape of any plate element in a configuration can be identified with an edge rotation and an edge moment. By satisfying equilibrium at each joint, which means that the sum of the moments of all members at a joint is zero, the stability criterion is obtained. The relationship between edge moments and rotations can be obtained from stiffness factors defined in reference 2. The moments acting on a plate element with edge rotations of α and β are given by expression (16) of reference 2 as

$$\left(\frac{\mu_2 + \mu_3}{2}\right)\alpha + \left(\frac{\mu_3 - \mu_2}{2}\right)\beta \tag{1}$$

at the edge with rotation α and

$$\left(\frac{\mu_3 - \mu_2}{2}\right)\alpha + \left(\frac{\mu_2 + \mu_3}{2}\right)\beta \tag{2}$$

at the edge with rotation β. In expressions (1) and (2), μ_2 is the

rotational stiffness of a plate element with a symmetrical deflection and μ_3 is the rotational stiffness of a member with an antisymmetrical deflection.

Stability Criteria for Single-Truss-Core Sandwich

Some of the possible buckling modes for the single-truss-core sandwich with equal face sheets are shown in figure 3. The stability criterion can be written for mode A by noting that one end of each of the core elements has zero rotation. It is convenient to denote the stiffnesses μ_2 or μ_3 as F_2 or F_3 for the face sheets and as C_2 or C_3 for the core. Then, for mode A,

$$2F_2 + C_2 + C_3 = 0 \tag{3}$$

For mode B,

$$2F_2 + C_2 + C_3 = 0 \tag{4}$$

and for mode C,

$$F_3 + C_2 = 0 \tag{5}$$

Mode D involves a deflection pattern that is more complicated than the previous ones, and the solution may be obtained as follows: The moment at any joint with a rotation α may be obtained from expression (1) as

$$T_\alpha = \left(\frac{C_2 + C_3}{2}\right)\alpha - \left(\frac{C_3 - C_2}{2}\right)\beta + C_3\alpha + \left(\frac{F_2 + F_3}{2}\right)\alpha - \left(\frac{F_3 - F_2}{2}\right)\beta + F_3\alpha = 0 \tag{6}$$

Similarly at any joint with a rotation $-\beta$ the moment is:

$$T_\beta = \left(C_3 - C_2\right)\alpha - \left(C_2 + C_3\right)\beta + \left(F_3 - F_2\right)\alpha - \left(F_2 + F_3\right)\beta = 0 \tag{7}$$

Solving equation (6) for α and substituting into equation (7) yields the following stability criterion for mode D:

$$3F_2 + F_3 + 3C_2 + C_3 = 0 \tag{8}$$

Equations (3) and (4) are identical; therefore, buckling will occur in modes A and B at the same stress level. The stability criterion that gives the lowest value of the buckling stress is the one that applies for any given case. Calculations show that mode A applies in most cases, but at low values of t_c/t_f mode C governs. However, all modes shown in figure 3 have essentially the same buckling coefficient at low values of t_c/t_f.

If a sandwich with unequal faces buckles as in mode A, equation (3) will again apply because the thicker face will remain unbuckled and, hence, will not affect the solution. At lower values of t_c/t_f, an unequal-face sandwich may buckle similar to mode C. However, as was mentioned previously, all modes shown in figure 3 have essentially the same buckling coefficient for low values of t_c/t_f. Therefore, the buckling coefficients for equal-face sandwiches may be used for sandwiches with unequal faces if the ratio t_c/t_f is obtained from the thickness of the core and the thickness of the thinner face of the unequal-face sandwich.

Stability Criteria for Double-Truss-Core Sandwich

A general mode shape for the double-truss-core sandwich with equal face sheets is shown in figure 4(a). The angles α, β, and ψ may take on such values that any joint may be clamped or an S-curve or a half wave may appear in any element.

The moments acting at joints with rotations α, $-\beta$, and ψ, respectively, are:

$$T_\alpha = \left(F_2 + F_3\right)\alpha - \left(F_3 - F_2\right)\beta + \left(C_2 + C_3\right)\alpha + \left(C_3 - C_2\right)\psi = 0 \tag{9}$$

$$T_\beta = \left(F_3 - F_2\right)\alpha - \left(F_2 + F_3\right)\beta - \left(C_2 + C_3\right)\beta + \left(C_3 - C_2\right)\psi = 0 \tag{10}$$

$$T_\psi = \left(C_3 - C_2\right)\alpha - \left(C_3 - C_2\right)\beta + 2\left(C_2 + C_3\right)\psi = 0 \tag{11}$$

Equating to zero the determinant of the coefficients of α, β, and ψ will yield the stability criterion which is either

$$2F_2 + C_2 + C_3 = 0 \tag{12a}$$

or

$$F_3 + \frac{2C_2C_3}{C_2 + C_3} = 0 \tag{12b}$$

The values of β and of ψ may be computed in terms of α with the use of equation (12a) or (12b) and equations (10) and (11). The actual mode shapes can then be constructed and are given in figure 4(b) for equation (12a) and in figure 4(c) for equation (12b). For this configuration, the behavior of each triangle is independent of the rest; therefore, this solution also applies to a single triangle with two identical sides or to a configuration represented by the upper half of the double-truss-core sandwich. Note that equation (12a) is identical to equation (3) and that mode A in figure 3 is equivalent to mode A in figure 4.

If the double-truss-core sandwich has unequal faces, the part with the thinner face may buckle as in mode A (fig. 4(b)). This mode would be independent of the thicker face; hence, equation (12a) is still applicable. For unequal-face sandwiches, that buckle similar to mode B, the use of equation (12b) would lead to some error. However, if it is assumed that both faces of the sandwich have the same thickness as the thinner face, equation (12b) will yield results which are only slightly conservative.

Alternate Form of Stability Criteria

In order to calculate buckling stresses with the previously derived stability criteria, values of the various stiffness factors must be known. Charts giving values of μ_2 and μ_3 are presented in reference 3. It is sometimes convenient in calculations to have stiffnesses given in tabular form as is done in reference 4. However, μ_3 is not tabulated in reference 4, but the relationship of μ_2 and μ_3 to the stiffnesses given in reference 4 may be obtained with the aid of expressions (1) and (2) and the definitions of the various stiffnesses.

In reference 4, the stiffness of a member with a symmetrical deflection is denoted as S^{IV}; hence,

$$S^{IV} = \mu_2 \tag{13}$$

The stiffness of a member with the far edge clamped is S and may be obtained as follows:

$$S = \frac{\mu_2 + \mu_3}{2} \tag{14}$$

The stiffness of a member with the far edge simply supported is S^{II} and is given by the following equation:

$$S^{II} = \frac{2\mu_2\mu_3}{\mu_2 + \mu_3} \tag{15}$$

The stability criterion may be written in the notation of reference 4 when equations (13), (14), and (15) are used. Equation (3) which was found to apply to both the single- and double-truss-core sandwiches may be written as

$$S^{IV}{}_f + S_c = 0 \tag{16}$$

At low values of $\frac{t_c}{t_f}$, equation (4) was found to give the lowest value of buckling coefficient for the single-truss-core sandwich and may be written as

$$2S_f - S^{IV}{}_f + S^{IV}{}_c = 0 \tag{17}$$

For the double-truss-core sandwich, the mode that governs at low values of $\frac{t_c}{t_f}$ is given by equation (12b) which may be written as

$$2S_f - S^{IV}{}_f + S^{II}{}_c = 0 \tag{18}$$

Stiffness of Members Subject to Transverse In-Plane Stresses

The various stability equations derived in the preceding sections apply for direct stresses in both the longitudinal and transverse directions or any combinations of these stresses. The numerical values of the stiffnesses given in references 3 and 4 are for only longitudinal compressive loadings but can be used for the general case by applying the method given in reference 5. A particular value of stiffness may be obtained by using the charts or tables of references 3 and 4, if

λ/b and k are replaced with the following expressions:

$$\frac{\lambda'}{b} = \sqrt{\frac{1}{\left(\frac{b}{\lambda}\right)^2 - \frac{k_y}{2}}} \tag{19}$$

and

$$k' = \left(\frac{\lambda'}{b}\right)^2 \left[\left(\frac{k_y}{2}\right)^2 + \left(\frac{b}{\lambda}\right)^2 \left(k_x - k_y\right)\right] \tag{20}$$

Equations (19) and (20) are equivalent to equations (17) of reference 5.

It is assumed that loads perpendicular to the core direction are resisted only by the face sheets; hence, the presence of these loads affects only the stiffness of the face sheets. Charts that cover the case in which only transverse loads are present are not available, but, with the use of equations (19) and (20) together with the formulas in reference 2 and with the assumption that λ/b approaches infinity, the governing stability criterion (eq. (3)) may be written as

$$\frac{\frac{\pi}{2}\sqrt{k_y}}{\tan \frac{\pi}{2}\sqrt{k_y}} + 4\left(\frac{t_c}{t_f}\right)^3 \cos \theta = 0 \tag{21}$$

RESULTS AND DISCUSSION

The minimum value of the buckling coefficient k_x that satisfies the appropriate stability equation has been calculated and the results are given in figure 5 for the single-truss-core sandwich and in figure 6 for the double-truss-core sandwich. Separate buckling charts are presented for values of k_y equal to 0, 0.5, and 1.0. Values of k_y have been calculated from equation (21) for the case in which $k_x = 0$ and are presented in figure 7. The buckling stress can be computed as:

$$\sigma_{cr} = \frac{k\pi^2 \eta E}{12(1 - \mu^2)}\left(\frac{t_f}{b_f}\right)^2 \tag{22}$$

The buckling coefficients are presented as carpet plots which permit linear horizontal interpolation for both of the independent variables θ and $\frac{t_c}{t_f}$. The method of interpolation is illustrated in figure 8.

The dashed lines in figures 5 and 6 divide the charts into two regions. Above the dashed lines, the face sheet is the unstable element and is restrained by the core. Below the dashed lines, the core is unstable and is restrained by the face sheets. In this lower region the actual buckling coefficients will probably be slightly higher than the theoretical values given in figures 5 and 6, if the actual core elements are curved rather than flat. The discontinuity in the slope of the curves of figure 6 marks the transition from one mode to the other. Equation (12a) applies to the upper portion of the curves and equation (12b) applies to the lower portion.

Examination of figures 5 and 6 indicates that the buckling stress in the longitudinal direction will be appreciably reduced by the presence of transverse loads in the plane of the sandwich if the face sheets are primarily responsible for buckling. If the core elements are unstable, the presence of transverse loads does not alter appreciably the longitudinal buckling stress.

The curves of figures 5 to 7 are also applicable to sandwiches with unequal faces if the ratio t_c/t_f is obtained from the thickness of the core and the thickness of the thinnest face. In figure 6, in the region below the dashed line the charts may be slightly conservative but will be exact, or essentially exact, for other proportions.

Langley Aeronautical Laboratory,
National Advisory Committee for Aeronautics,
Langley Field, Va., April 10, 1958.

REFERENCES

1. Anderson, Melvin S., and Updegraff, Richard G.: Some Research Results on Sandwich Structures. NACA TN 4009, 1957.

2. Cox, H. L.: Computation of Initial Buckling Stress for Sheet-Stiffener Combinations. Jour. R.A.S., vol. 58, no. 525, Sept. 1954, pp. 634-638.

3. Anon.: Data Sheets - Stressed Skin Structures. Vol. II, Fifth Issue, Royal Aero. Soc., Jan. 1957, nos. 02.01.28 to 02.01.37.

4. Kroll, W. D.: Tables of Stiffness and Carry-Over Factor for Flat Rectangular Plates Under Compression. NACA WR L-398, 1943. (Formerly NACA ARR 3K27.)

5. Shuleshko, P.: A Reduction Method for Buckling Problems of Orthotropic Plates. Aero. Quarterly, vol. VIII, pt. 2, May 1957, pp. 145-156.

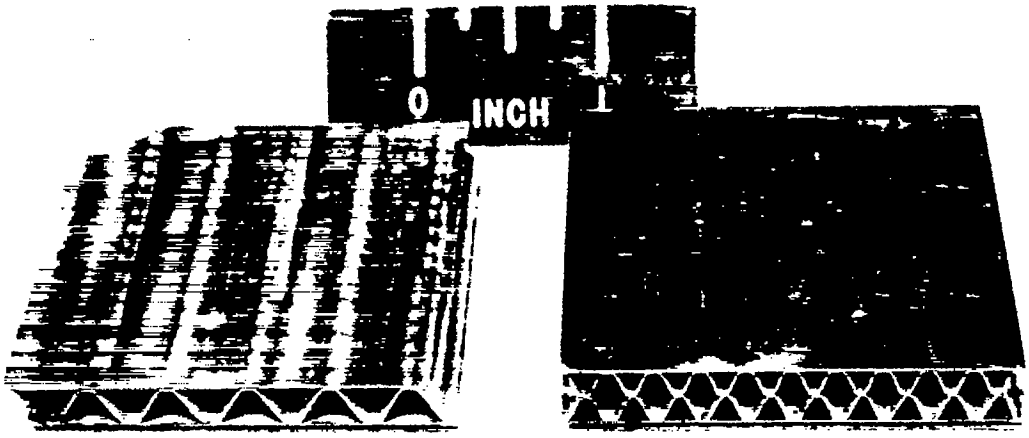

Figure 1.- Two truss-core sandwich configurations. L-58-1038

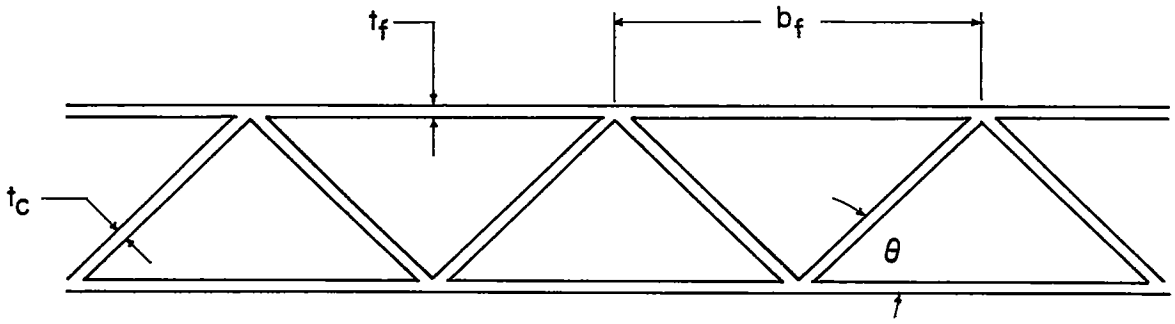

(a) Single truss.

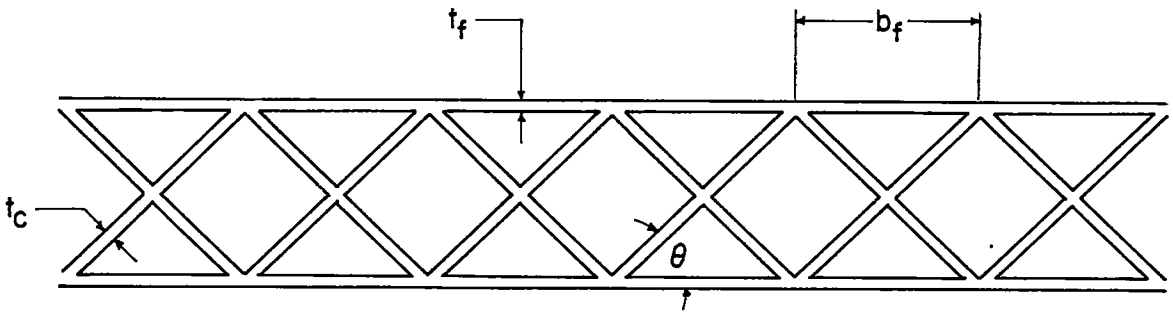

(b) Double truss.

Figure 2.- Idealized cross sections of truss-core sandwich plates.

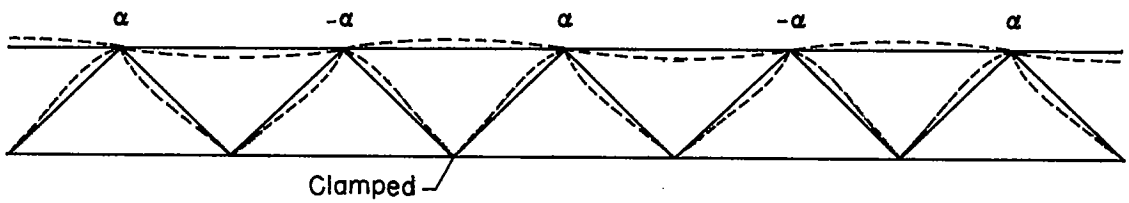

(a) Mode A.

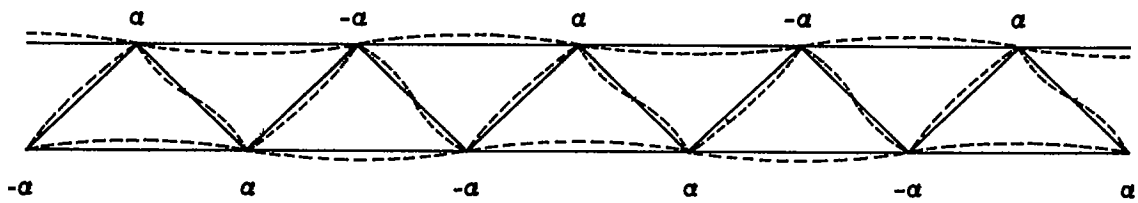

(b) Mode B.

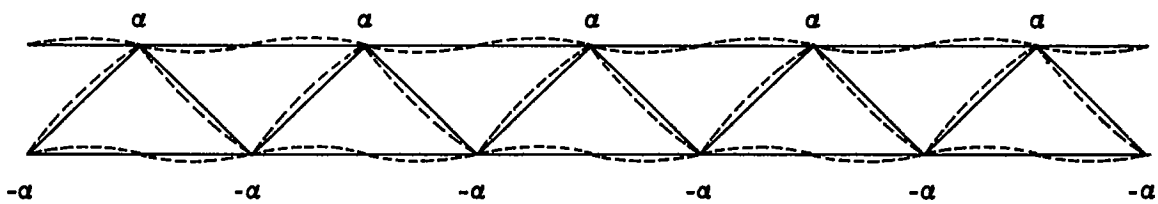

(c) Mode C.

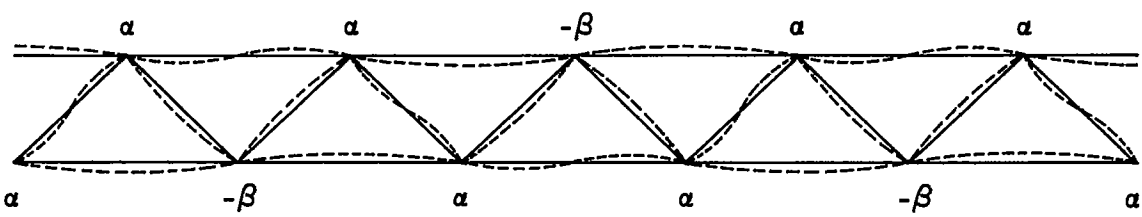

(d) Mode D.

Figure 3.- Buckling modes for single-truss-core sandwich plate.

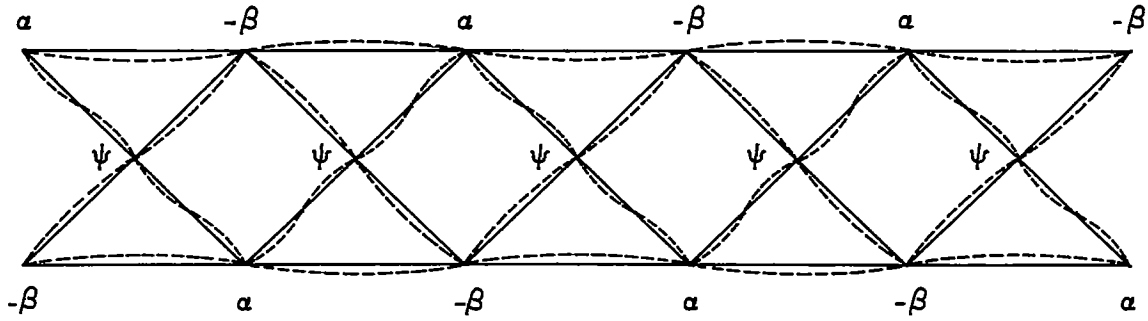

(a) General mode shape.

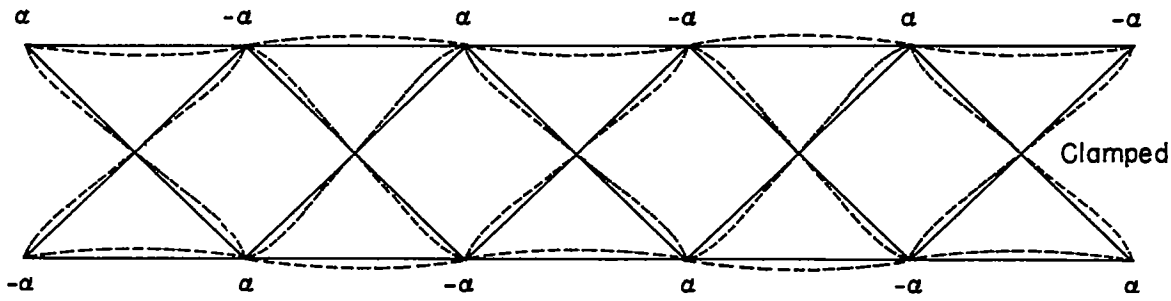

(b) Mode A.

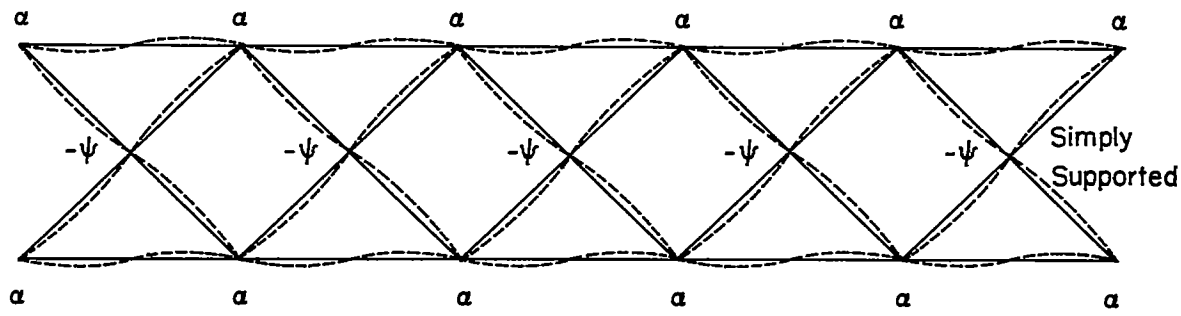

(c) Mode B.

Figure 4.- Buckling modes for double-truss-core sandwich plate.

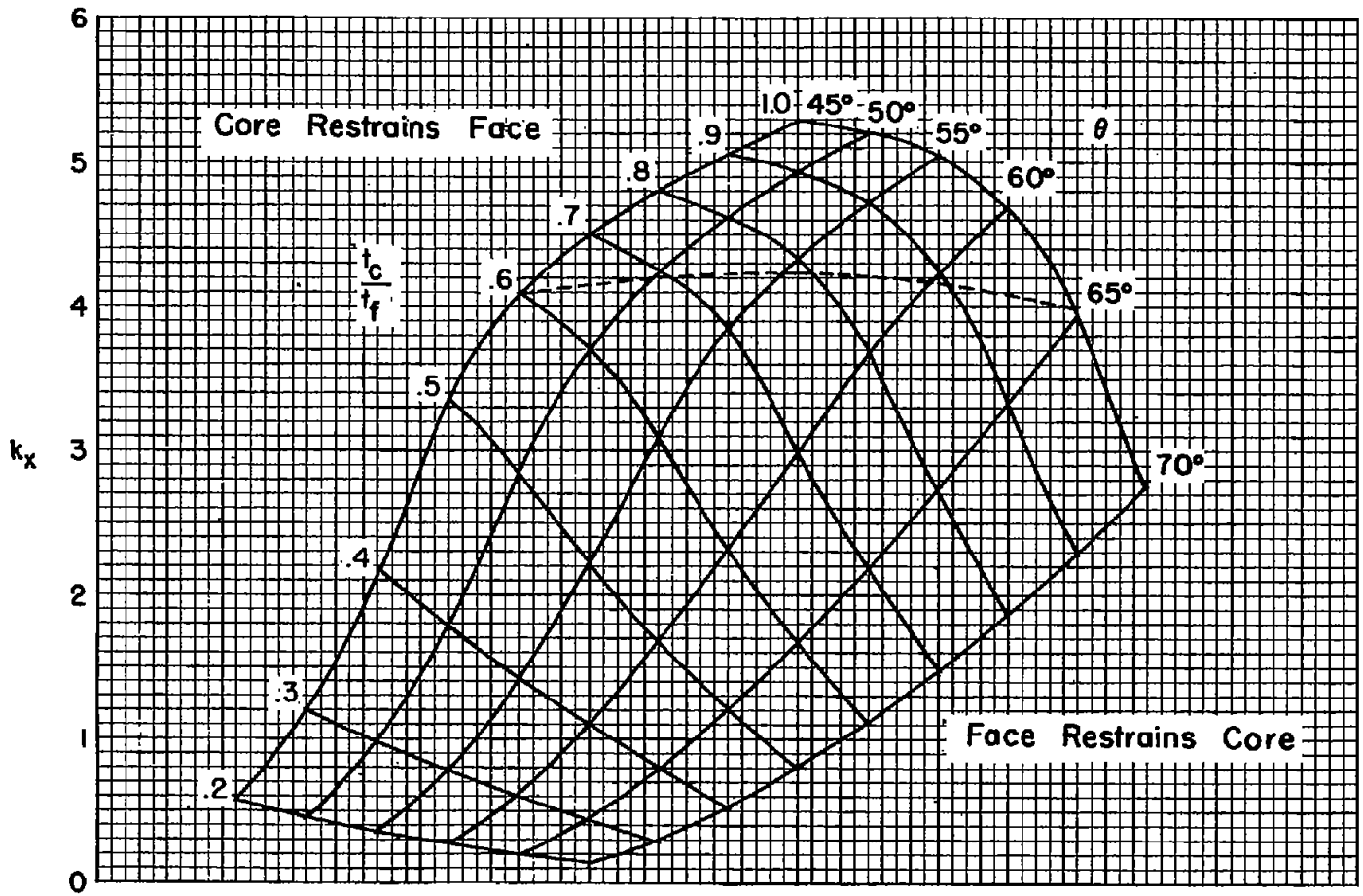

(a) $k_y = 0$.

Figure 5.- Local buckling coefficient for single-truss-core sandwich plate.

$$\sigma_{cr} = \frac{k_x \pi^2 \eta E}{12(1 - \mu^2)} \left(\frac{t_f}{b_f}\right)^2 .$$

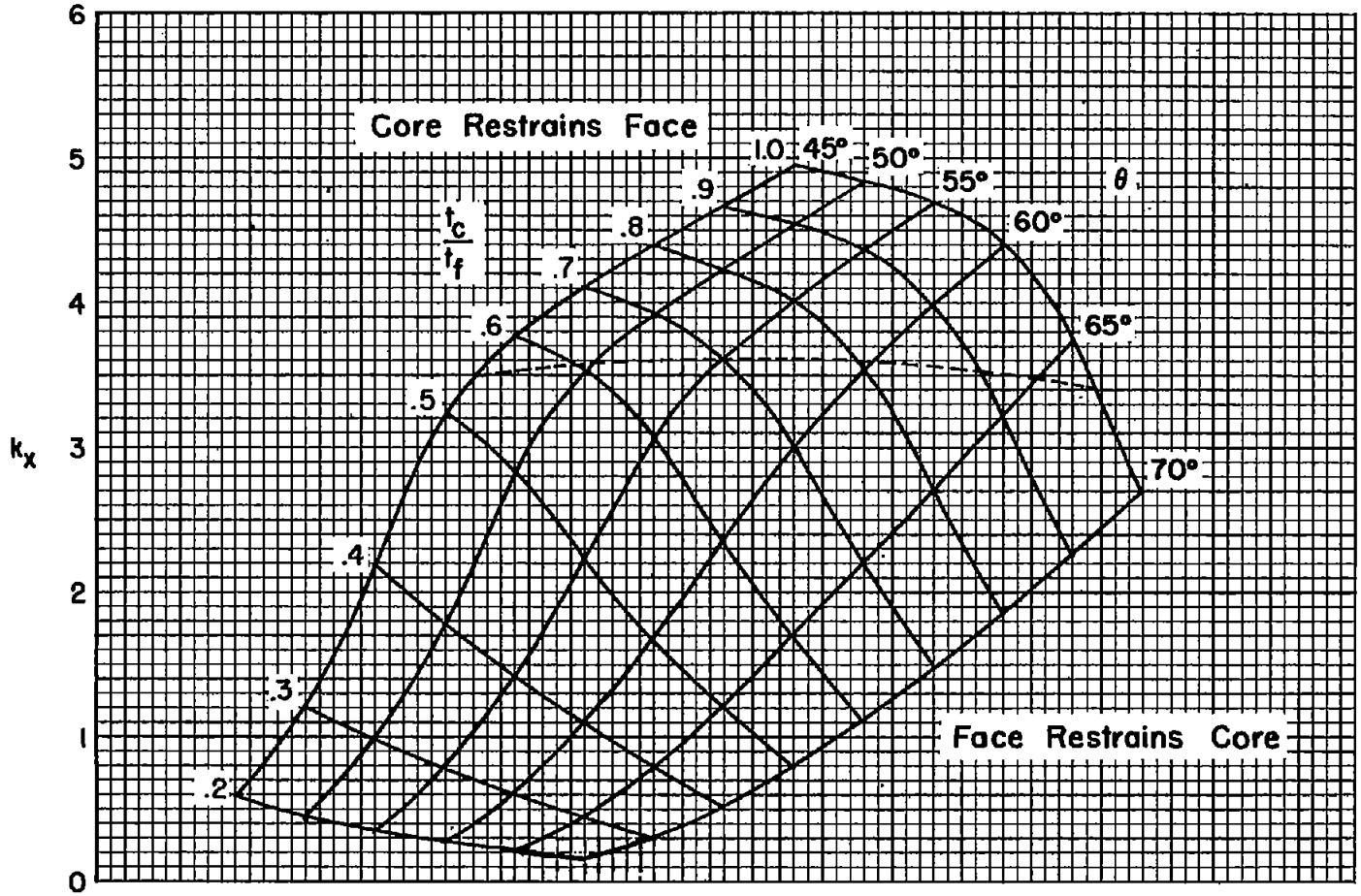

(b) $k_y = 0.5$.

Figure 5.- Continued.

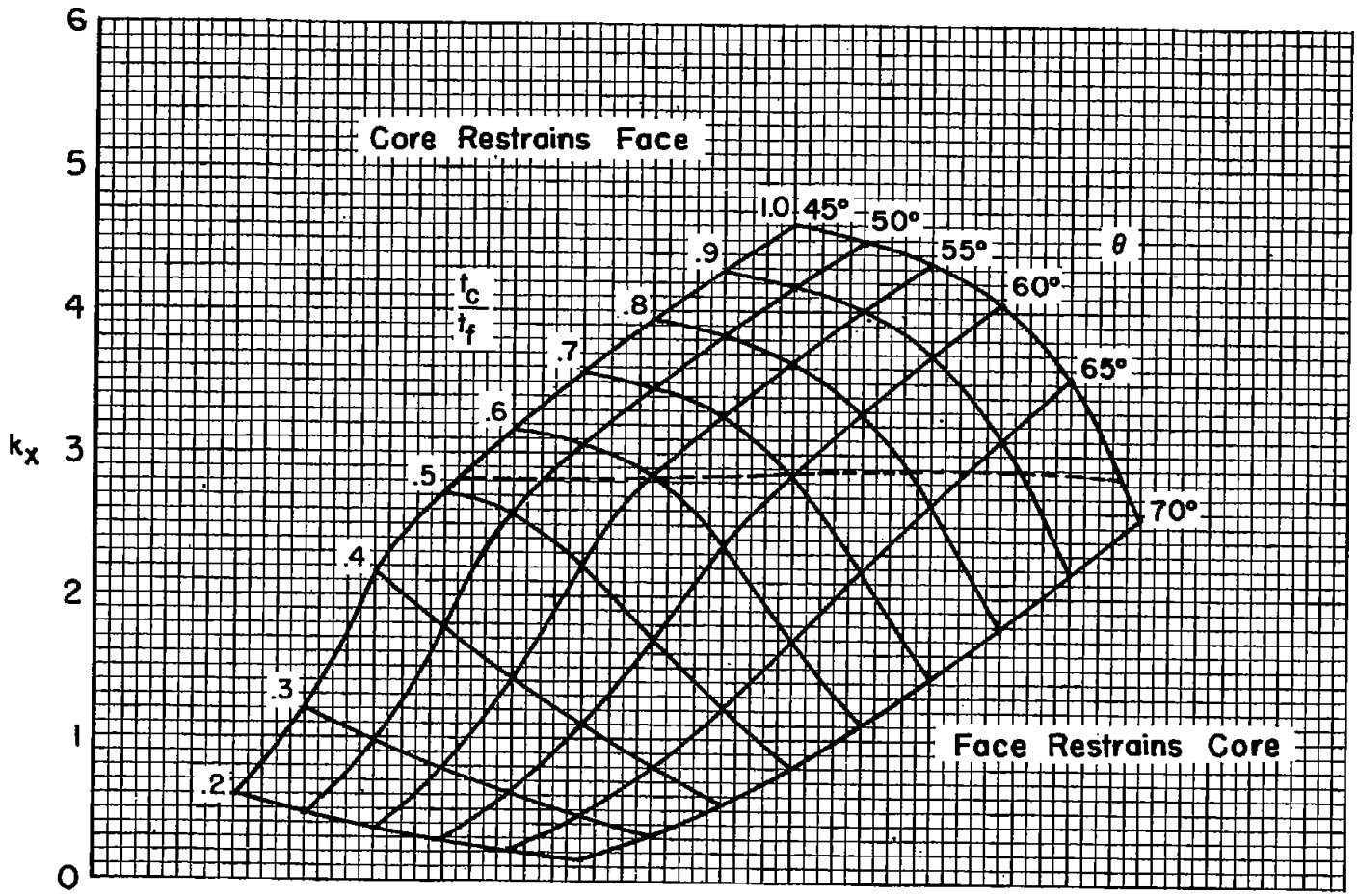

(c) $k_y = 1.0$.

Figure 5.- Concluded.

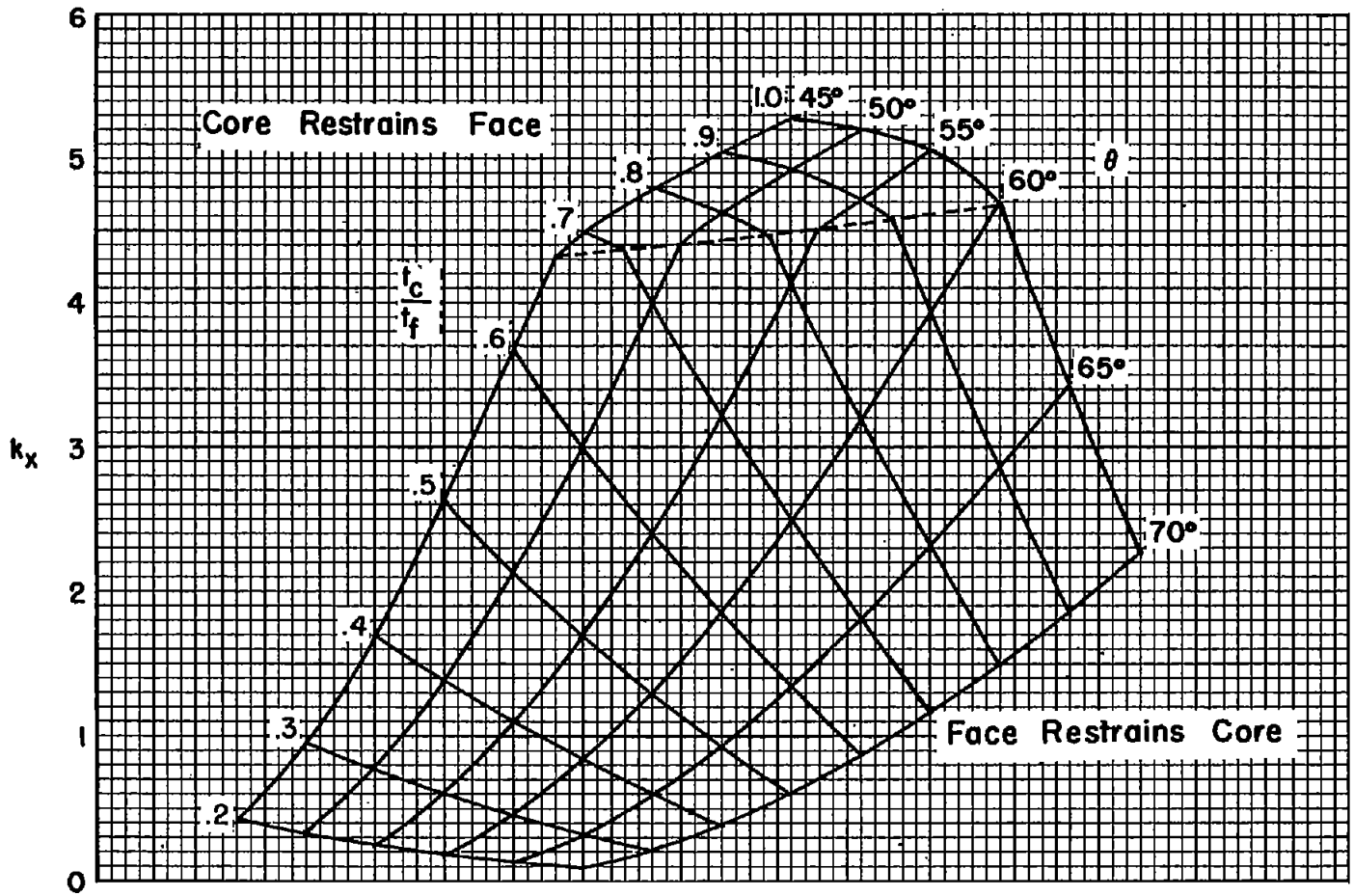

(a) $k_y = 0$.

Figure 6.- Local buckling coefficient for double-truss-core sandwich plate.

$$\sigma_{cr} = \frac{k_x \pi^2 \eta E}{12(1 - \mu^2)}\left(\frac{t_f}{b_f}\right)^2 .$$

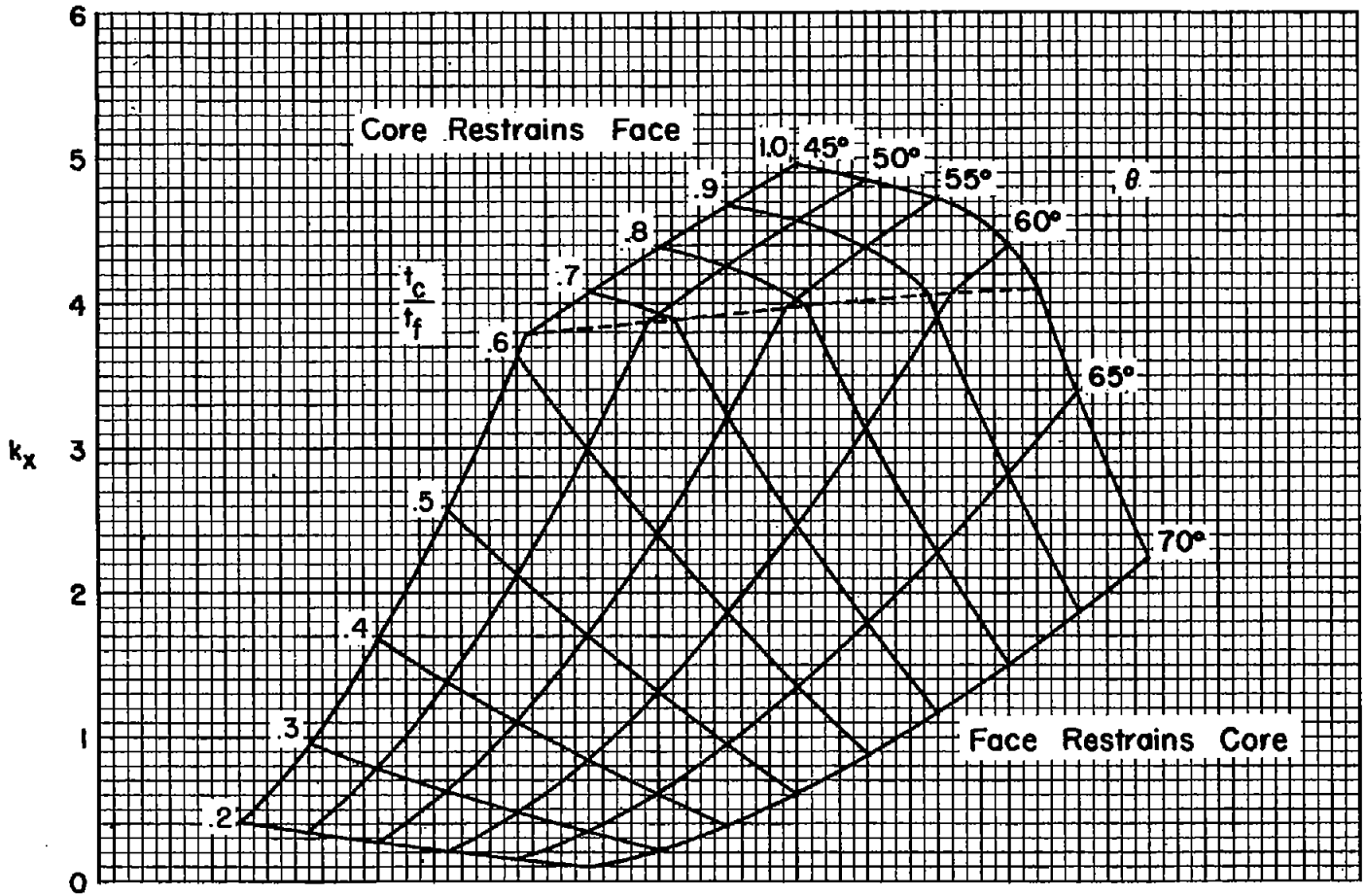

(b) $k_y = 0.5$.

Figure 6.- Continued.

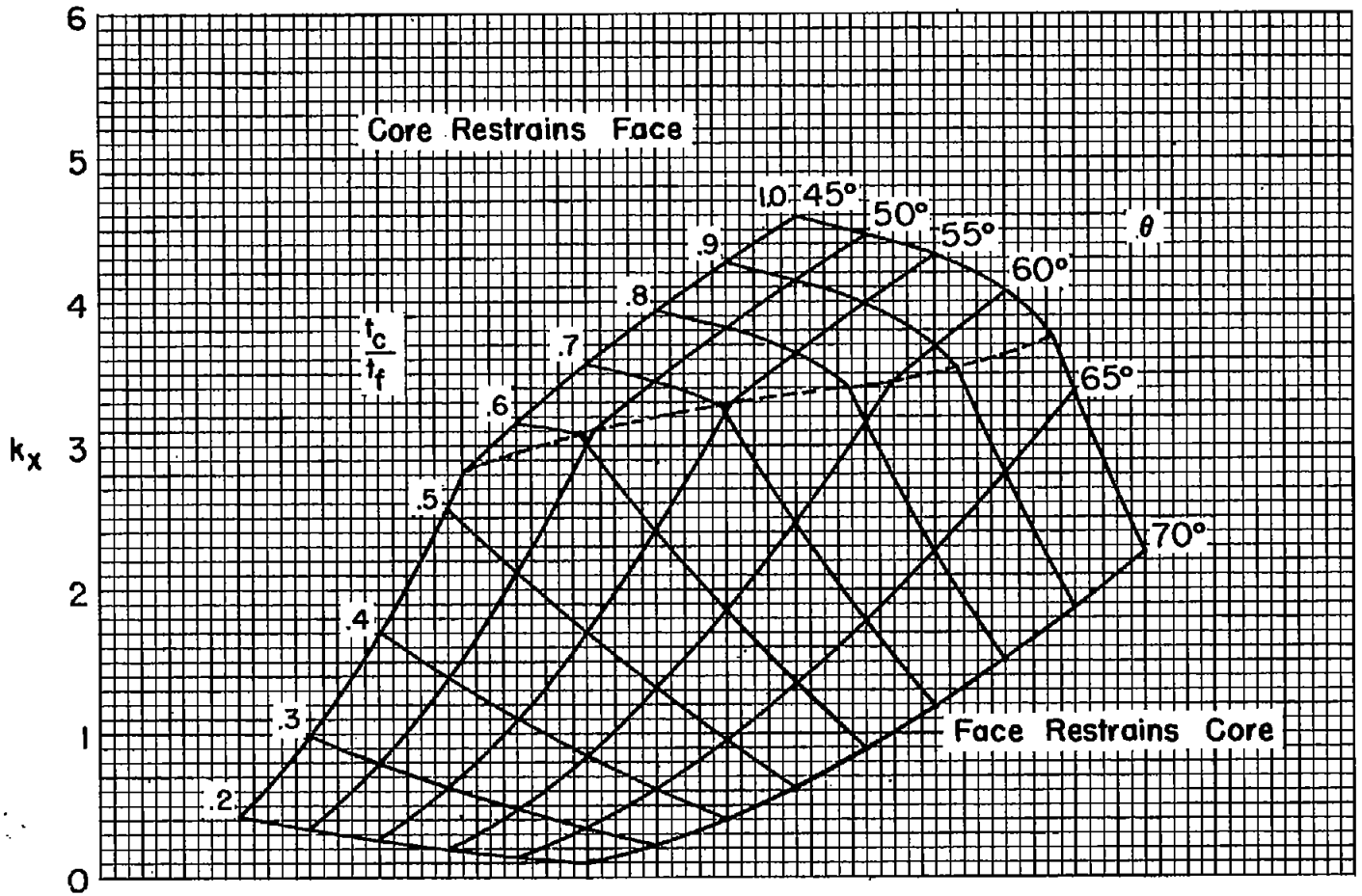

(c) $k_y = 1.0$.

Figure 6.- Concluded.

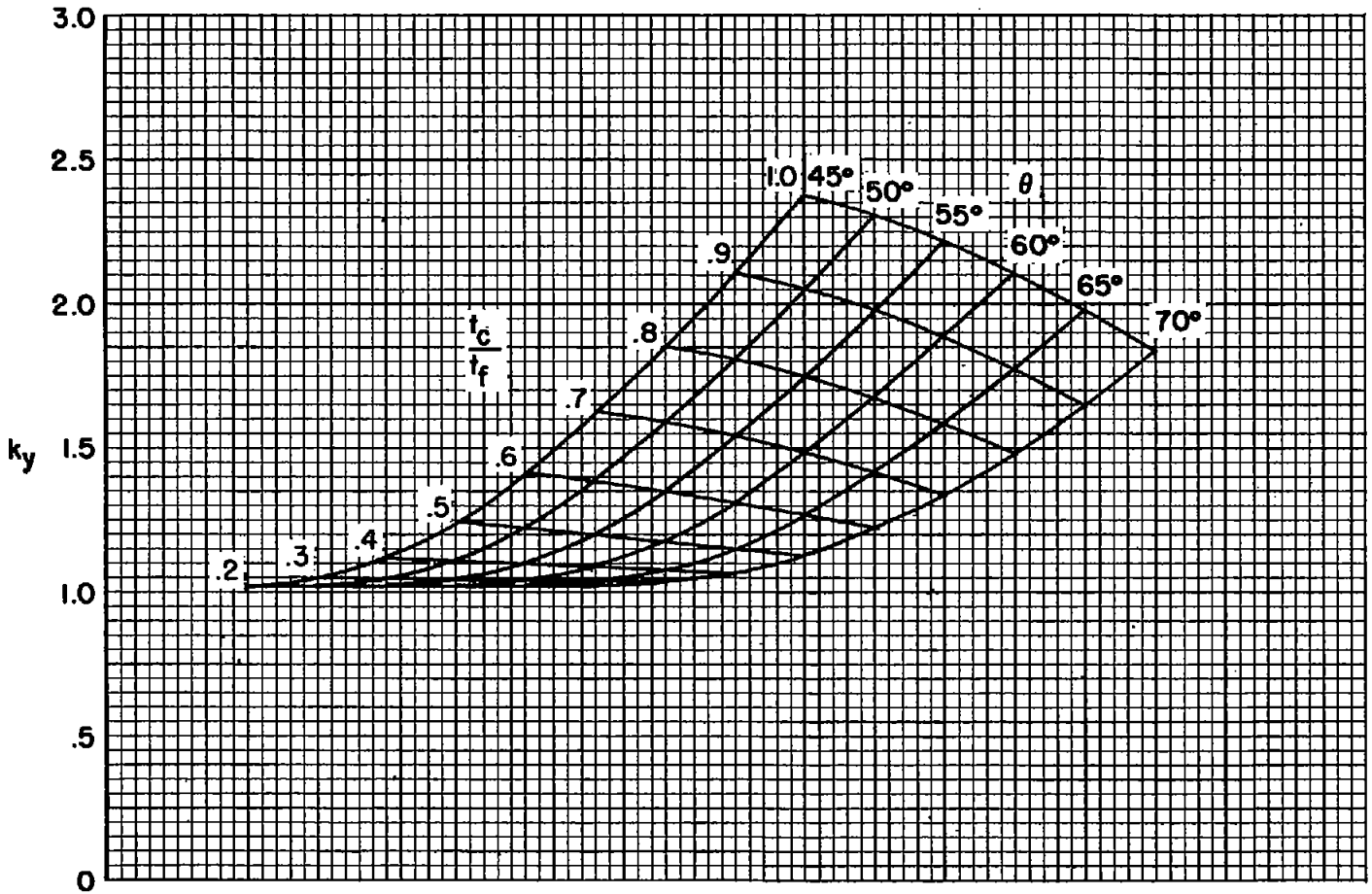

Figure 7.- Local buckling coefficient for both single- and double-truss-core sandwich plates subject to transverse in-plane loading. $\sigma_{cr} = \frac{k_y \pi^2 \eta E}{12(1 - \mu^2)}\left(\frac{t_f}{b_f}\right)^2$; $k_x = 0$.

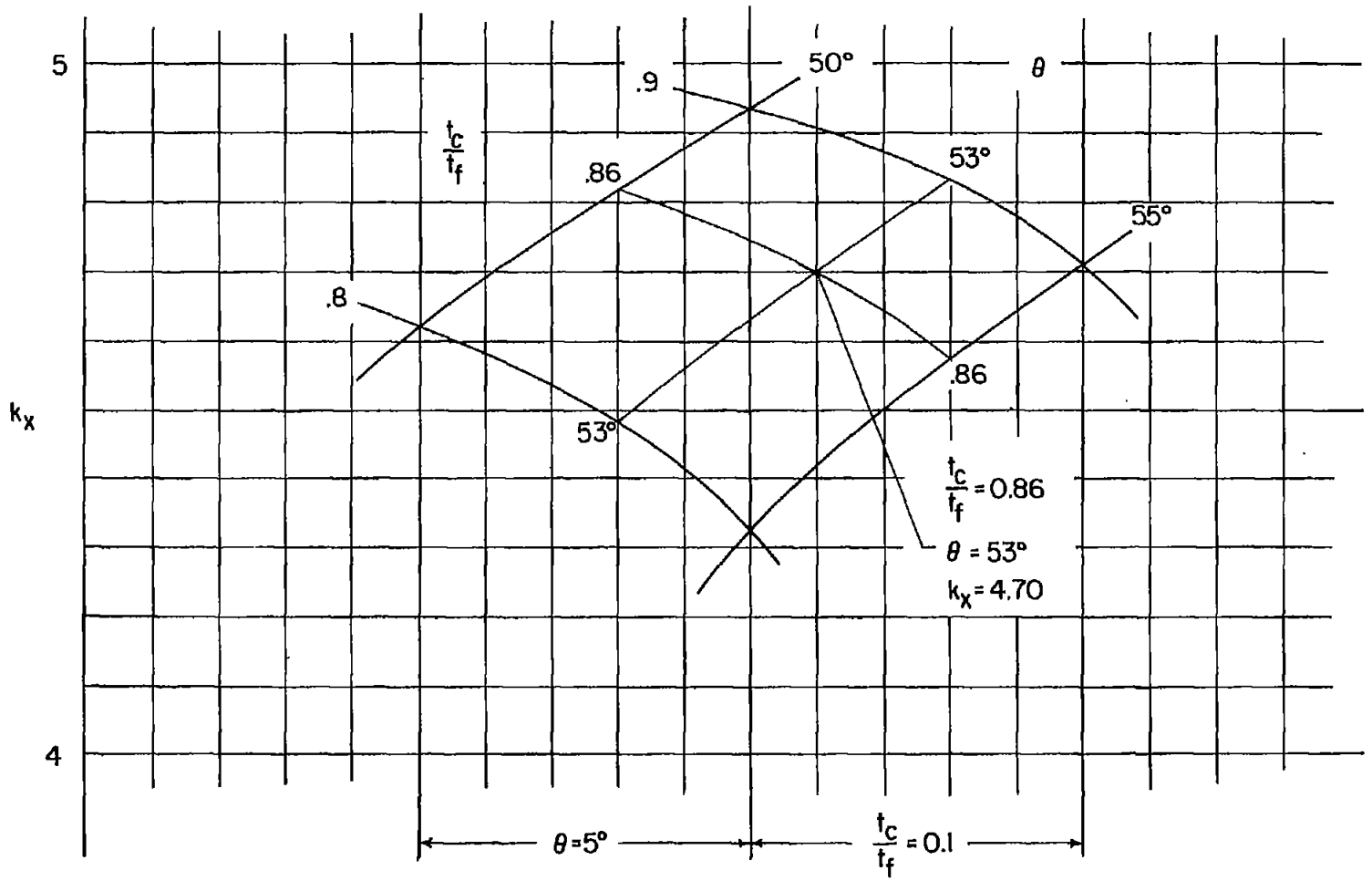

Figure 8.- Method of interpolation on a carpet plot. $\left(\text{If } \frac{t_c}{t_f} \text{ and } \theta \text{ are given, } k_x \text{ may be found as illustrated.}\right)$

NACA - Langley Field, Va.