NACA TN 4323 10665

TECH LIBRARY KAFB, NM
0067324

NATIONAL ADVISORY COMMITTEE FOR AERONAUTICS

TECHNICAL NOTE 4323

NATURAL CONVECTION INSIDE A FLAT ROTATING CONTAINER

By Simon Ostrach and Willis H. Braun

Lewis Flight Propulsion Laboratory
Cleveland, Ohio

Washington
September 1958

AFMDC
TECHNICAL LIBRARY
AFL 2811

ERRATA

NACA TECHNICAL NOTE 4323

By Simon Ostrach and Willis H. Braun

September 1958

Page 6, equation (10): The second term on the right side should be $\frac{f}{\Omega^2 h}$ instead of $\frac{f}{\Omega f h}$.

Page 6, equation (11): The equation should read as follows:

$$\frac{1}{\gamma}\frac{Gr_\Omega}{Re_\Omega^2}\left\{u\frac{\partial\tau}{\partial r} + w\frac{\partial\tau}{\partial z} - \frac{\gamma K_\Omega}{Re_\Omega}\left[\left(\frac{\partial u}{\partial z}\right)^2 + \mathcal{O}\left(\frac{h^2}{R^2}\right)\right]\right\} = \frac{1}{PrRe_\Omega}\left[\left(\frac{h}{R}\right)^2\left(\frac{\partial^2\tau}{\partial r^2} + \frac{1}{r}\frac{\partial\tau}{\partial r}\right) + \frac{\partial^2\tau}{\partial z^2}\right]$$
$$- \frac{Gr_\Omega}{Re_\Omega^2}K_\Omega p_0\left(u\frac{\partial\tau}{\partial r} + w\frac{\partial\tau}{\partial z}\right)$$

Page 7: The second equation following equation (15) should be $\tau = -1$ instead of $\tau = 0$.

Page 8, equation (18): A bracket should be inserted between $J_0(\alpha r)$ and C_1. The bracket should be closed at the end of the equation.

Page 8, last line: The sentence should read, "A sketch of the streamlines in a radial section is given in figure 5."

NASA - Langley Field, Va.

Issued 2-18-59

TECH LIBRARY KAFB, NM

0067324

NATIONAL ADVISORY COMMITTEE FOR AERONAUTICS

TECHNICAL NOTE 4323

NATURAL CONVECTION INSIDE A FLAT ROTATING CONTAINER

By Simon Ostrach and Willis H. Braun

4819

CK-1

SUMMARY

Froude number is found to be the parameter that determines the effect of body rotations on internal natural convection flows. Explicit forms of Froude number are determined for the cases of predominant rotation and predominant axial force. In a heated cylindrical container no significant convective effects are generated by rotations alone. Moreover, rotation tends to inhibit the flow and heat transfer generated by an axial body force in such a configuration. Insertion of radial vanes in the container eliminates the detrimental effects of rotation and improves the heat transfer.

INTRODUCTION

A novel application of natural convection to yield a lightweight, efficient, and simple heat sink is described in reference 1. The scheme described therein, which permits turbine blades to operate successfully in a high-temperature gas, is that a liquid is circulated through cylindrical cavities in the blades by natural convection generated by centrifugal force. One might then wonder whether the same idea might also be employed in another difficult problem, namely, that of cooling a high-speed vehicle entering the earth's atmosphere. In such a case, two body forces are available, the force of retardation by the atmosphere and the centrifugal force generated by the rotation of the vehicle about its axis.

Despite the practical demonstration of the basic idea in reference 1, relatively little information on natural convection exists for internal flows and for body forces which vary temporally or spatially. The problem of natural convection in a reentering vehicle is further complicated by the simultaneous action of the two kinds of body forces in different directions.

This paper, therefore, presents an analysis of a somewhat idealized configuration which, nevertheless, contains some of the complications

associated with actual problems. In this way, the primary factors influencing the phenomenon are determined, and the relative importance of some of the interacting effects can be evaluated. This work thus represents an initial study of the use of fluids driven by body forces for heat sinks in rotating reentry vehicles.

DEFINITION OF THE PROBLEM

A fluid contained in a high-speed vehicle which enters the earth's atmosphere is subject to an apparent gravitational force. A representative deceleration curve for such a vehicle calculated from the equations in reference 2 is presented in figure 1. Clearly, the body force is strongly time-dependent. If a representative calculation of the heat flux to the vehicle made from reference 2 is superposed on figure 1, it can be seen that a lag exists between the heating of the body and the appearance of a large retardation force. During the initial period of heating there is no driving force for the convective cooling process. One wonders whether the heat transfer to the internal fluid might be increased by rotating the vehicle nose about its axis. Centrifugal force would then generate the motion as in the turbine-cooling problem.

Rotation may be of value even after the decelerating force has begun to act. The decelerating force acts in the axial direction (see fig. 2) while the internal fluid near the external stagnation point of the blunt nose is heated from below; that is, the heating in the stagnation region imposes a negative temperature gradient parallel to the retardation force. In such a configuration the fluid remains at rest until a critical value of the Rayleigh number (PrGr) is attained (see ref. 3). Thus, even for appreciable retardation forces, the internal fluid is ineffective as a coolant. Therefore, a large body force (such as a centrifugal force) transverse to the temperature gradient might increase the effectiveness of the heat sink by starting the motion sooner. Also, the rotational effects must be evaluated because rotation of the vehicle may be used for aerodynamic stability and, therefore, be inherent to the system.

Specific consideration is given in this report to the flow and heat transfer of a fluid subject to an axial body force inside a rotating-right circular cylinder of small height (see fig. 3). In this way, the rotational effects can be evaluated, and internal conditions in the vicinity of the external stagnation region of blunt bodies are simulated. In order to avoid the complications introduced by unsteady effects, we shall assume that the retardation force is constant and concentrate on the effects of rotation of the vehicle on the internal flow. Therefore, two cases will be considered: (1) where rotation predominates, that is, where the internal motion is essentially due to rotation of the container;

and (2) where the deceleration force predominates, that is, where a flow is generated by the axial body force with heating irrespective of whether the container is rotating.

ANALYSIS

The governing equations for the coolant are those expressing the conservation of mass, momentum, and energy in cylindrical coordinates for compressible, viscous, and heat-conducting fluids subject to a body force. With fluid properties constant, these equations are, respectively:

Continuity:

$$\frac{\partial \rho}{\partial t} + \frac{1}{\bar{r}} \frac{\partial}{\partial \bar{r}} (\rho \bar{r} U) + \frac{1}{\bar{r}} \frac{\partial(\rho V)}{\partial \theta} + \frac{\partial(\rho W)}{\partial \bar{z}} = 0 \tag{1}$$

Radial momentum:

$$\rho \frac{\partial U}{\partial t} + \rho\left(U \frac{\partial U}{\partial \bar{r}} + \frac{V}{\bar{r}} \frac{\partial U}{\partial \theta} + W \frac{\partial U}{\partial \bar{z}} - \frac{V^2}{\bar{r}}\right) = - \frac{\partial P}{\partial \bar{r}} + \mu\left(\nabla^2 U - \frac{U}{\bar{r}^2} - \frac{2}{\bar{r}^2} \frac{\partial V}{\partial \theta}\right) + \frac{\mu}{3} \frac{\partial X}{\partial \bar{r}} \tag{2}$$

Azimuthal momentum:

$$\rho \frac{\partial V}{\partial t} + \rho\left(U \frac{\partial V}{\partial \bar{r}} + \frac{V}{\bar{r}} \frac{\partial V}{\partial \theta} + W \frac{\partial V}{\partial \bar{z}} + \frac{UV}{\bar{r}}\right) = - \frac{1}{\bar{r}} \frac{\partial P}{\partial \theta}$$

$$+ \mu\left(\nabla^2 V + \frac{2}{\bar{r}} \frac{\partial U}{\partial \theta} - \frac{V}{\bar{r}^2}\right) + \frac{\mu}{3\bar{r}} \frac{\partial X}{\partial \theta} \tag{3}$$

Axial momentum:

$$\rho \frac{\partial W}{\partial t} + \rho\left(U \frac{\partial W}{\partial \bar{r}} + \frac{V}{\bar{r}} \frac{\partial W}{\partial \theta} + W \frac{\partial W}{\partial \bar{z}}\right) = - \frac{\partial P}{\partial \bar{z}} - \rho f + \mu \nabla^2 W + \frac{1}{3} \mu \frac{\partial X}{\partial \bar{z}} \tag{4}$$

Energy:

$$\rho c_v \frac{\partial T}{\partial t} + \rho c_v\left(U \frac{\partial T}{\partial \bar{r}} + \frac{V}{\bar{r}} \frac{\partial T}{\partial \theta} + W \frac{\partial T}{\partial \bar{z}}\right) = k \nabla^2 T + \Phi - PX \tag{5}$$

where

$$\nabla^2 \equiv \frac{\partial^2}{\partial \bar{r}^2} + \frac{1}{\bar{r}} \frac{\partial}{\partial \bar{r}} + \frac{1}{\bar{r}^2} \frac{\partial^2}{\partial \theta^2} + \frac{\partial}{\partial \bar{z}^2}$$

4819

CK-1 back

$$\chi = \frac{\partial U}{\partial \bar{r}} + \frac{U}{\bar{r}} + \frac{1}{\bar{r}}\frac{\partial V}{\partial \theta} + \frac{\partial W}{\partial \bar{z}}$$

All symbols are defined in appendix A.

Predominant Rotation

The case of predominant rotation simulates conditions encountered by an internal fluid, both during the time shortly after reentry when the deceleration force is negligible and in the stagnation region before a flow has been established by the instability. 4819

The state equation

$$\rho = \rho(T,P)$$

for a fluid may be approximated near a reference condition (0) by

$$\rho = \rho_0\left[1 - \beta(T - T_0) + \bar{k}(p - p_0)\right]$$

where β is the coefficient of volume expansion and $\bar{k}$ is the isothermal compressibility. It can be shown from the conservation of mass in the closed vessel to be considered here (fig. 3) that, if the heating (temperature difference) on the bottom and the cooling on the top are identical functions of the radius, and if there are no azimuthal or axial gradients of pressure, the pressure difference (from the reference state) vanishes identically. It is assumed here that the fluid in the container is heated and cooled symmetrically as described and that, even though some pressure gradients may exist, they have little effect on the density. (If a net heating of the contained fluid is desired, a small bulging of the container, properly distributed, will compensate the pressure increment.) Then, as for unconfined flows,

$$\rho = \rho_0\left[1 - \beta(T - T_0)\right]$$

Axisymmetric flow is assumed in the cylinder of figure 3. The characteristic velocity of the fluid must be proportional to ΩR, and it should depend on a representative temperature difference between the heated and unheated states. Let T_0 be the temperature of the unheated state and T_l the temperature at the center of the lower (heated) plate. By the condition of symmetric heating and cooling, the temperature at the center of the upper plate is $T_0 - (T_l - T_0)$. If the temperature and density of the fluid are written as

$$T = T_0 + 2(T_l - T_0)\tau$$

and

$$\rho = \rho_0\left[1 - 2\beta(T_l - T_0)\tau\right]$$

it is apparent that the perturbation parameter for the system is $\epsilon \equiv 2\beta(T_l - T_0)$. The analysis of appendix B, beginning with a general power dependence of the characteristic velocity upon ϵ, shows that only a linear dependence is consistent with the dynamics of the problem. Thus, the representative velocity is $\epsilon\Omega R$.

4819

It is now convenient to transform to dimensionless variables in a rotating system as follows:

$$\left.\begin{aligned} \bar{r} = Rr,\ \theta = \varphi + \Omega t,\ \bar{z} = hz \\ U = \epsilon\Omega Ru,\ V = \Omega R(r + \epsilon v),\ W = \epsilon\Omega R(h/R)w \\ P = \rho_0\Omega^2R^2(p_0 + \epsilon p) \end{aligned}\right\} \tag{6}$$

The basic equations (1) to (5) to zeroth order in ϵ reduce to

$$\frac{\partial p_0}{\partial r} = r;\ \frac{\partial p_0}{\partial z} = -\frac{fh}{(\Omega R)^2}$$

which imply a solid-body rotation of the fluid when there is no heating ($\epsilon = 0$). To first order in ϵ, that is, the perturbations from solid-body rotation due to heating, equations (1) to (5) are

$$\frac{\partial}{\partial r}(ru) + \frac{\partial}{\partial z}(rw) = 0 \tag{7}$$

$$\frac{Gr_\Omega}{Re_\Omega^2}\left(u\frac{\partial u}{\partial r} + w\frac{\partial u}{\partial z} - \frac{v^2}{r} + 2\tau v\right) + r\tau - 2v = -\frac{\partial p}{\partial r}$$
$$+ \frac{1}{Re_\Omega}\left[\left(\frac{h}{R}\right)^2\left(\frac{\partial^2 u}{\partial r^2} + \frac{1}{r}\frac{\partial u}{\partial r} - \frac{u}{r^2}\right) + \frac{\partial^2 u}{\partial z^2}\right] + \frac{1}{3}\frac{Gr_\Omega}{Re_\Omega^3}\left(\frac{h}{R}\right)^2\frac{\partial}{\partial r}\left(u\frac{\partial \tau}{\partial r} + w\frac{\partial \tau}{\partial z}\right) \tag{8}$$

$$\frac{Gr_\Omega}{Re_\Omega^2}\left(u\frac{\partial v}{\partial r} + w\frac{\partial v}{\partial z} + \frac{uv}{r} - 2\tau u\right) + 2u = \frac{1}{Re_\Omega}\left[\left(\frac{h}{R}\right)^2\left(\frac{\partial^2 v}{\partial r^2} + \frac{1}{r}\frac{\partial v}{\partial r} - \frac{v}{r^2}\right) + \frac{\partial^2 v}{\partial z^2}\right] \tag{9}$$

$$\frac{Gr_\Omega}{Re_\Omega^2}\left(u\frac{\partial w}{\partial r}+w\frac{\partial w}{\partial z}\right)=-\left(\frac{R}{h}\right)^2\frac{\partial p}{\partial z}+\frac{f}{\Omega f_h}\tau+\frac{1}{Re_\Omega}\left[\left(\frac{h}{R}\right)^2\left(\frac{\partial^2 w}{\partial r^2}+\frac{1}{r}\frac{\partial w}{\partial r}\right)+\frac{\partial^2 w}{\partial z^2}\right]$$

$$+\frac{1}{3}\frac{Gr}{Re_\Omega^3}\left(\frac{h}{R}\right)\frac{\partial}{\partial z}\left(u\frac{\partial\tau}{\partial r}+w\frac{\partial\tau}{\partial z}\right) \tag{10}$$

$$\frac{1}{\gamma}\frac{Gr_\Omega}{Re_\Omega^2}\left[u\frac{\partial\tau}{\partial z}-\frac{K_\Omega}{Re_\Omega}\dot{\theta}\left(u_z^2+\theta\frac{h^2}{R^2}\right)\right]=\frac{1}{PrRe_\Omega}\left[\left(\frac{h}{R}\right)^2\frac{\partial^2\tau}{\partial r^2}+\frac{1}{r}\cdot\frac{\partial\tau}{\partial r}+\frac{\partial^2\tau}{\partial z^2}\right]$$

$$-\frac{Gr_\Omega}{Re_\Omega^2}K_\Omega p_0\left(u\frac{\partial\tau}{\partial r}+w\frac{\partial\tau}{\partial z}\right) \tag{11}$$

The ratio Re_Ω^2/Gr_Ω is actually a Froude number and represents the ratio of inertia to buoyancy forces. In this particular case under consideration, the Froude number is large; in fact, from the definitions of the Reynolds and Grashof numbers based on Ω, the reciprocal of the Froude number is just ϵ. Therefore, the dominant inertia terms are the buoyancy and Coriolis terms, that is, the last two terms on the left side, respectively, of equation (8) and the last one on the left in equation (9). In the energy equation the convection and frictional heating terms are negligible with respect to the conduction term so that the heat transfer is not affected by the motion and is merely due to conduction. All this implies, of course, that large velocities cannot be obtained by applying a temperature gradient transverse to the centrifugal body force in such a rotating configuration. To understand this seemingly unusual result, let us solve the equations that result by omitting the negligible terms and assuming $h/R << 1$. Also, the parameter K_Ω is small for practical cases.

Equation (7) is unchanged, and equations (8) to (11) become, respectively,

$$\frac{1}{Re_\Omega}\frac{\partial^2 u}{\partial z^2}=\frac{\partial p}{\partial r}+r\tau-2v \tag{12}$$

$$\frac{1}{Re_\Omega}\frac{\partial^2 v}{\partial z^2}=2u \tag{13}$$

$$\frac{\partial p}{\partial z}=0 \tag{14}$$

$$\frac{\partial^2 \tau}{\partial z^2} = 0 \tag{15}$$

The boundary conditions on the upper and lower surfaces ($z = \pm 1/2$) are

$$u = v = w = 0$$

4819

At the upper surface, also,

$$\tau = 0$$

The thermal boundary conditions at the surface will be discussed a posteriori.

By following Davies (ref. 4) the velocity and temperature distributions are written as

$$u = \frac{2}{\alpha} J_1(\alpha r)\overline{U}(z) \qquad w = J_0(\alpha r)\overline{W}(z)$$

$$v = \frac{2}{\alpha} J_1(\alpha r)\overline{V}(z) \qquad \tau = \frac{2}{\alpha r} J_1(\alpha r)\overline{T}(z)$$

where $J_0(\alpha r)$ and $J_1(\alpha r)$ are zero- and first-order Bessel functions, respectively, and α is the first root of $J_1(\alpha) = 0$. Qualitatively, the assumed radial variations in u, v, and w lead to the loop flow shown in figure 4. The viscous boundary conditions at the radial boundary (end) of the cylinder are satisfied by u and v, but for the w component the viscous conditions are replaced by a slip condition. This is consistent with the omission of terms of order $(h/R)^2$ in the differential equation.

The system of equations (7), (12), (13), (14), and (15) can be combined to yield an ordinary equation for $\overline{V}$:

$$(Re_\Omega)^2\overline{V}^{v} + 4\overline{V}' = -2$$

with the boundary conditions

$$\overline{V}(1/2) = \overline{V}(-1/2) = 0,\ \overline{V}'(1/2) = \overline{V}'(-1/2) = 0,\ \overline{V}''(1/2) = \overline{V}''(-1/2) = 0$$

Solution of this boundary value problem then yields

$$u = \frac{2}{\alpha} J_1(\alpha r)\left(C_1 \sinh\sqrt{Re_\Omega}\, z \cos\sqrt{Re_\Omega}\, z - C_2 \cosh\sqrt{Re_\Omega}\, z \sin\sqrt{Re_\Omega}\, z\right) \tag{16}$$

$$v = \frac{2}{\alpha} J_1(\alpha r)\left(C_1 \cosh\sqrt{Re_\Omega}\, z \sin\sqrt{Re_\Omega}\, z + C_2 \sinh\sqrt{Re_\Omega}\, z \cos\sqrt{Re_\Omega}\, z - \frac{1}{2} z\right) \tag{17}$$

$$\begin{aligned} w = {} & \frac{1}{\sqrt{Re_\Omega}} J_0(\alpha r) C_1\left(\sinh \frac{\sqrt{Re_\Omega}}{2} \sin \frac{\sqrt{Re_\Omega}}{2} + \cosh \frac{\sqrt{Re_\Omega}}{2} \cos \frac{\sqrt{Re_\Omega}}{2}\right) \\ & + C_2\left(\cosh \frac{\sqrt{Re_\Omega}}{2} \cos \frac{\sqrt{Re_\Omega}}{2} - \sinh \frac{\sqrt{Re_\Omega}}{2} \sin \frac{\sqrt{Re_\Omega}}{2}\right) \\ & - C_1\left(\sinh\sqrt{Re_\Omega}\, z \sin\sqrt{Re_\Omega}\, z + \cosh\sqrt{Re_\Omega}\, z \cos\sqrt{Re_\Omega}\, z\right) \\ & - C_2\left(\cosh\sqrt{Re_\Omega}\, z \cos\sqrt{Re_\Omega}\, z - \sinh\sqrt{Re_\Omega}\, z \sin\sqrt{Re_\Omega}\, z\right) \end{aligned} \tag{18}$$

$$\tau = \frac{2}{\alpha r} J_1(\alpha r)(-z) \tag{19}$$

$$p = 0$$

where

$$C_1 = \frac{\cosh \frac{\sqrt{Re_\Omega}}{2} \sin \frac{\sqrt{Re_\Omega}}{2}}{4\left(\sinh^2 \frac{\sqrt{Re_\Omega}}{2} + \sin^2 \frac{\sqrt{Re_\Omega}}{2}\right)}; \quad C_2 = \frac{\sinh \frac{\sqrt{Re_\Omega}}{2} \cos \frac{\sqrt{Re_\Omega}}{2}}{4\left(\sinh^2 \frac{\sqrt{Re_\Omega}}{2} + \sin^2 \frac{\sqrt{Re_\Omega}}{2}\right)}$$

The dimensionless temperatures of the plates $\tau\left(r, \pm \frac{1}{2}\right)$ are, from equation (19), equal to $\mp(1/\alpha r)J_1(\alpha r)$. Any other temperature distribution could be specified at the lower surface by expanding $\alpha r \tau\left(r, -\frac{1}{2}\right)$ in a series in J_1.

The velocity distributions (eqs. (16) to (18)) are presented in figure 4. A strong Reynolds number effect is evident. For low Reynolds numbers the viscous effects are present over the entire cross section of the cylinder, but at the high Reynolds number a boundary layer appears in all three velocity component profiles. Accompanying the boundary layer is a diminution of the radial and axial components of velocity in the main body of the fluid while the azimuthal velocity distribution is nearly linear, lagging the rotation of the cylinder in the upper half and leading in the lower half. A sketch of the streamlines is given in figure 5.

Since the equations of motion have been solved, it is possible to explain why, physically, the velocities remain small. The driving force $r\tau$ in equation (12) is opposed by the pressure gradient, Coriolis force $(-2v)$, and viscous force. The pressure gradient balances that part of the driving force which is independent of z. At low Reynolds numbers the remainder of the driving force is opposed mainly by the viscous force, but at large Reynolds numbers the Coriolis force grows relatively larger and inhibits the flow. Consequently, the heat convection is negligible both for large and small Reynolds numbers, and the fluid essentially rotates as a rigid body.

4819

Figure 6 is a graphical illustration of the Coriolis force in the top of the cylinder. The Coriolis force has negative components in both the radial and angular directions. It opposes the azimuthal rotation of the fluid by the viscous force and the outward radial flow set up by the buoyancy force.

CK-2

It may be that flows of a cellular type will be obtained in this configuration if h/R is not negligibly small and the condition of axial symmetry is relaxed. However, it is doubtful that even then the heat transfer would be affected by the fluid motion. Thus, rotating a fluid container like that just considered does not significantly affect the heat transfer when the deceleration force is inoperative. In fact, the rotation may even be detrimental, for Chandrasekhar (ref. 5) has shown that in an unstable configuration the fluid motion is delayed by the action of Coriolis forces.

Since the Coriolis force due to the circumferential velocity component opposes the radial buoyancy force and thus negates convection effects and also may impede the unstable motion, it appears that significant convection could be obtained if the Coriolis forces were made negligible compared to the centrifugal force. The insertion of radial vanes appropriately spaced would arrange the circumstances by reducing the azimuthal velocity component (and, hence, the corresponding Coriolis term). The buoyancy effects due to centrifugal force would, in this way, be unopposed (excepting viscous forces) and could lead to large heat convection as in the turbine blades investigated by Schmidt (ref. 1).

Consider a sector between two vanes in such a divided flat cylinder (fig. 3(b)). It is anticipated that, in contrast to the previous configuration, the inertia forces will be of the same order of magnitude as the buoyancy forces. It follows that the representative velocity must be $\sqrt{\epsilon\Omega R}$ rather than $\epsilon\Omega R$. Then, upon the equations of motion (eqs. (1) to (5)) the following transformation to a dimensionless, rotating system is performed:

$$\bar{r} = Rr$$

$$\theta = (\Delta\varphi)y + \Omega t$$

$$\bar{z} = hz$$

$$U = \sqrt{\epsilon}\Omega Ru$$

$$V = \Omega Rr + \sqrt{\epsilon}\Omega R(\Delta\varphi)v$$

$$W = \sqrt{\epsilon}\Omega hw$$

4819

The new angular variable y takes values from 0 to 1. Again, the state variables are given by

$$P = \rho_0\Omega^2R^2(p_0 + \epsilon p)$$

$$\rho = \rho_0(1 - \epsilon\tau)$$

$$T - T_0 = 2\tau(T_l - T_0)$$

The transformed equations, with the small compressibility and dissipation terms omitted for simplicity, are

No heating:

$$p_{0r} = r$$

$$p_{0y} = 0$$

$$p_{0z} = -\frac{fh}{(\Omega R)^2}$$

Continuity:

$$(ur)_r + v_y + (rw)_z = 0$$

Momentum:

$$uu_r + \frac{v}{r}u_y + wu_z - (\Delta\varphi)^2\frac{v^2}{r^2} + r\tau - \frac{\Delta\varphi}{\sqrt{\epsilon}}2v = -p_r$$

$$+ \frac{1}{\sqrt{Gr_\Omega}}\left[u_{zz} + \left(\frac{h}{R\,\Delta\varphi}\right)^2 u_{yy} + \left(\frac{h}{R}\right)^2\left(u_{rr} + \frac{u_r}{r} - \frac{u}{r^2} - \frac{2}{r^2}v_y\right)\right]$$

$$(\Delta\varphi)^2\left(uv_r + \frac{v}{r}\,v_y + wv_z + \frac{uv}{r}\right) + \frac{\Delta\varphi}{\sqrt{\epsilon}}\,2u = -\frac{1}{r}\,p_y$$

$$+ (\Delta\varphi)^2\,\frac{1}{\sqrt{Gr_\Omega}}\left[v_{zz} + \left(\frac{h}{R\,\Delta\varphi}\right)^2\left(v_{yy} + 2\,\frac{u_y}{r}\right) + \left(\frac{h}{R}\right)^2\left(v_{rr} + \frac{v_r}{r} - \frac{v}{r^2}\right)\right]$$

$$\left(\frac{h}{R}\right)^2\left(uw_r + \frac{v}{r}\,w_y + ww_z\right) = -p_z + \frac{fh}{(\Omega R)^2}\,\tau$$

$$+ \frac{1}{\sqrt{Gr_\Omega}}\left(\frac{h}{R}\right)^2\left[w_{zz} + \left(\frac{h}{R\,\Delta\varphi}\right)^2 w_{yy} + \left(\frac{h}{R}\right)^2\left(w_{rr} + \frac{w_r}{r}\right)\right]$$

Energy:

$$u\tau_r + \frac{v}{r}\,\tau_y + w\tau_z = \frac{\gamma}{Pr}\,\frac{1}{\sqrt{Gr_\Omega}}\left[\tau_{zz} + \left(\frac{h}{R\,\Delta\varphi}\right)^2 \tau_{yy} + \left(\frac{h}{R}\right)^2\left(\tau_{rr} + \frac{\tau_r}{r}\right)\right]$$

If the sector is made slender by setting

$$\frac{h}{R} \ll 1,\ \Delta\varphi \ll 1$$

the momentum and energy equations reduce to

$$uu_r + \frac{v}{r}\,u_y + wu_z + r\tau - \frac{\Delta\varphi}{\sqrt{\epsilon}}\,2v = -p_r + \frac{1}{\sqrt{Gr_\Omega}}\left[u_{zz} + \left(\frac{h}{R\,\Delta\varphi}\right)^2 u_{yy}\right]$$

$$\frac{\Delta\varphi}{\sqrt{\epsilon}}\,2u = -\frac{1}{r}\,p_y$$

$$\frac{fh}{(\Omega R)^2}\,\tau = p_z$$

$$u\tau_r + \frac{v}{r}\,\tau_{yy} + w\tau_z = \frac{\gamma}{Pr\sqrt{Gr_\Omega}}\left[\tau_{zz} + \left(\frac{h}{R\,\Delta\varphi}\right)^2 \tau_{yy}\right] + \gamma K_\Omega\left(\frac{R}{h}\right)^2 \frac{u_z^2}{\sqrt{Gr_\Omega}}$$

In these equations the inertia and heat convection terms are significant in contrast to the previous case of the complete cylinder. The presence of the new parameter $\Delta\varphi$ controls the Coriolis force and makes this possible. The magnitude of the Coriolis terms is determined by the

4819

CK-2 back

square root of a Froude number $\Delta\varphi/\sqrt{\epsilon}$, and the ratio $h/(R\ \Delta\varphi)$ controls a portion of the viscous force. Making $\Delta\varphi$ very small reduces the Coriolis force by preventing the acceleration of the fluid to appreciable azimuthal velocities relative to the rotating system. At the same time, however, the ratio $h/(R\ \Delta\varphi)$ may become large, which indicates the flow has become constricted and causes large viscous retardation. Probably an optimum geometrical arrangement would be

$$\frac{h}{R} \leq \Delta\varphi \leq \sqrt{\epsilon}$$

4819

The previous equations resemble those for natural convection over a heated vertical flat plate. However, the driving force here is the centrifugal force, which can be many times larger than the earth's gravitational force. Hence, the convective heat transfer in such a rotating configuration can be much larger than that due to gravitational effects, as was demonstrated in the Schmidt turbine (ref. 1).

It can be seen from the equations that the Coriolis and viscous forces in a rotating system will always have their adverse effect. All this means, however, is that convective heat transfer produced by centrifugal forces in a rotating sector can never be as large as that over a flat plate in a gravitational field of corresponding magnitude.

Predominant Deceleration Force

The effects of rotation on a flow generated by the deceleration force must still be evaluated because the reentry vehicle may be rotating about its axis for aerodynamic stability reasons. The deceleration force will establish flows in a flat cylindrical configuration (fig. 3) after the critical Rayleigh number is surpassed. Also, if the retardation force is transverse to a temperature gradient, as it would be, for example, in a curved container like a spherical shell, it would immediately generate a conventional natural convection flow. Let us, therefore, analyze the case where the flow is essentially due to the retardation force.

For the inertia and buoyancy forces to be of equal order of magnitude, the characteristic velocity must be $\sqrt{\epsilon fh}$. Accordingly, make the following transformation from the inertial coordinates to dimensionless rotating coordinates:

$$U = \sqrt{\epsilon fh}u \qquad V = \sqrt{\epsilon fh}v + \Omega Rr \qquad W = \frac{h}{R}\sqrt{\epsilon fh}w$$

$$\bar{r} = Rr \qquad \theta = \varphi + \Omega t \qquad \bar{z} = hz$$

$$P = \rho_0 fh(p_0 + \epsilon p) \qquad \rho = \rho_0(1 - \epsilon\tau) \qquad \tau = (T - T_0)/2(T_l - T_0)$$

In general, u, v, and w are functions of the angular velocity as well as the coordinates. Note that, if Ω is zero, the flow is due entirely to the action of the axial body force and the heating. On the other hand, for no heating the flow is again a solid-body rotation. This is clear from the equations since, for $\epsilon = 0$, equations (2), (3), and (4) become, respectively,

$$\frac{\partial p_0}{\partial r} = \frac{(\Omega R)^2}{fh} r, \qquad \frac{\partial p}{\partial \varphi} = 0, \qquad \frac{\partial p_0}{\partial z} = -1$$

4819

When $\epsilon \neq 0$, and again when small compressibility and dissipation terms are omitted, the equations of motion become, to lowest order in ϵ,

$$\frac{\partial}{\partial r}(ru) + \frac{\partial v}{\partial \varphi} + \frac{\partial}{\partial z}(rw) = 0 \tag{20}$$

$$u\frac{\partial u}{\partial r} + \frac{v}{r}\frac{\partial u}{\partial \varphi} + w\frac{\partial u}{\partial z} - \frac{v^2}{r} - 2\omega v = -\frac{\partial p}{\partial r}$$
$$+ \frac{1}{\sqrt{Gr}}\frac{R}{h}\left[\frac{\partial^2 u}{\partial z^2} + \left(\frac{h}{R}\right)^2\left(\frac{\partial^2 u}{\partial r^2} + \frac{1}{r}\frac{\partial u}{\partial r} + \frac{1}{r^2}\frac{\partial^2 u}{\partial \varphi^2} - \frac{u}{r^2} - \frac{2}{r^2}\frac{\partial v}{\partial \varphi}\right)\right] \tag{21}$$

$$u\frac{\partial v}{\partial r} + \frac{v}{r}\frac{\partial v}{\partial \varphi} + w\frac{\partial v}{\partial z} + 2\omega u + \frac{uv}{r} = -\frac{1}{r}\frac{\partial p}{\partial \varphi}$$
$$+ \frac{1}{\sqrt{Gr}}\frac{R}{h}\left[\frac{\partial^2 v}{\partial z^2} + \left(\frac{h}{R}\right)^2\left(\frac{\partial^2 v}{\partial r^2} + \frac{1}{r}\frac{\partial v}{\partial r} + \frac{1}{r^2}\frac{\partial^2 v}{\partial \varphi^2} + \frac{2}{r^2}\frac{\partial u}{\partial \varphi} - \frac{v}{r^2}\right)\right] \tag{22}$$

$$\left(\frac{h}{R}\right)^2\left(u\frac{\partial w}{\partial r} + \frac{v}{r}\frac{\partial w}{\partial \varphi} + w\frac{\partial w}{\partial z}\right) = -\frac{\partial p}{\partial z} + \tau$$
$$+ \left(\frac{h}{R}\right)^2\left(\frac{1}{\sqrt{Gr}}\frac{R}{h}\right)\left[\frac{\partial^2 w}{\partial z^2} + \left(\frac{h}{R}\right)^2\left(\frac{\partial^2 w}{\partial r^2} + \frac{1}{r}\frac{\partial w}{\partial r} + \frac{1}{r^2}\frac{\partial^2 w}{\partial \varphi^2}\right)\right] \tag{23}$$

$$u\frac{\partial \tau}{\partial r} + \frac{v}{r}\frac{\partial \tau}{\partial \varphi} + w\frac{\partial \tau}{\partial z} = \frac{\gamma}{Pr}\frac{1}{\sqrt{Gr}}\frac{R}{h}\left[\frac{\partial^2 \tau}{\partial z^2} + \left(\frac{h}{R}\right)^2\left(\frac{\partial^2 \tau}{\partial r^2} + \frac{1}{r}\frac{\partial \tau}{\partial r} + \frac{1}{r^2}\frac{\partial \tau}{\partial \varphi^2}\right)\right] \tag{24}$$

In these equations,

$$\omega \equiv \frac{\Omega R}{\sqrt{\epsilon f h}}, \qquad \sqrt{Gr} \equiv \frac{\sqrt{\epsilon f h}\,h}{\nu}$$

The parameter ω is proportional to the Froude number. In the case being considered here ω assumes small values by definition because the numerator depends on the rotation and the denominator depends on the (predominant) retardation force. (In the previous case, the inertia and buoyancy effects both depended only on the rotation with the consequence that the Froude number was independent of rotation.) Therefore, with $\omega \lesssim 1$, the inertia terms in equations (21) and (22) having ω as a coefficient are, at most, of the same order as the other like terms. The equations look like the conventional boundary-layer equations, and the inertia and convection effects are important. The heat transfer will be greater than that due to conduction alone.

An examination of the foregoing equations shows that a steady cellular flow, as occurs with heating a horizontal surface from below (ref. 3), is affected by a small rotation to a different order of magnitude than an axisymmetric flow. Consider first the cellular flow. With $\Omega = 0$, the three velocity components of each cell are of the same order of magnitude. The first momentum equation (eq. (21)) shows that the rotation will affect this flow to first order in ω. The preceding analysis of the flat cylinder with rotation only and the analysis of the unstable static configuration (ref. 3) suggest that the effect will be adverse. Thus, it is expected that, in cellular flow generated by an axial body force, rotation will reduce the heat transfer.

Second, consider a steady axisymmetric flow with zero azimuthal velocity component. When a small rotation is imposed, the azimuthal velocity is properly represented by

$$v = \omega v_1$$

Since the property of axisymmetry is retained ($\partial/\partial\varphi \equiv 0$), it is evident that the equations are affected (through the Coriolis and centrifugal force terms) only to order ω^2. Consequently, the rotation will have negligible effect upon this type of natural convection flow.

CONCLUSIONS

The analysis presented herein indicates that the Froude number is the parameter that determines the relative effect of body rotation on internal natural convection flows. In flows with large Froude number (e.g., motions induced solely by rotation of a heated cylinder), the

action of the Coriolis force prevents appreciable convection of heat. Although the Coriolis force inhibits convective heat transfer somewhat even for Froude numbers of unit order of magnitude (rotating sector), considerable convection is obtained because the driving force can be greatly increased. Flows that have been set up by a strong external body force have a small Froude number and are not greatly affected by rotation of the container, especially if they have axial symmetry.

A practical conclusion to be drawn from these results concerns the use of large centrifugal forces to drive natural convection cooling. Such a scheme will be successful only if the Coriolis force is reduced by limiting the azimuthal extent of the cooling passage. This, in turn, increases the viscous forces. Nevertheless, such cooling arrangements can greatly affect heat-transfer rates, yielding rates many times higher than those using the gravitational field, as shown by Schmidt's tests on turbine blades.

Lewis Flight Propulsion Laboratory
National Advisory Committee for Aeronautics
Cleveland, Ohio, June 17, 1958

APPENDIX A

SYMBOLS

See each section for specific definitions of the nondimensional quantities.

A	acceleration of vehicle
c_p	specific heat at constant pressure
c_v	specific heat at constant volume
f	negative of z-component of body force per unit mass
Gr	Grashof number, $2\beta(T_l - T_0)fh^3/\nu^2$
Gr_Ω	Grashof number due to rotation, $2\beta\Omega^2h^4(T_l - T_0)/\nu^2$
H	heat transferred per unit area per unit time
h	height
K_Ω	frictional heating parameter, $\beta(\Omega R)^2/c_p$
k	thermal conductivity coefficient
P	pressure
Pr	Prandtl number, $c_p\mu/k$
p	nondimensional pressure
R	radius
Re_Ω	Reynolds number due to rotation, $\Omega h^2/\nu$
r	nondimensional radial coordinate
$\bar{r}$	radial coordinate
T	temperature
t	time
U,V,W	velocity components in radial, azimuthal, and axial directions, respectively

4819

CK-3

$\overline{U},\overline{V},\overline{W}$ dimensionless velocity profiles

u,v,w nondimensional velocity components

y dimensionless angular coordinate in sector

z nondimensional axial coordinate

$\overline{z}$ axial coordinate

β fluid volumetric expansion coefficient, $\rho\left[\frac{\partial(1/\rho)}{\partial T}\right]_P$

γ ratio of specific heats

ϵ constant, $2\beta(T_l - T_0)$

θ angular coordinate in inertial coordinate system

μ absolute viscosity coefficient

ν kinematic viscosity coefficient

ρ density

τ dimensionless temperature difference

Φ dissipation function

φ angular coordinate in rotating coordinate system

Ω angular velocity

ω $\Omega R/\sqrt{\epsilon f h}$

Subscripts:

l center of lower surface

max maximum

0 unheated state

APPENDIX B

ORDER OF MAGNITUDE OF VELOCITY COMPONENTS

Instead of the relations (6), let a more general dependence of the velocity components on ϵ be employed:

$$\left.\begin{aligned} &U = \Omega R\epsilon^m u \qquad V = \Omega R(r + \epsilon^n v) \qquad W = \Omega R\epsilon^m w \\ &\bar{r} = Rr \qquad \bar{z} = hz \qquad P = \rho_0\Omega^2R^2(p_0 + \epsilon^l p) \\ &\rho = \rho_0(1 - \epsilon\tau) \qquad \tau \equiv (T - T_0)/2(T_l - T_0) \qquad m,n,l > 0 \end{aligned}\right\} \tag{B1}$$

Equations (B1) are appropriate for a flow which increases with external heating and reduces to solid-body rotation when there is no heating. Substituting into the governing equations (1) to (5), letting $h/R \to 0$, and neglecting compressibility and dissipation terms yield

$$\left.\begin{aligned} &\epsilon^{2m}(uu_r + wu_z) - \epsilon^{2n}\frac{v^2}{r} + \epsilon r\tau - \epsilon^n 2v = -\epsilon^l p_r + \epsilon^m Re_\Omega^{-1} u_{zz} \\ &\epsilon^{m+n}(uv_r + wv_z + uv/r) + \epsilon^m 2u = \epsilon^n Re_\Omega^{-1} v_{zz} \\ &p_z = 0 \end{aligned}\right\} \tag{B2}$$

In the first of equations (B2), no term can be of greater order of magnitude than the driving force $\epsilon r\tau$. Hence, $m = n = l = 1$. Then equations (B1) become identical to (6) and equations (B2) become

$$\left.\begin{aligned} &\epsilon(uu_r + wu_z) + r\tau - 2v = -p_r + Re_\Omega^{-1} u_{zz} \\ &\epsilon(uv_r + wv_z + uv/r) + 2u = Re_\Omega^{-1} v_{zz} \\ &p_z = 0 \end{aligned}\right\} \tag{B3}$$

If any value other than 1 is chosen for the indices m and n, the Coriolis term in either one or the other of equations (B3) will dominate, and a null solution will result. The energy equation becomes

$$(\epsilon/\gamma)(u\tau_r + w\tau_z) = (PrRe_\Omega)^{-1}\tau_{zz} \tag{B4}$$

4819

From the definitions

$$Re_{\Omega} = \frac{\Omega h^2}{\nu}, \qquad Gr_{\Omega} = \frac{\epsilon \Omega^2 h^4}{\nu^2}$$

it follows that

$$\epsilon \equiv \frac{Gr_{\Omega}}{Re_{\Omega}^2}$$

This accounts for the form of equations (8) to (11).

REFERENCES

1. Schmidt, Ernst H. W.: Heat Transmission by Natural Convection at High Centrifugal Acceleration in Water-Cooled Gas-Turbine Blades. Proc. Gen. Discussion on Heat Transfer, ASME, Sept. 11-13, 1951.

2. Allen, H. Julian, and Eggers, A. J., Jr.: A Study of the Motion and Aerodynamic Heating of Missiles Entering the Earth's Atmosphere at High Supersonic Speeds. NACA TN 4047, 1957. (Supersedes NACA RM A53D28.)

3. Rayleigh: On Convection Currents in a Horizontal Layer of Fluid, when the Higher Temperature is on the Under Side. Phil. Mag. and Jour. Sci., ser. 6, vol. 32, no. 192, Dec. 1916, pp. 529-547.

4. Davies, T. V.: The Flow of a Liquid Which is Heated from Below. Sci. Rep. 2, Dept. Meteorology, M.I.T., Apr. 1, 1952.

5. Chandrasekhar, S.: The Instability of a Layer of Fluid Heated Below and Subject to Coriolis Forces. Proc. Roy. Soc. (London), ser. A, vol. 217, May 7, 1953, pp. 306-327.

4819

CK-3 back

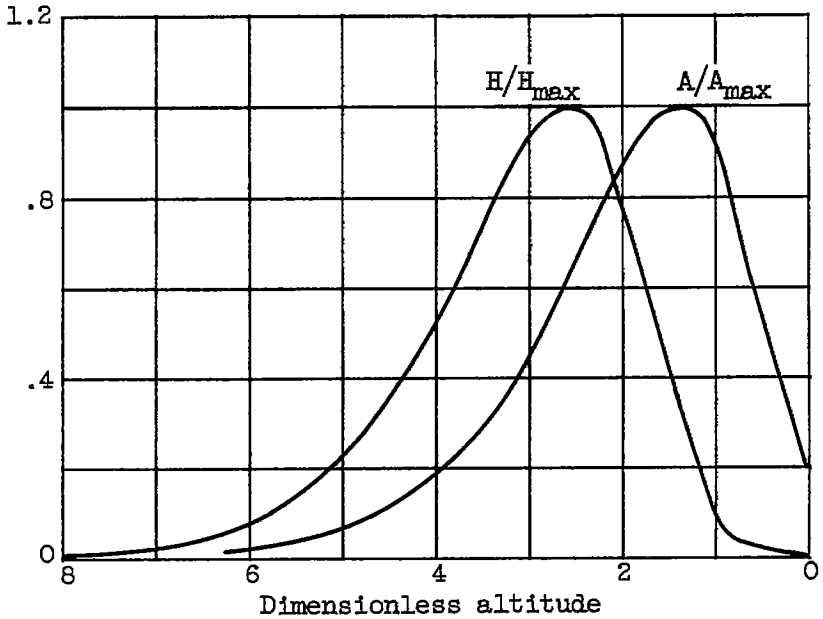

Figure 1. - Heat flux and deceleration as function of altitude for a representative reentry-type vehicle.

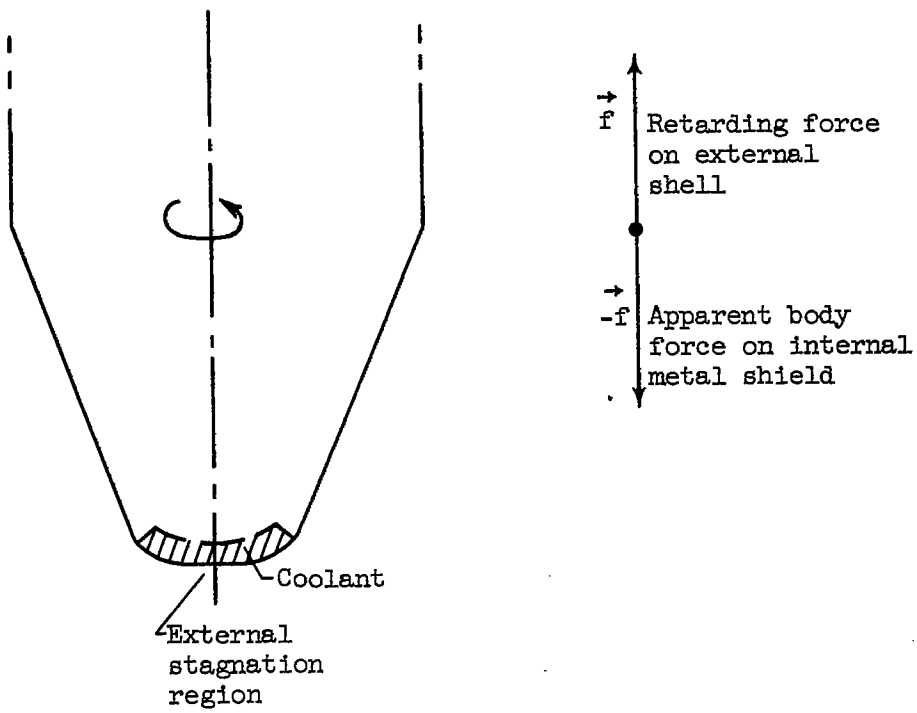

Figure 2. - Cooling shield in a decelerating nose cone.

4819

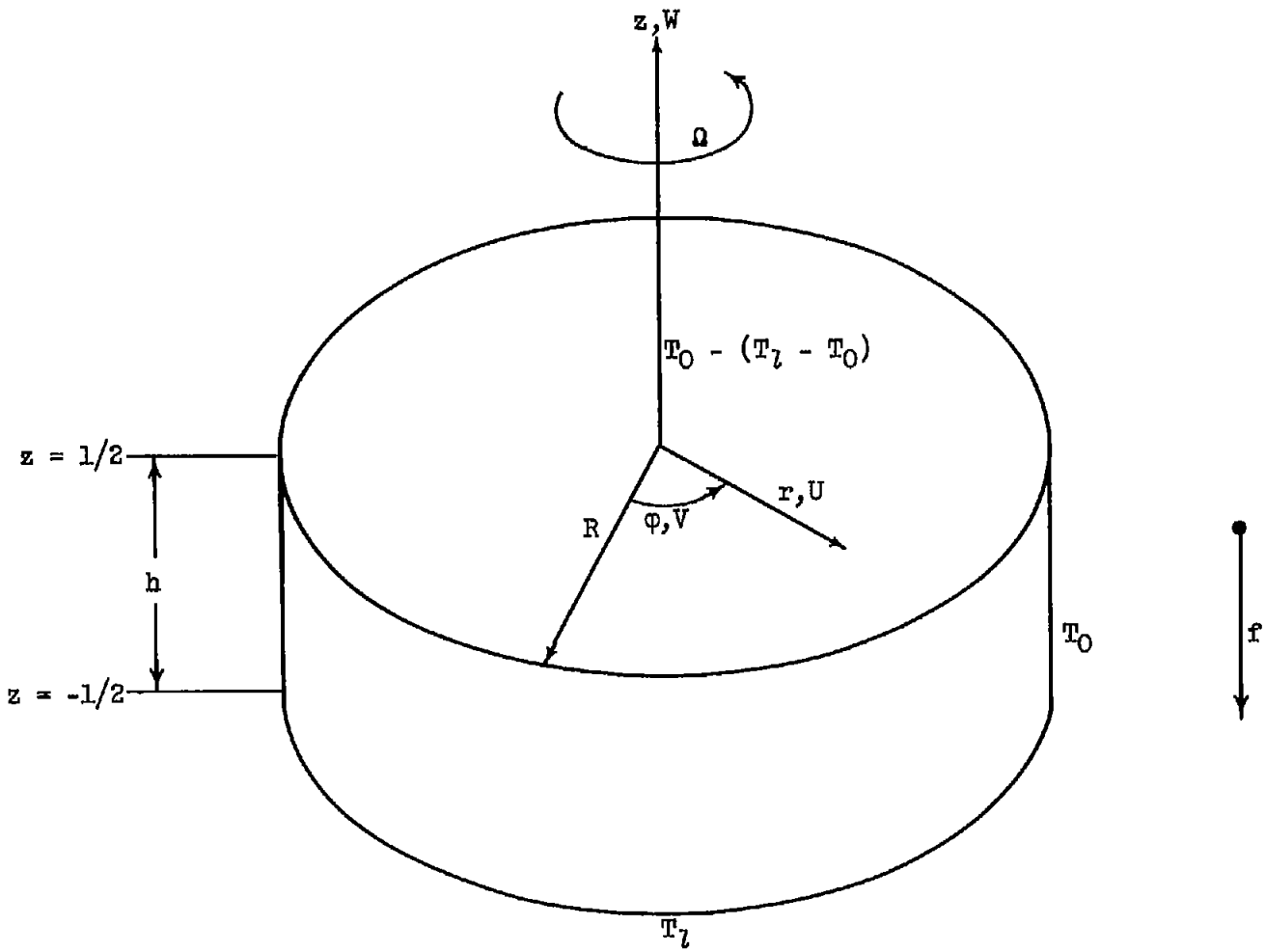

(a) Flat circular cylinder.

Figure 3. - Schematic sketch of configuration for flows in rotating containers.

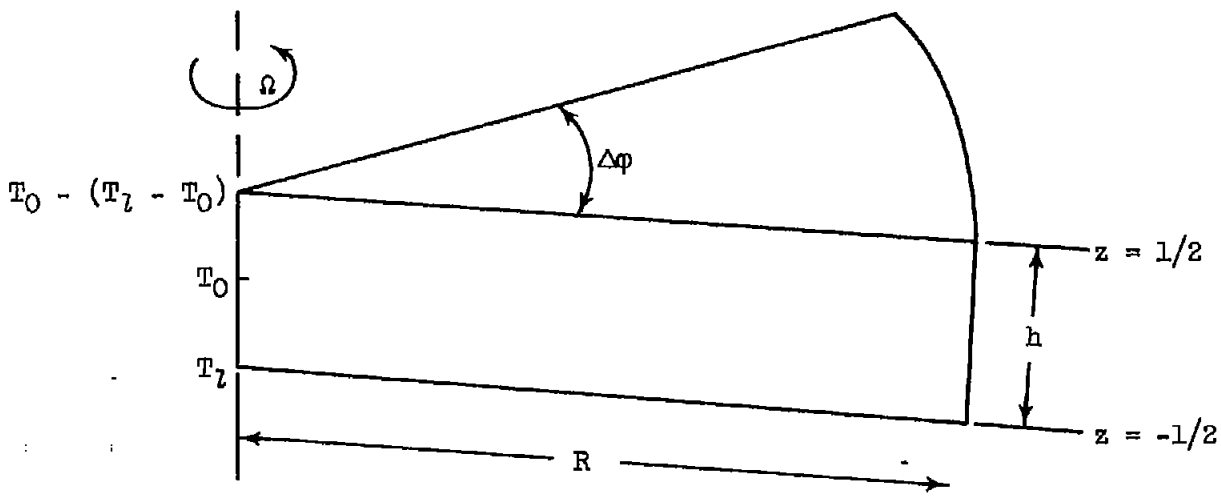

(b) Sector of a rotating cylinder.

Figure 3. - Concluded. Schematic sketch of configuration for flows in rotating containers.

4819

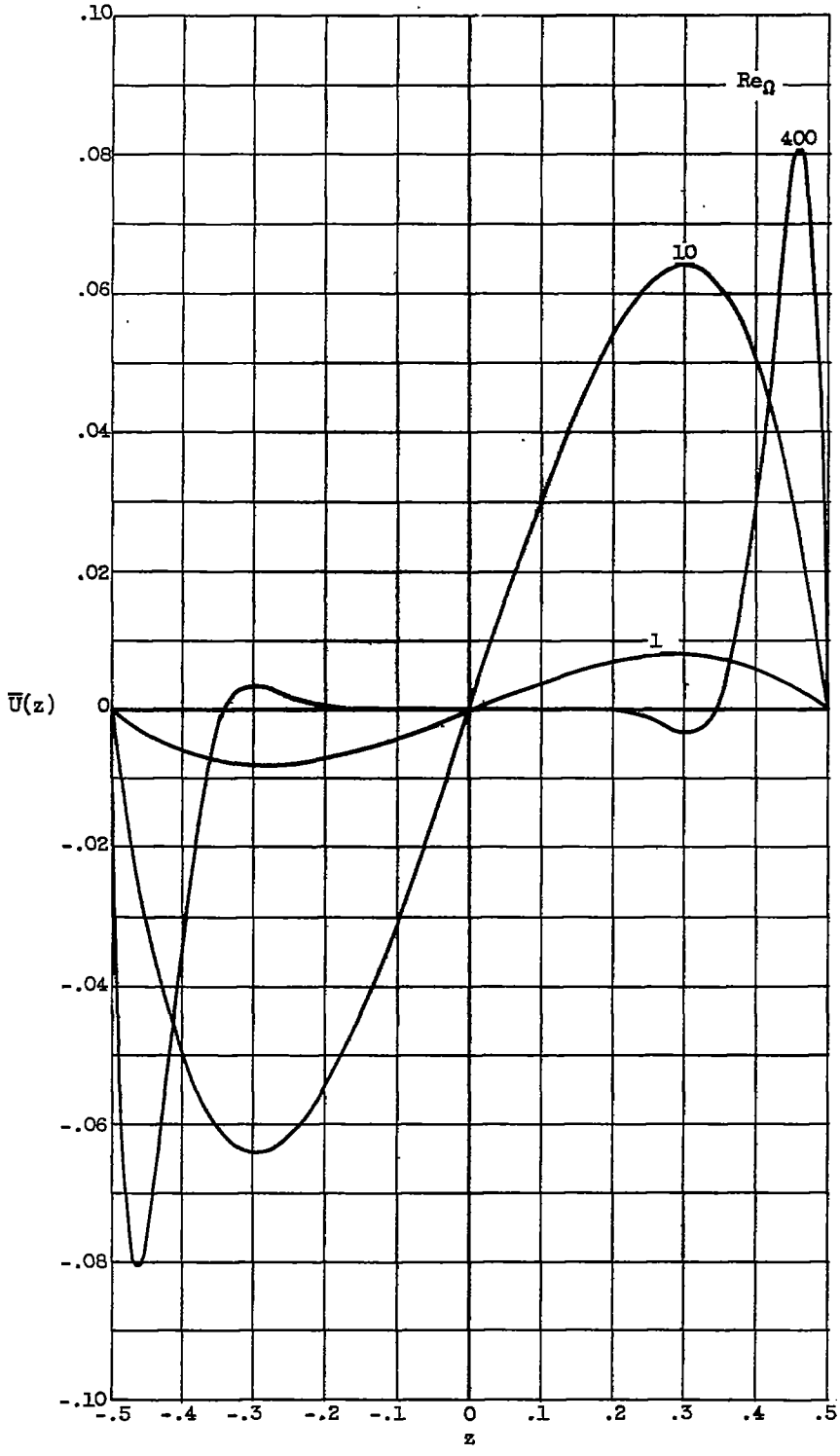

(a) Radial components.

Figure 4. - Velocity profiles in rotating cylinder.

4819

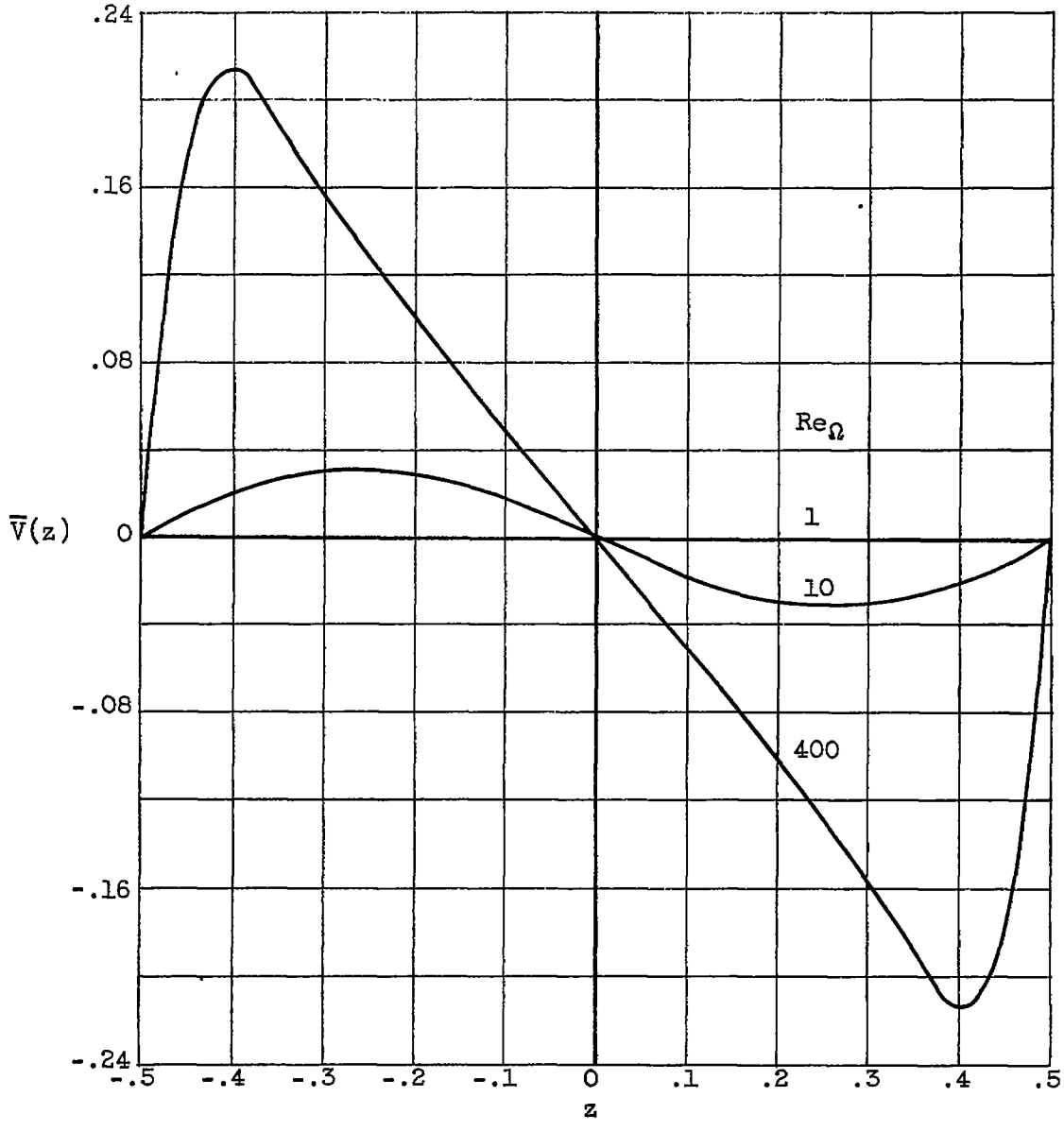

(b) Azimuthal component.

Figure 4. - Continued. Velocity profiles in rotating cylinder.

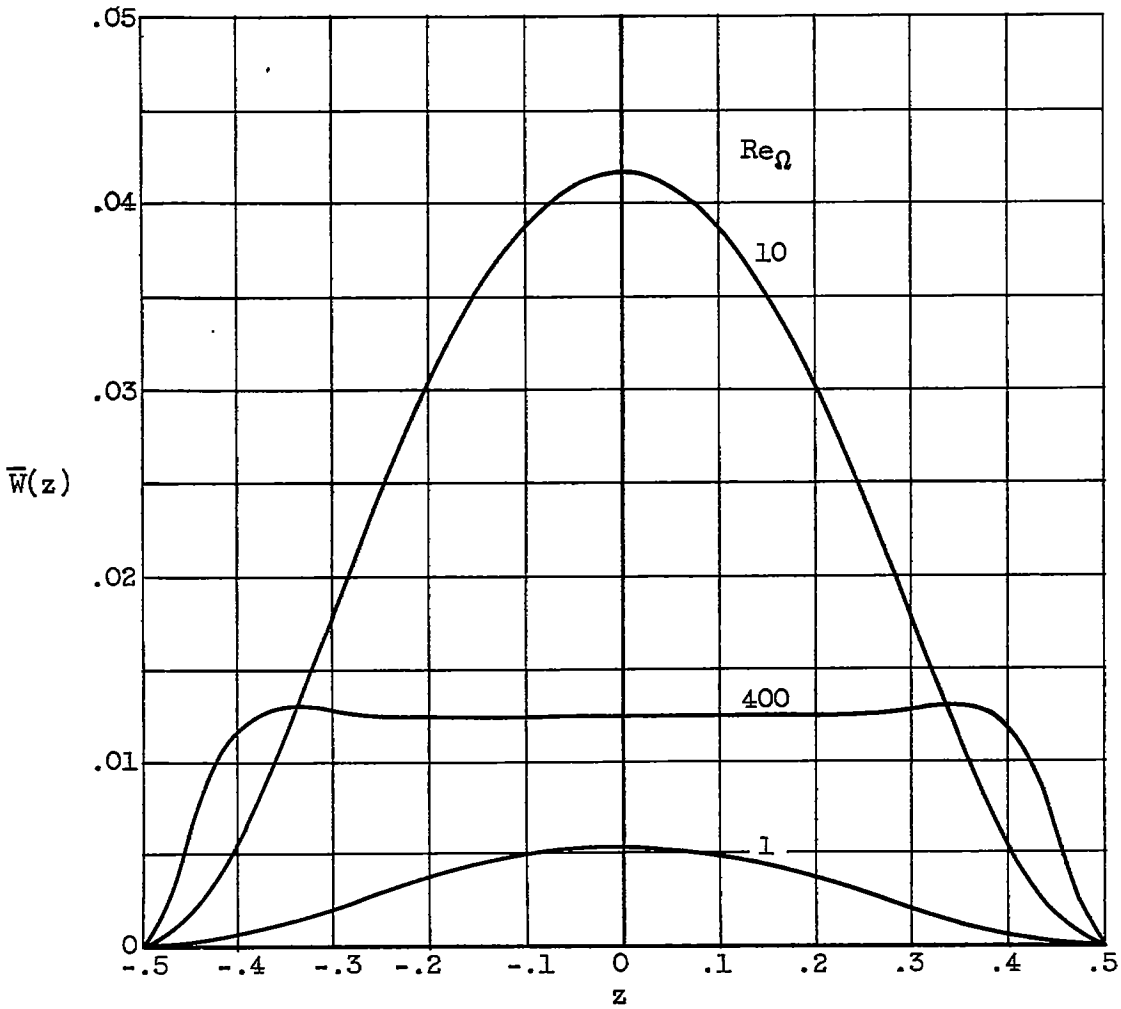

(c) Axial component.

Figure 4. - Concluded. Velocity profiles in rotating cylinder.

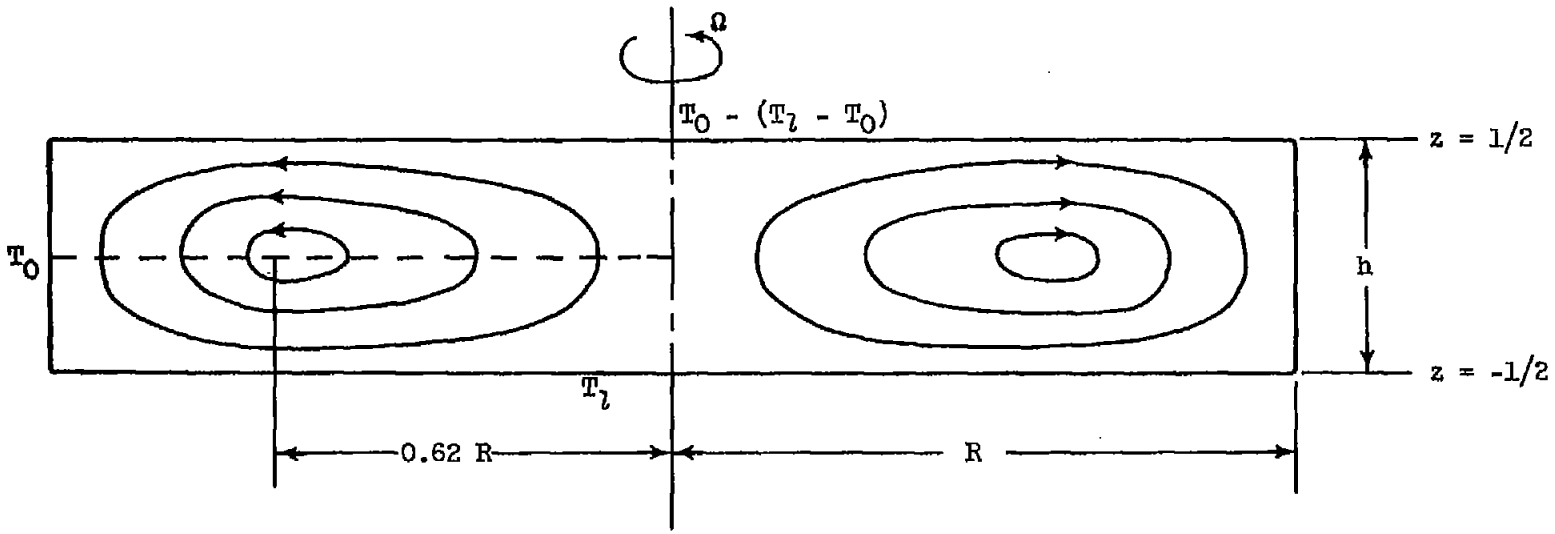

Figure 5. - Coolant flow loop in cylindrical shield.

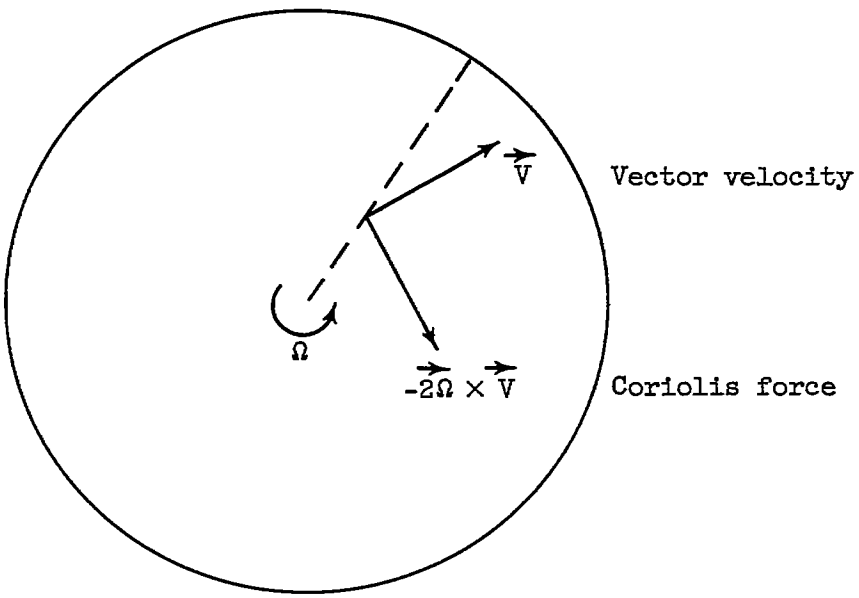

Figure 6. - Coriolis force in upper half of rotating cylinder.