10742
NACA TN 4398

TECH LIBRARY KAFB, NM
0067194

NATIONAL ADVISORY COMMITTEE FOR AERONAUTICS

TECHNICAL NOTE 4398

ANALYSIS OF THE CREEP BEHAVIOR OF A SQUARE PLATE LOADED IN EDGE COMPRESSION

By Harvey G. McComb, Jr.

Langley Aeronautical Laboratory
Langley Field, Va.

Washington
September 1958

AFMDC
TECHNICAL LIBRARY

1J

TECH LIBRARY KAFB, NM

0067194

NATIONAL ADVISORY COMMITTEE FOR AERONAUTICS

TECHNICAL NOTE 4398

ANALYSIS OF THE CREEP BEHAVIOR OF A SQUARE PLATE LOADED IN EDGE COMPRESSION

By Harvey G. McComb, Jr.

SUMMARY

A theoretical analysis is made of a square simply supported plate loaded in edge compression and subject to creep. The plate is assumed to be made of a material which obeys a nonlinear creep law. An approximate solution is carried out with the use of a previously published variational theorem for creep. The theory does not yield a finite collapse time but does indicate how lateral deflections and unit shortening due to creep might be calculated. The results also show that creep can cause significant redistribution of the middle-surface stresses in a plate.

INTRODUCTION

At elevated temperatures, aircraft structural materials may exhibit the phenomenon of creep (deformation with time at constant load). The need for aircraft to operate in an elevated temperature environment, therefore, has increased the importance of considering creep in their structural design. As a result, interest has been stimulated in the creep behavior of such structural components as plates subjected to in-plane edge loads.

Some experimental and theoretical work has been published on rectangular plates subject to creep. In reference 1 results of creep tests and an empirical method for predicting collapse times are presented for plates loaded in compression on two opposite edges and with the remaining edges unloaded and supported in V-groove fixtures. Other approximate methods for handling plates having various types of edge support are suggested in reference 2; however, experimental verification for these methods is quite limited.

In reference 3 an analysis based on small-deflection theory is made of the creep deflection of a simply supported plate composed of a linear

viscoelastic material - that is, a material in which the stress and strain and their appropriate time derivatives are related in a linear fashion. Unfortunately, most structural materials do not exhibit the properties of linear viscoelasticity. The creep relation is usually nonlinear; for example, it is sometimes expressed by a power relationship between strain rate and stress.

A variational theorem given in reference 4 provides a way of overcoming some of the difficulties caused by the nonlinear creep law. This theorem facilitates approximate analyses for plates of nonlinear materials by the direct methods of the calculus of variations. One such analysis utilizing this variational theorem is presented in reference 5 for a sandwich plate. A solution is given in the present paper for a square simply supported solid plate loaded in compression along two opposite edges. In this investigation all edges of the plate are required to remain straight and in the original plane as the plate deflects.

SYMBOLS

b	width or length of square plate
b_e	effective width of plate
E	Young's modulus
e	unit shortening of plate
$\bar{e} = \frac{e}{e_{cr}}$	
e_{cr}	unit shortening at elastic buckling load, $\left(\frac{\pi h}{b}\right)^2 \frac{1}{3\left(1 - \mu^2\right)}$
F	function of J_2 and t (see eq. (10))
f	unit displacement of plate side edges
h	thickness of plate
I	denotes various integrals defined in equations (25)

J_2	second invariant of stress deviation tensor, $\frac{1}{2} s_{ij}s_{ij}$
k	constant in creep law (see eq. (11))
n	exponent in creep law (see eq. (11))
P	total compressive load on plate, positive in compression
$\overline{P} = \frac{P}{P_{cr}}$	
$P_{cr} = \sigma_{cr}bh$	
S	area of a surface
S_u	surface where displacement rates are prescribed
S_σ	surface where stress rates are prescribed
s_{ij}	stress deviation tensor, $\sigma_{ij} - \frac{1}{3} \sigma_{kk}\delta_{ij}$
T_i	surface traction
$\overline{T}_i$	prescribed surface traction
t	time
u,v,w	displacements of the middle surface in x-, y-, and z-directions, respectively
u_i	displacement vector
$u_{10}, u_{11}, v_{01}, v_{11}, w_{11}$	arbitrary coefficients in equations (19)
V	volume
$W = \frac{w_{11}b}{h}$	
$W_i = \frac{w_{11i}b}{h}$	
w_{11i}	amplitude coefficient of initial imperfection of plate (see eq. (A4))

x,y,z	plate coordinates
x_i	plate coordinates in tensor notation
$\gamma_{xy},\gamma_{xz},\gamma_{yz}$	shear strains in xy-, xz-, and yz-directions, respectively
δ_{ij}	Kronecker delta
ϵ_{ij}	strain tensor
ϵ'_{ij}	noncreep portion of strain tensor
ϵ''_{ij}	creep strain tensor
$\epsilon_x,\epsilon_y,\epsilon_z$	strains in x-, y-, and z-directions, respectively
$\epsilon_{xy} = \frac{\gamma_{xy}}{2}$	
$\epsilon_{xz} = \frac{\gamma_{xz}}{2}$	
$\epsilon_{yz} = \frac{\gamma_{yz}}{2}$	
ξ,η,ζ	dimensionless coordinates; $\frac{\pi x}{b}$, $\frac{\pi y}{b}$, $\frac{z}{h}$, respectively
λ	constant in creep law (see eq. (11))
μ	Poisson's ratio
Π	quantity to be varied in a variational theorem
Π_R	quantity to be varied in Reissner's variational theorem
σ_{cr}	elastic buckling stress for square plate, $E\left(\frac{\pi h}{b}\right)^2 \frac{1}{3(1 - \mu^2)}$

σ_{ij}	stress tensor
σ_x, σ_y	stress in x- and y-directions, respectively, positive in tension
$\sigma_{x00}, \sigma_{x10}, \sigma_{x01}, \sigma_{x11}, \sigma_{xb}, \sigma_{y00}, \sigma_{y10}, \sigma_{y01}, \sigma_{y11}, \sigma_{yb}, \tau_{xy11}, \tau_{xyb}$	arbitrary coefficients in equations (20)
τ	time parameter, $\dfrac{\lambda E \sigma_{cr}{}^{2n} t^k}{3^n}$
τ_{xy}	shear stress in planes parallel to xy-plane
Φ, Ψ, Θ	quantities defined in equations (22)

Bar denotes a dimensionless quantity.

Dot denotes differentiation with respect to time.

Repeated letter subscript denotes summation over 1, 2, 3; for instance, $\dot{u}_i \dot{T}_i = \dot{u}_1 \dot{T}_1 + \dot{u}_2 \dot{T}_2 + \dot{u}_3 \dot{T}_3$.

Comma preceding a subscript denotes partial differentiation with respect to x with that subscript; for instance, $\dot{u}_{k,i} = \dfrac{\partial \dot{u}_k}{\partial x_i}$.

ANALYSIS

Statement of Problem

The plate considered in this investigation is illustrated in figure 1. It is a square flat plate compressed in its plane along the two edges parallel to the y-axis. All edges are assumed to be simply supported and to remain in the original plane of the plate. The loaded edges are assumed to be constrained to remain straight and to be free of tangential stresses; that is, the plate is loaded by means of a pair of rigid frictionless loading platens. The unloaded edges also are assumed to be constrained to remain straight and free of tangential stresses and are free to translate in the plane of the plate. The load application is assumed to be sufficiently rapid so that the creep which

occurs during loading is negligible but sufficiently slow so that dynamic effects also are negligible. After the total load is applied it is assumed to remain constant with time. The history of the lateral deflection, unit shortening, and middle-surface stresses are desired subsequent to load application.

The boundary conditions, which are considered to hold for all time, can be written in mathematical form as follows:

For constant displacement,

$$\frac{\partial u\left(\pm\frac{b}{2},y\right)}{\partial y} = \frac{\partial v\left(x,\pm\frac{b}{2}\right)}{\partial x} = 0 \tag{1}$$

For zero deflection,

$$w\left(\pm\frac{b}{2},y\right) = w\left(x,\pm\frac{b}{2}\right) = 0 \tag{2}$$

For zero moment,

$$\int_{-h/2}^{h/2}\sigma_x\left(\pm\frac{b}{2},y,z\right)z\ dz = \int_{-h/2}^{h/2}\sigma_y\left(x,\pm\frac{b}{2},z\right)z\ dz = 0 \tag{3}$$

For loaded edges,

$$\int_{-h/2}^{h/2}\int_{-b/2}^{b/2}\sigma_x\left(\pm\frac{b}{2},y,z\right)dy\ dz = -P \tag{4}$$

For unloaded edges,

$$\int_{-h/2}^{h/2}\int_{-b/2}^{b/2}\sigma_y\left(x,\pm\frac{b}{2},z\right)dx\ dz = 0 \tag{5}$$

For shear stress,

$$\int_{-h/2}^{h/2}\tau_{xy}\left(\pm\frac{b}{2},y,z\right)dz = \int_{-h/2}^{h/2}\tau_{xy}\left(x,\pm\frac{b}{2},z\right)dz = 0 \tag{6}$$

Variational Theorem

In this analysis the variational theorem presented in reference 4 is utilized. This theorem differs from the usual variational theorems for potential energy and complementary energy in that instead of varying stress and strain the stress rates and strain rates are varied. In this respect the theorem is similar to those presented in reference 6. Furthermore, in the variational theorem of reference 4, stress rates and displacement rates can be approximated independently; in this respect the theorem is similar to that of Reissner in reference 7. The theorem of reference 4 is stated here in general form and subsequently reduced to a form appropriate for the present problem by incorporating strain-displacement relations and a creep law.

General statement of theorem.- The variational theorem of reference 4 is stated as follows: If the stresses and strains are known throughout a body at a given instant of time, then the stress rates and strain rates existing at that instant are given by $\delta\Pi = 0$ where

$$\Pi = \int_V \left[\dot{\epsilon}_{ij}\dot{\sigma}_{ij} + \frac{1}{2}\dot{u}_{k,i}\dot{u}_{k,j}\sigma_{ij} - \frac{1}{2}\left(\dot{\epsilon}'_{ij} + 2\dot{\epsilon}''_{ij}\right)\dot{\sigma}_{ij}\right]dV - \int_{S_\sigma} \dot{\bar{T}}_i\dot{u}_i \, dS - \int_{S_u}\left(\dot{u}_i - \dot{\bar{u}}_i\right)\dot{T}_i \, dS \tag{7}$$

In the first term of the volume integral, $\dot{\epsilon}_{ij}$ is expressed in terms of displacements and displacement rates. In the third term of the volume integral, $\dot{\epsilon}'_{ij}$ is expressed in terms of stresses and stress rates, and $\dot{\epsilon}''_{ij}$ is expressed in terms of stresses and time and is independent of stress rate. The variations are to be carried out only with respect to time derivatives of quantities.

Strain-displacement relations.- It is assumed that lines which are originally normal to the middle surface remain normal during the deflection of the plate. As a consequence, the strain-displacement relations can be written as follows:

$$\epsilon_x = \frac{\partial u}{\partial x} + \frac{1}{2}\left(\frac{\partial w}{\partial x}\right)^2 - z\frac{\partial^2 w}{\partial x^2} \tag{8a}$$

$$\epsilon_y = \frac{\partial v}{\partial y} + \frac{1}{2}\left(\frac{\partial w}{\partial y}\right)^2 - z\,\frac{\partial^2 w}{\partial y^2} \tag{8b}$$

$$2\epsilon_{xy} = \gamma_{xy} = \frac{\partial u}{\partial y} + \frac{\partial v}{\partial x} + \frac{\partial w}{\partial x}\frac{\partial w}{\partial y} - 2z\,\frac{\partial^2 w}{\partial x\,\partial y} \tag{8c}$$

$$\epsilon_z = \gamma_{xz} = \gamma_{yz} = 0 \tag{8d}$$

Equations (8) are the strain-displacement relations consistent with the Von Karman equations for large deflections of plates. The time derivatives of equations (8) are

$$\dot{\epsilon}_x = \frac{\partial \dot{u}}{\partial x} + \frac{\partial w}{\partial x}\frac{\partial \dot{w}}{\partial x} - z\,\frac{\partial^2 \dot{w}}{\partial x^2} \tag{9a}$$

$$\dot{\epsilon}_y = \frac{\partial \dot{v}}{\partial y} + \frac{\partial w}{\partial y}\frac{\partial \dot{w}}{\partial y} - z\,\frac{\partial^2 \dot{w}}{\partial y^2} \tag{9b}$$

$$\dot{\gamma}_{xy} = \frac{\partial \dot{u}}{\partial y} + \frac{\partial \dot{v}}{\partial x} + \frac{\partial w}{\partial x}\frac{\partial \dot{w}}{\partial y} + \frac{\partial \dot{w}}{\partial x}\frac{\partial w}{\partial y} - 2z\,\frac{\partial^2 \dot{w}}{\partial x\,\partial y} \tag{9c}$$

$$\dot{\epsilon}_z = \dot{\gamma}_{xz} = \dot{\gamma}_{yz} = 0 \tag{9d}$$

Creep law.- In the formulation of the variational theorem, it is assumed that the total strain can be separated into an elastic-plastic part ϵ'_{ij} and a creep part ϵ''_{ij}. Plastic strains are neglected in the present investigation; thus, ϵ'_{ij} is given in terms of stress by Hooke's law. The functional relation between the creep rate tensor and the stress tensor and time may be assumed as follows:

$$\dot{\epsilon}''_{ij} = F\left(J_2, t\right) s_{ij} \tag{10}$$

where s_{ij} is the stress deviation tensor and is related to the stress tensor by

$$s_{ij} = \sigma_{ij} - \frac{1}{3}\sigma_{kk}\delta_{ij}$$

Equation (10) reflects the fact that creep strains appear to be independent of hydrostatic stress. The form of F is taken to be

$$F = \lambda J_2{}^n kt^{k-1} \tag{11}$$

where λ, n, and k are material constants. The symbol J_2 represents the second invariant of the stress deviation tensor and is given by $J_2 = \frac{1}{2} s_{ij}s_{ij}$. The power function of J_2 is suggested in references 8 and 9 where some experimental support is presented for it. The power function of time provides an approximate way to account for primary creep.

Equation (10), of course, applies to three-dimensional creep problems. A two-dimensional form applicable to plates can be obtained when

$$\sigma_{33} \equiv \sigma_z = 0$$

and

$$\sigma_{13} \equiv \tau_{xz} = \sigma_{23} \equiv \tau_{yz} = 0$$

and it is written as follows in engineering notation:

$$\left.\begin{aligned}
\dot{\epsilon}''_{11} \equiv \dot{\epsilon}''_x &= \frac{\lambda}{3}\frac{\left(\sigma_x{}^2 + \sigma_y{}^2 - \sigma_x\sigma_y + 3\tau_{xy}{}^2\right)^n}{3^n}(2\sigma_x - \sigma_y)kt^{k-1} \\
\dot{\epsilon}''_{22} \equiv \dot{\epsilon}''_y &= \frac{\lambda}{3}\frac{\left(\sigma_x{}^2 + \sigma_y{}^2 - \sigma_x\sigma_y + 3\tau_{xy}{}^2\right)^n}{3^n}(2\sigma_y - \sigma_x)kt^{k-1} \\
2\dot{\epsilon}''_{12} \equiv \dot{\gamma}''_{xy} &= \frac{\lambda}{3}\frac{\left(\sigma_x{}^2 + \sigma_y{}^2 - \sigma_x\sigma_y + 3\tau_{xy}{}^2\right)^n}{3^n}(2\tau_{xy})kt^{k-1}
\end{aligned}\right\} \tag{12}$$

In the one-dimensional case the additional stresses $\sigma_{22} \equiv \sigma_y$ and $\tau_{12} \equiv \tau_{xy}$ may be set equal to zero, and the following equation results:

$$\dot{\epsilon}_x'' = \frac{2}{3} \lambda \frac{\sigma_x^{2n+1}}{3^n} kt^{k-1} \tag{13}$$

Form of theorem appropriate for present problem.- With the use of the strain-displacement relations and the creep law presented in the previous sections, the variational theorem can be reduced to a form appropriate for the problem under consideration. When equations (9) are used, the first term in the volume integral of the equation for Π (eq. (7)) becomes

$$\dot{\epsilon}_{ij}\dot{\sigma}_{ij} = \left(\frac{\partial \dot{u}}{\partial x} + \frac{\partial w}{\partial x}\frac{\partial \dot{w}}{\partial x} - z\frac{\partial^2 \dot{w}}{\partial x^2}\right)\dot{\sigma}_x + \left(\frac{\partial \dot{v}}{\partial y} + \frac{\partial w}{\partial y}\frac{\partial \dot{w}}{\partial y} - z\frac{\partial^2 \dot{w}}{\partial y^2}\right)\dot{\sigma}_y + \left(\frac{\partial \dot{u}}{\partial y} + \frac{\partial \dot{v}}{\partial x} + \frac{\partial w}{\partial x}\frac{\partial \dot{w}}{\partial y} + \frac{\partial \dot{w}}{\partial x}\frac{\partial w}{\partial y} - 2z\frac{\partial^2 \dot{w}}{\partial x\,\partial y}\right)\dot{\tau}_{xy} \tag{14}$$

Notice that to obtain equation (14) the fact that $\tau_{xy} = \tau_{yx}$ is used. The second term of the volume integral in equation (7) yields the following expression when certain terms are neglected to be consistent with equations (8):

$$\frac{1}{2}\dot{u}_{k,i}\dot{u}_{k,j}\sigma_{ij} = \frac{1}{2}\left[\left(\frac{\partial \dot{w}}{\partial x}\right)^2\sigma_x + \left(\frac{\partial \dot{w}}{\partial y}\right)^2\sigma_y + 2\frac{\partial \dot{w}}{\partial x}\frac{\partial \dot{w}}{\partial y}\tau_{xy}\right] \tag{15}$$

The third term of the volume integral becomes:

$$\frac{1}{2}\dot{\epsilon}_{ij}'\dot{\sigma}_{ij} = \frac{1}{2E}\left(\dot{\sigma}_x^{\,2} + \dot{\sigma}_y^{\,2}\right) - \frac{\mu}{E}\dot{\sigma}_x\dot{\sigma}_y + \frac{1+\mu}{E}\dot{\tau}_{xy}^{\,2} \tag{16}$$

The final term in the volume integral, the creep term, becomes:

$$\dot{\epsilon}_{ij}''\dot{\sigma}_{ij} = \frac{1}{3}F\left(J_2,t\right)\left[(2\sigma_x - \sigma_y)\dot{\sigma}_x + (2\sigma_y - \sigma_x)\dot{\sigma}_y + 6\tau_{xy}\dot{\tau}_{xy}\right] \tag{17}$$

when equation (10) is utilized to express $\dot{\epsilon}''_{ij}$ in terms of stress and time.

The two surface integrals in the equation for Π (eq. (7)) remain to be considered. Displacement rates are not prescribed anywhere on the boundaries of the plate. The surface integral over S_u, therefore, may be discarded. The other surface integral, the one over S_σ, must be modified to account for the loading condition and the requirement of straight edges. The correct modification is to replace the surface integral over S_σ by the term $\dot{P}\dot{e}b$ where P represents the total load on the plate and e represents the plate unit shortening.

When equations (14) to (17) are substituted into the equation for Π (eq. (7)) and the correct modification of the surface integral over S_σ is used, the following expression appropriate for the problem under consideration results:

$$\Pi = \int_{-h/2}^{h/2}\int_{-b/2}^{b/2}\int_{-b/2}^{b/2}\left\{\left(\frac{\partial\dot{u}}{\partial x} + \frac{\partial w}{\partial x}\frac{\partial\dot{w}}{\partial x} - z\frac{\partial^2\dot{w}}{\partial x^2}\right)\dot{\sigma}_x + \left(\frac{\partial\dot{v}}{\partial y} + \frac{\partial w}{\partial y}\frac{\partial\dot{w}}{\partial y} - z\frac{\partial^2\dot{w}}{\partial y^2}\right)\dot{\sigma}_y + \right.$$

$$\left(\frac{\partial\dot{u}}{\partial y} + \frac{\partial\dot{v}}{\partial x} + \frac{\partial w}{\partial x}\frac{\partial\dot{w}}{\partial y} + \frac{\partial\dot{w}}{\partial x}\frac{\partial w}{\partial y} - 2z\frac{\partial^2\dot{w}}{\partial x\,\partial y}\right)\dot{\tau}_{xy} + \frac{1}{2}\left[\left(\frac{\partial\dot{w}}{\partial x}\right)^2\sigma_x + \left(\frac{\partial\dot{w}}{\partial y}\right)^2\sigma_y\right] +$$

$$\frac{\partial\dot{w}}{\partial x}\frac{\partial\dot{w}}{\partial y}\tau_{xy} - \frac{1}{2E}\left(\dot{\sigma}_x{}^2 + \dot{\sigma}_y{}^2\right) + \frac{\mu}{E}\dot{\sigma}_x\dot{\sigma}_y - \frac{1+\mu}{E}\dot{\tau}_{xy}{}^2 -$$

$$\left.\frac{1}{3}F\left[\left(2\sigma_x - \sigma_y\right)\dot{\sigma}_x + \left(2\sigma_y - \sigma_x\right)\dot{\sigma}_y + 6\tau_{xy}\dot{\tau}_{xy}\right]\right\}dx\,dy\,dz - \dot{P}\dot{e}b \qquad (18)$$

Method of Solution

A Rayleigh-Ritz type procedure can be used in conjunction with equation (18) to obtain an approximate solution to this problem. Reasonable assumptions are made for the stresses, displacements, stress rates, and displacement rates in the plate. These assumed distributions contain certain arbitrary parameters and the time rates of change of these arbitrary parameters. When the assumed distributions are substituted into the expression for Π, integrations over the volume of the plate can be carried out. Then a system of equations is obtained by equating to zero

the variation of the resulting expression for Π with respect to variations in the time rates of change of the arbitrary parameters. These equations are, in general, nonlinear ordinary differential equations of the first order with time as the independent variable. Numerical methods are available for the solution of such systems when appropriate initial conditions are known.

Derivation of Differential Equations

Assumed stress rates and displacement rates.- The boundary conditions considered in this report are the same as those of reference 10. Therefore, the displacement functions assumed in reference 10 are used as a guide in choosing the displacement-rate and stress-rate distributions. The middle-surface displacement rates are assumed to be the time derivatives of the displacements of reference 10:

$$\left.\begin{aligned}
\dot{u} &= -\dot{e}x + b\left(\dot{u}_{10} + \dot{u}_{11}\cos\frac{2\pi y}{b}\right)\sin\frac{2\pi x}{b} \\
\dot{v} &= \dot{f}y + b\left(\dot{v}_{01} + \dot{v}_{11}\cos\frac{2\pi x}{b}\right)\sin\frac{2\pi y}{b} \\
\dot{w} &= b\dot{w}_{11}\cos\frac{\pi x}{b}\cos\frac{\pi y}{b}
\end{aligned}\right\} \tag{19}$$

In choosing appropriate stress-rate distributions, some assumption must be made regarding the variation of stress through the thickness of the plate. As pointed out in reference 4, this variation is not necessarily linear even though the strain variation is assumed linear through the thickness. Calculations of creep of columns, however, suggest that in certain cases the nonlinearity of the stress distribution may not seriously influence the lateral deflection and unit shortening. On this basis, it is assumed that a linear variation of stress rate with z is a sufficiently accurate first approximation for plates, and the stress rates are taken as follows:

$$\left.\begin{aligned}
\dot{\sigma}_x &= \dot{\sigma}_{x00} + \dot{\sigma}_{x10}\cos\frac{2\pi x}{b} + \dot{\sigma}_{x01}\cos\frac{2\pi y}{b} + \dot{\sigma}_{x11}\cos\frac{2\pi x}{b}\cos\frac{2\pi y}{b} + \dot{\sigma}_{xb}\frac{2z}{h}\cos\frac{\pi x}{b}\cos\frac{\pi y}{b} \\
\dot{\sigma}_y &= \dot{\sigma}_{y00} + \dot{\sigma}_{y10}\cos\frac{2\pi x}{b} + \dot{\sigma}_{y01}\cos\frac{2\pi y}{b} + \dot{\sigma}_{y11}\cos\frac{2\pi x}{b}\cos\frac{2\pi y}{b} + \dot{\sigma}_{yb}\frac{2z}{h}\cos\frac{\pi x}{b}\cos\frac{\pi y}{b} \\
\dot{\tau}_{xy} &= \dot{\tau}_{xy11}\sin\frac{2\pi x}{b}\sin\frac{2\pi y}{b} + \dot{\tau}_{xyb}\frac{2z}{h}\sin\frac{\pi x}{b}\sin\frac{\pi y}{b}
\end{aligned}\right\} \tag{20}$$

The displacement rates (eqs. (19)) and the stress rates (eqs. (20)) satisfy the time derivatives of the boundary conditions given by equations (1) to (6). It is in these assumptions for the stress rates and displacement rates that this investigation differs from that of reference 5. In reference 5 the simplified assumptions are made that the stresses are related to the lateral deflection in the same manner as that of the elastic buckling of a plate under compression in one direction. This procedure allows all the unknown coefficients to be written in terms of w_{11}, the lateral deflection coefficient. The variation of Π, then, leads to a single differential equation in w_{11} instead of the system of simultaneous differential equations in $w_{11}, u_{10}, u_{11}, \ldots, \sigma_{x00}, \sigma_{x10}, \ldots$ which result from the present analysis.

Variation of Π.- When equations (19) and (20) are substituted into equation (18) and certain of the integrations are carried out, the following expression results:

$$
\begin{aligned}
\Pi = b^2h \Bigg\{ & -\dot{e}\dot{\sigma}_{x00} + \dot{f}\dot{\sigma}_{y00} + \pi\left(\dot{u}_{10}\dot{\sigma}_{x10} + \dot{v}_{01}\dot{\sigma}_{y01} + \frac{\dot{u}_{11}}{2}\dot{\sigma}_{x11} + \frac{\dot{v}_{11}}{2}\dot{\sigma}_{y11} - \frac{\dot{u}_{11} + \dot{v}_{11}}{2}\dot{\tau}_{xy11}\right) + \frac{\pi^2}{4} w_{11}\dot{w}_{11}\Big(\dot{\sigma}_{x00} + \dot{\sigma}_{y00} - \\
& \frac{\dot{\sigma}_{x10} - \dot{\sigma}_{y10}}{2} + \frac{\dot{\sigma}_{x01} - \dot{\sigma}_{y01}}{2} - \frac{\dot{\sigma}_{x11} + \dot{\sigma}_{y11}}{4} + \frac{\dot{\tau}_{xy11}}{2}\Big) + \frac{\pi^2}{24}\frac{h}{b}\dot{w}_{11}\left(\dot{\sigma}_{xb} + \dot{\sigma}_{yb} - 2\dot{\tau}_{xyb}\right) + \frac{\pi^2}{8}\dot{w}_{11}^2\Big(\sigma_{x00} + \sigma_{y00} - \\
& \frac{\sigma_{x10} - \sigma_{y10}}{2} + \frac{\sigma_{x01} - \sigma_{y01}}{2} - \frac{\sigma_{x11} + \sigma_{y11}}{4} + \frac{\tau_{xy11}}{2}\Big) - \frac{1}{2E}\Big(\dot{\sigma}_{x00}^2 + \dot{\sigma}_{y00}^2 + \frac{\dot{\sigma}_{x10}^2 + \dot{\sigma}_{y10}^2}{2} + \frac{\dot{\sigma}_{x01}^2 + \dot{\sigma}_{y01}^2}{2} + \\
& \frac{\dot{\sigma}_{x11}^2 + \dot{\sigma}_{y11}^2}{4} + \frac{\dot{\sigma}_{xb}^2 + \dot{\sigma}_{yb}^2}{12}\Big) + \frac{\mu}{E}\Big(\dot{\sigma}_{x00}\dot{\sigma}_{y00} + \frac{\dot{\sigma}_{x10}\dot{\sigma}_{y10}}{2} + \frac{\dot{\sigma}_{x01}\dot{\sigma}_{y01}}{2} + \frac{\dot{\sigma}_{x11}\dot{\sigma}_{y11}}{4} + \frac{\dot{\sigma}_{xb}\dot{\sigma}_{yb}}{12}\Big) - \\
& \frac{1 + \mu}{E}\Big(\frac{\dot{\tau}_{xy11}^2}{4} + \frac{\dot{\tau}_{xyb}^2}{12}\Big) - \frac{1}{3\pi^2}\int_{-1/2}^{1/2}\int_{-\pi/2}^{\pi/2}\int_{-\pi/2}^{\pi/2} F\left(J_2, t\right)\Big[\Phi\Big(\dot{\sigma}_{x00} + \dot{\sigma}_{x10}\cos 2\xi + \dot{\sigma}_{x01}\cos 2\eta + \\
& \dot{\sigma}_{x11}\cos 2\xi\cos 2\eta + \dot{\sigma}_{xb}2\zeta\cos\xi\cos\eta\Big) + \Psi\Big(\dot{\sigma}_{y00} + \dot{\sigma}_{y10}\cos 2\xi + \dot{\sigma}_{y01}\cos 2\eta + \dot{\sigma}_{y11}\cos 2\xi\cos 2\eta + \\
& \dot{\sigma}_{yb}2\zeta\cos\xi\cos\eta\Big) + 6\Theta\Big(\dot{\tau}_{xy11}\sin 2\xi\sin 2\eta + \dot{\tau}_{xyb}2\zeta\sin\xi\sin\eta\Big)\Big]d\xi\, d\eta\, d\zeta \Bigg\} - \dot{P}\dot{e}b
\end{aligned}
\tag{21}
$$

The symbols ξ, η, and ζ represent the dimensionless variables in the x-, y-, and z-directions, and the functions Φ, Ψ, and Θ are given as follows:

$$\left.\begin{aligned}
\Phi &= 2\sigma_{x00} - \sigma_{y00} + \left(2\sigma_{x10} - \sigma_{y10}\right)\cos 2\xi + \left(2\sigma_{x01} - \sigma_{y01}\right)\cos 2\eta + \\
&\qquad \left(2\sigma_{x11} - \sigma_{y11}\right)\cos 2\xi \cos 2\eta + \left(2\sigma_{xb} - \sigma_{yb}\right)2\zeta \cos \xi \cos \eta \\
\Psi &= 2\sigma_{y00} - \sigma_{x00} + \left(2\sigma_{y10} - \sigma_{x10}\right)\cos 2\xi + \left(2\sigma_{y01} - \sigma_{x01}\right)\cos 2\eta + \\
&\qquad \left(2\sigma_{y11} - \sigma_{x11}\right)\cos 2\xi \cos 2\eta + \left(2\sigma_{yb} - \sigma_{xb}\right)2\zeta \cos \xi \cos \eta \\
\Theta &= \tau_{xy11} \sin 2\xi \sin 2\eta + \tau_{xyb}2\zeta \sin \xi \sin \eta
\end{aligned}\right\} \tag{22}$$

The conditions which the time derivatives of the coefficients must satisfy are:

$$\begin{aligned}
&\frac{\partial\Pi}{\partial\dot{\sigma}_{x00}} = \frac{\partial\Pi}{\partial\dot{\sigma}_{x10}} = \frac{\partial\Pi}{\partial\dot{\sigma}_{x01}} = \frac{\partial\Pi}{\partial\dot{\sigma}_{x11}} = \frac{\partial\Pi}{\partial\dot{\sigma}_{xb}} = \frac{\partial\Pi}{\partial\dot{\sigma}_{y00}} = \frac{\partial\Pi}{\partial\dot{\sigma}_{y10}} = \frac{\partial\Pi}{\partial\dot{\sigma}_{y01}} = \frac{\partial\Pi}{\partial\dot{\sigma}_{y11}} \\
&\qquad = \frac{\partial\Pi}{\partial\dot{\sigma}_{yb}} = \frac{\partial\Pi}{\partial\dot{\tau}_{xy11}} = \frac{\partial\Pi}{\partial\dot{\tau}_{xyb}} = \frac{\partial\Pi}{\partial\dot{e}} = \frac{\partial\Pi}{\partial\dot{u}_{10}} = \frac{\partial\Pi}{\partial\dot{u}_{11}} = \frac{\partial\Pi}{\partial\dot{f}} = \frac{\partial\Pi}{\partial\dot{v}_{01}} = \frac{\partial\Pi}{\partial\dot{v}_{11}} \\
&\qquad = \frac{\partial\Pi}{\partial\dot{w}_{11}} = 0
\end{aligned} \tag{23}$$

When the operations indicated in equations (23) are performed, the following system of 19 ordinary differential equations is obtained:

$$-\dot{e} + \frac{\pi^2}{4} w_{11}\dot{w}_{11} - I_{x00} = 0 \tag{24a}$$

$$\pi\dot{u}_{10} - \frac{\pi^2}{8} w_{11}\dot{w}_{11} + \frac{\mu\dot{\sigma}_{y10}}{2E} - I_{x10} = 0 \tag{24b}$$

$$\frac{\pi^2}{8} w_{11}\dot{w}_{11} - \frac{\dot{\sigma}_{x01}}{2E} - I_{x01} = 0 \tag{24c}$$

$$\frac{\pi}{2}\dot{u}_{11} - \frac{\pi^2}{16}w_{11}\dot{w}_{11} - \frac{\dot{\sigma}_{x11}}{4E} + \frac{\mu\dot{\sigma}_{y11}}{4E} - I_{x11} = 0 \tag{24d}$$

$$\frac{\pi^2}{24}\frac{h}{b}\dot{w}_{11} - \frac{\dot{\sigma}_{xb}}{12E} + \frac{\mu\dot{\sigma}_{yb}}{12E} - I_{xb} = 0 \tag{24e}$$

$$\dot{f} + \frac{\pi^2}{4}w_{11}\dot{w}_{11} - I_{y00} = 0 \tag{24f}$$

$$\frac{\pi^2}{8}w_{11}\dot{w}_{11} - \frac{\dot{\sigma}_{y10}}{2E} - I_{y10} = 0 \tag{24g}$$

$$\pi\dot{v}_{01} - \frac{\pi^2}{8}w_{11}\dot{w}_{11} + \frac{\mu\dot{\sigma}_{x01}}{2E} - I_{y01} = 0 \tag{24h}$$

$$\frac{\pi}{2}\dot{v}_{11} - \frac{\pi^2}{16}w_{11}\dot{w}_{11} - \frac{\dot{\sigma}_{y11}}{4E} + \frac{\mu\dot{\sigma}_{x11}}{4E} - I_{y11} = 0 \tag{24i}$$

$$\frac{\pi^2}{24}\frac{h}{b}\dot{w}_{11} - \frac{\dot{\sigma}_{yb}}{12E} + \frac{\mu\dot{\sigma}_{xb}}{12E} - I_{yb} = 0 \tag{24j}$$

$$-\frac{\pi}{2}\left(\dot{u}_{11} + \dot{v}_{11}\right) + \frac{\pi^2}{8}w_{11}\dot{w}_{11} - \frac{1+\mu}{2E}\dot{\tau}_{xy11} - I_{xy11} = 0 \tag{24k}$$

$$\frac{\pi^2}{12}\frac{h}{b}\dot{w}_{11} + \frac{1+\mu}{6E}\dot{\tau}_{xyb} + I_{xyb} = 0 \tag{24l}$$

$$\dot{\sigma}_{x11} = \dot{\sigma}_{y11} = \dot{\tau}_{xy11} \tag{24m}$$

$$hb\dot{\sigma}_{x00} = -\dot{P} \tag{24n}$$

$$\dot{\sigma}_{y00} = \dot{\sigma}_{x10} = \dot{\sigma}_{y01} = 0 \tag{24o}$$

$$\frac{w_{11}}{2}\left(\dot{\sigma}_{x01} - \frac{\dot{\sigma}_{x11}}{2} + \dot{\sigma}_{y10} - \frac{\dot{\sigma}_{y11}}{2} + \dot{\tau}_{xy11}\right) + \dot{w}_{11}\left(\sigma_{x00} + \frac{\sigma_{x01}}{2} - \frac{\sigma_{x11}}{4} + \frac{\sigma_{y10}}{2} - \frac{\sigma_{y11}}{4} + \frac{\tau_{xy11}}{2}\right) + \frac{1}{6}\frac{h}{b}\left(\dot{\sigma}_{xb} + \dot{\sigma}_{yb} - 2\dot{\tau}_{xyb}\right) = 0 \tag{24p}$$

The integrals I in equations (24) are for various combinations of the stress parameters and are defined as follows (note that these eqs. do not contain any rates):

$$\left.\begin{aligned}
I_{x00} &= \frac{1}{3\pi^2}\int_V F\Phi\, dV & I_{y00} &= \frac{1}{3\pi^2}\int_V F\Psi\, dV \\
I_{x10} &= \frac{1}{3\pi^2}\int_V F\Phi \cos 2\xi\, dV & I_{y10} &= \frac{1}{3\pi^2}\int_V F\Psi \cos 2\xi\, dV \\
I_{x01} &= \frac{1}{3\pi^2}\int_V F\Phi \cos 2\eta\, dV & I_{y01} &= \frac{1}{3\pi^2}\int_V F\Psi \cos 2\eta\, dV \\
I_{x11} &= \frac{1}{3\pi^2}\int_V F\Phi \cos 2\xi \cos 2\eta\, dV & I_{y11} &= \frac{1}{3\pi^2}\int_V F\Psi \cos 2\xi \cos 2\eta\, dV \\
I_{xb} &= \frac{1}{3\pi^2}\int_V F\Phi 2\zeta \cos \xi \cos \eta\, dV & I_{yb} &= \frac{1}{3\pi^2}\int_V F\Psi 2\zeta \cos \xi \cos \eta\, dV \\
I_{xy11} &= \frac{1}{3\pi^2}\int_V 6F\Theta \sin 2\xi \sin 2\eta\, dV & I_{xyb} &= \frac{1}{3\pi^2}\int_V 12F\Theta\zeta \sin \xi \sin \eta\, dV
\end{aligned}\right\} \tag{25}$$

where $dV = d\xi\, d\eta\, d\zeta$, and the integration is to be performed throughout the volume of the plate - that is, over ζ from $-1/2$ to $1/2$ and over ξ and η from $-\pi/2$ to $\pi/2$.

The system of equations (eqs. (24)) contains all the unknown coefficients in the stress-rate and displacement-rate distributions. These

equations conceivably can be solved for all these coefficients. In this investigation, however, equations (24b), (24f), and (24h) are not used since the desired information on lateral deflection, unit shortening, and stress distribution can be obtained without them.

In order to start the numerical solution, the initial conditions or the conditions at time zero just subsequent to loading and before creep has commenced are required. These conditions are discussed briefly in the next section.

Initial Conditions

Because of the nature of the load-application process assumed in this investigation, the initial conditions for the creep solution - that is, the conditions just subsequent to loading and before creep commences - can be obtained from a solution of the problem in which creep is neglected. If the applied load is below the elastic buckling load of the plate, it is necessary to take into account an initial imperfection of the plate in order to initiate lateral deflection due to creep. If the applied load is above the elastic buckling load, it may be possible to disregard initial imperfections. In this report, however, an initial imperfection is assumed to exist in either case.

The initial conditions are derived in appendix A. The results of the derivation are contained in equations (A7n) and (A8) to (A11).

Preparation for Numerical Solution of Equations

Simplification of differential equations.- Certain of equations (24) are now solved to obtain $\dot{w}_{11}$ and the stress-rate coefficients in terms of the stress coefficients. Equations (24c) and (24g) yield

$$\left.\begin{aligned} \dot{\sigma}_{x01} &= E\left(\frac{\pi^2}{4} w_{11}\dot{w}_{11} - 2I_{x01}\right) \\ \dot{\sigma}_{y10} &= E\left(\frac{\pi^2}{4} w_{11}\dot{w}_{11} - 2I_{y10}\right) \end{aligned}\right\} \tag{26}$$

From equations (24e) and (24j)

$$\left.\begin{aligned}\dot{\sigma}_{xb} &= \frac{E\pi^2}{2(1-\mu)}\frac{h}{b}\dot{w}_{11} - \frac{12E}{1-\mu^2}\left(I_{xb} + \mu I_{yb}\right)\\ \dot{\sigma}_{yb} &= \frac{E\pi^2}{2(1-\mu)}\frac{h}{b}\dot{w}_{11} - \frac{12E}{1-\mu^2}\left(I_{yb} + \mu I_{xb}\right)\end{aligned}\right\} \tag{27}$$

From equation (24l)

$$\dot{\tau}_{xyb} = -\frac{E}{1+\mu}\left(\frac{\pi^2}{2}\frac{h}{b}\dot{w}_{11} + 6I_{xyb}\right) \tag{28}$$

The initial conditions give $\sigma_{x11} = \sigma_{y11} = \tau_{xy11}$ at time zero (see eq. (A7n)), and equation (24m) states that $\dot{\sigma}_{x11} = \dot{\sigma}_{y11} = \dot{\tau}_{xy11}$. Consequently,

$$\sigma_{x11} \equiv \sigma_{y11} \equiv \tau_{xy11} \tag{29}$$

for all time. When equations (29) are considered, equations (24d), (24i), and (24k) can be solved to obtain:

$$\dot{\tau}_{xy11} = -E\left(I_{x11} + I_{y11} + I_{xy11}\right) \tag{30}$$

Equations (26), (27), (28), and (30) are now used in equation (24p) to find $\dot{w}_{11}$. The result is:

$$\dot{w}_{11} = \frac{w_{11}\left(I_{x01} + I_{y10}\right) + 2\frac{h}{b}\left[\frac{1}{1-\mu}\left(I_{xb} + I_{yb}\right) - \frac{1}{1+\mu}I_{xyb}\right]}{\frac{\pi^2}{4}w_{11}^{\,2} + \frac{\sigma_{x00}}{E} + \frac{\sigma_{x01} + \sigma_{y10}}{2E} + \frac{\sigma_{cr}}{E}} \tag{31}$$

The history of lateral deflection and stress distribution can be obtained by solving simultaneously equations (31), (26), (27), (28),

and (30). Unit shortening may be obtained by utilizing equation (24a). The initial conditions are given in appendix A. The solution of this system requires considerable numerical calculation since, in general, the required integrals (eqs. (25)) have to be evaluated numerically. For two cases, however, it is feasible to carry out the integrations of equations (25) analytically; thus the calculation is simplified. These two cases, represented by $n = 0$ and $n = 1$ in the creep law (see eq. (11)), are considered in this report. The case of $n = 0$ is equivalent to a material having an exponent of one in the uniaxial power creep law, that is a linear viscoelastic material, and is comparable to the solution in reference 3. The case of $n = 1$ is equivalent to an exponent of 3 in the uniaxial power creep law and, of course, represents a nonlinear material.

Dimensionless form of equations.- It is convenient to write the system of differential equations and initial conditions in dimensionless form. For example, in equation (31) the numerator and denominator on the right-hand side may be divided by e_{cr}, and both sides of the equation may be divided by $\frac{\lambda E \sigma_{cr}{}^{2n} k_t{}^{k-1}}{3^n}$. The remaining equations of interest may be nondimensionalized, and the resulting system of differential equations is:

$$\frac{dW}{d\tau} = \frac{W\left(\bar{I}_{x01} + \bar{I}_{y10}\right) + 2\left[\frac{1}{1 - \mu}\left(\bar{I}_{xb} + \bar{I}_{yb}\right) - \frac{1}{1 + \mu}\bar{I}_{xyb}\right]}{\frac{3\left(1 - \mu^2\right)}{4} W^2 + \bar{\sigma}_{x00} + 1 + \frac{\bar{\sigma}_{x01} + \bar{\sigma}_{y10}}{2}} \tag{32a}$$

$$\frac{d\bar{\sigma}_{x01}}{d\tau} = \frac{3(1 - \mu^2)}{4} W \frac{dW}{d\tau} - 2\bar{I}_{x01} \tag{32b}$$

$$\frac{d\bar{\sigma}_{y10}}{d\tau} = \frac{3(1 - \mu^2)}{4} W \frac{dW}{d\tau} - 2\bar{I}_{y10} \tag{32c}$$

$$\frac{d\bar{\tau}_{xyb}}{d\tau} = - \frac{3(1 - \mu)}{2} \frac{dW}{d\tau} - \frac{6}{1 + \mu} \bar{\tau}_{xyb} \tag{32d}$$

$$\frac{d\bar{\sigma}_{xb}}{d\tau} = \frac{3(1 + \mu)}{2} \frac{dW}{d\tau} - \frac{12}{1 - \mu^2}\left(\bar{I}_{xb} + \mu\bar{I}_{yb}\right) \tag{32e}$$

$$\frac{d\bar{\sigma}_{yb}}{d\tau} = \frac{3(1 + \mu)}{2}\frac{dW}{d\tau} - \frac{12}{1 - \mu^2}\left(\bar{I}_{yb} + \mu\bar{I}_{xb}\right) \tag{32f}$$

$$\frac{d\bar{\tau}_{xy11}}{d\tau} = -\left(\bar{I}_{x11} + \bar{I}_{y11} + \bar{I}_{xy11}\right) \tag{32g}$$

In equations (32), $W = \frac{w_{11}b}{h}$, $\tau = \frac{\lambda E\sigma_{cr}{}^{2n}t^k}{3^n}$, the dimensionless stress coefficients (represented by the symbols with bars) are the stress coefficients divided by σ_{cr}, and the dimensionless integrals $\bar{I}$ are the integrals I divided by $\frac{e_{cr}\lambda E\sigma_{cr}{}^{2n}kt^{k-1}}{3^n}$.

The initial conditions (eqs. (A7n) and (A8) to (A11)) can be written in dimensionless form as follows:

$$\left.\begin{aligned}
&\bar{\tau}_{xy11} = 0 \\
&\bar{\sigma}_{x01} = \bar{\sigma}_{y10} = \frac{3(1 - \mu^2)}{8}\left(W^2 - W_i{}^2\right) \\
&\bar{\sigma}_{xb} = \bar{\sigma}_{yb} = \frac{3(1 + \mu)}{2}(W - W_i) \\
&\bar{\tau}_{xyb} = -\frac{3(1 - \mu)}{2}(W - W_i) \\
&W^3 + W\left[\frac{8}{3(1 - \mu^2)}(1 - \bar{P}) - W_i{}^2\right] - \frac{8}{3(1 - \mu^2)}W_i = 0
\end{aligned}\right\} \tag{33}$$

Numerical methods are available for solving systems such as equations (32). Two of these methods, the modified Euler method and the Runge-Kutta method, are described in reference 11, and the latter was used to obtain the calculated results presented in this paper. The pertinent integrals in equations (25) have been evaluated for $n = 0$ and $n = 1$ and the results are presented in appendix B.

Unit Shortening and Effective Width

One interesting feature of this analysis is the possibility of calculating the history of the unit shortening of the plate. By combining equations (24a) and (A7a) and writing in dimensionless form, the following expression is obtained for $\bar{e}$, the ratio of the unit shortening at a given value of τ to the critical unit shortening for the plate:

$$\bar{e} = \frac{3(1 - \mu^2)}{8}\left(W^2 - W_i^2\right) + \bar{P} - \int_0^\tau \bar{I}_{x00}\, d\tau \tag{34}$$

When the lateral deflection coefficients and stress coefficients are known from the solution of equations (32), the history of $\bar{e}$ can be calculated from equation (34).

Closely associated with unit shortening is the concept of effective width. An effective width for a plate subject to creep may be defined analogous to the effective width of a buckled elastic or elastic-plastic plate. That is, the effective width at a given time and unit shortening is that width of plate which would support the actual load on the plate if the stress were uniform and equal to the stress obtained from the creep law at the given time and at a strain equal to the given unit shortening. In symbols this definition can be written as:

$$\frac{b_e}{b} = \frac{\bar{\sigma}_{x00}}{\bar{\sigma}_{cl}} \tag{35}$$

where b_e is the effective width of the plate, and $\bar{\sigma}_{cl}$ is the stress obtained from the creep law at the unit shortening and time associated with the actual plate. The proper value of $\bar{\sigma}_{cl}$ in equation (35) can be found by substituting the appropriate values of $\bar{e}$ and τ from equation (34) into the uniaxial creep law, which, in dimensionless form, is

$$\bar{e} = -\left(\bar{\sigma}_{cl} + \frac{2}{3}\tau\bar{\sigma}_{cl}^{2n+1}\right) \tag{36}$$

Equation (36) has only one real root for $\bar{\sigma}_{cl}$, and this root is negative no matter what integer value n takes. This root of equation (36), then, is the required value of $\bar{\sigma}_{cl}$ in equation (35) for a given combination of τ and $\bar{e}$.

RESULTS AND DISCUSSION

Brief calculations were made of the lateral deflection history at the center of the plate as a function of the time parameter τ for a plate composed of a linear viscoelastic material. For a plate with a cubic uniaxial creep law, more extensive calculations were made of histories of lateral deflection, unit shortening, and effective width as functions of τ. These calculations consisted of solving numerically for the lateral deflection and stresses from equations (32) and initial conditions (eqs. (33)). For most of the calculations involving a nonlinear material, the lateral deflection and stresses were calculated by using the Runge-Kutta method and an IBM type 650 electronic data processing machine. Then it was possible to calculate unit shortening from equation (34) and effective width from equations (35) and (36).

In the calculations for a nonlinear material the applied load was varied from 0.4 to 1.2 times the elastic buckling load. An initial imperfection of 0.01 times the plate thickness was assumed for each value of applied load. In addition, for an applied load of 0.8 times the buckling load, three other initial imperfections were assumed, ranging from 0.001 to 0.03 times the plate thickness. Some discussion of these results is presented in the succeeding paragraphs.

Lateral Deflection

The results of the lateral deflection calculations are shown in figures 2 and 3 where lateral deflection at the center of the plate divided by plate thickness is plotted against the time parameter τ. In figure 2 a comparison is made between the results of the present calculations and the theory of reference 3 for a linear viscoelastic material ($n = 0$). These calculations were made for an applied load equal to 0.4 times the elastic buckling load and an initial imperfection at the center of the plate of 0.01 times the plate thickness. The curve labeled "Present theory - small-deflection" was calculated with the large-deflection terms in equations (8) neglected. This result should compare directly with that of reference 3 which also is a small-deflection analysis. The discrepancy can be attributed to the fact that the uniaxial and polyaxial creep laws used in reference 3 are compatible only for an incompressible material and, therefore, the application of the theory of reference 3 to a compressible material is not strictly correct. The results in figure 2 are typical and give a qualitative indication of the comparison for other applied loadings and initial imperfections. Finally, figure 2 illustrates the divergence of the small-deflection theory from the large-deflection theory.

Results for a plate material having a cubic uniaxial creep law ($n = 1$) are shown in figure 3. A comparison between small- and large-deflection theory for the nonlinear material is also shown in figure 3. Various applied loadings and, for one loading, various initial imperfections are included in this figure.

Results are plotted up to a lateral deflection of twice the plate thickness, although calculations were carried considerably beyond this point in some cases. Beyond a lateral deflection of twice the plate thickness, the accuracy of the assumed deflection shape in approximating the deflection at the center of the plate becomes questionable.

In theoretical analyses of the creep behavior of columns, it has been the usual practice to define a collapse time as being that value of time at which the lateral deflection or lateral-deflection rate becomes infinite. A column made of a linear viscoelastic material does not exhibit such a collapse time but a column made of a nonlinear material does. Similarly, the results of the plate calculations for a linear material do not yield a collapse time. The lateral deflection curves shown in figure 2 continue to increase with τ but become infinite only for infinite τ. The plate calculations for a nonlinear material do yield a collapse time if small-deflection theory is used. The curve for small-deflection theory shown in figure 3 illustrates this situation. This curve approaches infinity asymptotically as indicated by the vertical dash-dot line. This collapse time does not occur, however, until long after the small-deflection theory has become invalid. The method suggested in reference 5 also yields a collapse time. The calculations from the present theory for a nonlinear material and based on large-deflection theory, on the other hand, do not yield a finite collapse time. The lateral deflection in this case increases with time, but infinite deflection does not occur until infinite time.

The results shown in figure 3 for various initial imperfections at $\overline{P} = 0.8$ indicate that initial imperfections may have a significant influence on the plate creep deflections. The influence of applied load on creep deflections, however, is considerably more important than that of initial imperfections. Results similar to these have been reported in column creep studies (ref. 12).

The curves in figure 3 for various initial imperfections at $\overline{P} = 0.8$ are very nearly parallel. That is, the curves for the larger values of W_i can be obtained closely (not exactly) by a simple translation to the left. At a given value of W the slopes of the curves for W plotted against τ for a given value of $\overline{P}$ appear to be practically independent of W_i. In the lower part of figure 3 the τ scale is magnified to illustrate this situation.

Unit Shortening and Effective Width

The calculated unit shortening of the plate as a function of τ is presented in figure 4. Note that the τ scale is magnified for clarity in the lower part of this figure. The dashed lines were computed from the uniaxial creep law which can be written in dimensionless form as:

$$\bar{e} = -\left(\bar{\sigma} + \frac{2}{3}\bar{\sigma}^3\tau\right) \tag{37}$$

If the initial imperfection is sufficiently small and the applied load is less than the elastic buckling load, the unit shortening curves start out very nearly identical to the creep law and diverge smoothly from the creep law. The unit shortening curves become identical to the creep curves if the initial imperfection goes to zero. Thus when τ is small, the creep law can provide a first approximation to the unit shortening as might be expected. For applied loads higher than the elastic buckling load, such an approximation may not be valid as the unit shortening curves start out above the creep curves.

A plot of effective width divided by actual width of plate against τ is presented in figure 5. Again, in the lower portion of the figure the τ scale is magnified for clarity. It is seen that creep may cause a significant decrease in the effective width of a plate.

Stress Distribution

In figure 6 are presented the middle-surface stresses along the edges of a plate with $\bar{P} = 0.8$ and $W_i = 0.01$ at two values of τ. As a result of creep there can be considerable redistribution of middle surface stress as time increases. Along the edges of the plate which are subjected to the applied load there is a tendency for the stresses at the edges to increase and the stress in the center to decrease. Furthermore, as creep progresses, significant stresses can arise along the so-called unloaded edges of the plate provided these edges are constrained to remain straight. The middle-surface stress distribution in a square plate undergoing creep, then, resembles that in a buckled elastic plate.

Collapse Time

As previously mentioned, the large-deflection analysis in this report does not yield a finite collapse time for the plate of a nonlinear material. It is known from experiment (ref. 1) that plates supported in V-groove fixtures do collapse in finite time when subject to creep. The V-groove

fixtures approximate the simply supported edge condition but do not provide the straight edge constraint assumed for this analysis. This assumption of straight edges seems to be more realistic than the V-groove support in approximating a portion of sheet lying between stiffeners in certain multiple bay stiffened panels, for example. Although a plate which satisfies the edge conditions assumed in this analysis may last longer than a V-groove supported plate, it does not seem reasonable that such a plate would never collapse. These matters probably cannot be clarified without further experimental work.

An actual plate or column, of course, always has finite deflections and strains even after collapse. The usual definition of collapse time appears reasonable for a column because calculations show that infinite deflection rates or strain rates are approached while the theory is still supposed to be a good approximation of reality. The results of the present investigation indicate that this situation is not valid for plates. Perhaps some additional considerations are required before a satisfactory theoretical description of plate creep collapse can be given.

There is a similarity between the results of the present analysis and the results of reference 10. In that investigation an analysis was made of a plate which was buckled in the elastic range and then compressed into the plastic range. It was found that no maximum load resulted from the analysis. In reference 10 possible changes in buckle pattern which occur in experiment were not taken into account. Such changes have been ruled out of the present analysis, and this assumption may be satisfactory for a square plate. Some consideration probably should be given to this phenomenon, however, in the study of the creep of rectangular plates with aspect ratios other than unity. Another possible refinement in the present analysis is the use of an improved stress distribution through the thickness of the plate. In addition, modification of the creep law or the values of the constants in the creep law may be required at large creep strains.

Even though a theory does not yield quantitatively useful results, it may aid in finding parameters which correlate test data. The present theory suggests that a useful correlation might result from a plot of $\overline{P}$ against the time parameter τ with the experimental collapse time substituted in place of t. In such a procedure perhaps it could be assumed that initial imperfections would not be widely different for flat plates manufactured by similar methods. It is interesting to note that τ is a simple parameter which includes material properties and plate geometry and can be obtained directly from the creep law without recourse to an elaborate theory.

CONCLUDING REMARKS

An analysis has been made of a square plate composed of a material subject to creep. The plate is assumed to have small initial imperfections. The material is assumed to follow a generalized power creep law which accounts for the biaxial state of stress. Calculations have been made for a value of the exponent in the generalized creep law which corresponds to an exponent of 3 in the uniaxial power creep law and for a linear viscoelastic plate.

Calculations based on small-deflection theory and a nonlinear material yield a collapse time - that is, a finite time at which the lateral deflection becomes infinite. The more refined calculations based on large-deflection plate theory, however, do not yield a finite collapse time. Test results show that plates supported in V-groove fixtures do collapse in finite time. The assumptions underlying the present theory, however, seem to be more realistic than V-groove supports for certain types of plates which might be encountered in practice. Thus, the theory indicates the possibility that certain practical plates may carry a given load significantly longer than geometrically similar V-groove supported plates.

It is found that although initial imperfections have a significant influence on creep deflections, applied load has a much stronger influence. Creep in a plate can cause considerable redistribution of the middle-surface stresses. Along the loaded edges of the plate the stresses tend to increase at the ends and decrease in the center. In addition, significant stresses can grow along the unloaded edges provided these edges remain straight. Finally, as creep progresses, the effective width of the plate is reduced.

Langley Aeronautical Laboratory,
National Advisory Committee for Aeronautics,
Langley Field, Va., July 23, 1958.

APPENDIX A

DERIVATION OF INITIAL CONDITIONS

In this appendix the initial conditions for the creep solution are derived. These conditions define the state of stress and strain in the plate just subsequent to the load application but prior to the beginning of creep. Thus, it is an elastic solution with no creep which is sought here.

Reissner's Principle

An approximate elastic solution can be obtained by the use of Reissner's variational theorem. (See ref. 7.) The form of the theorem appropriate for the present problem can be stated as follows: The state of stress and displacement which exists in the plate is determined by the variational equation $\delta\Pi_R = 0$ where

$$\Pi_R = \int_{-h/2}^{h/2}\int_{-b/2}^{b/2}\int_{-b/2}^{b/2}\left\{\left[\frac{\partial u}{\partial x} + \frac{1}{2}\left(\frac{\partial w}{\partial x}\right)^2 - \frac{1}{2}\left(\frac{\partial w_i}{\partial x}\right)^2 - z\frac{\partial^2 w}{\partial x^2} + z\frac{\partial^2 w_i}{\partial x^2}\right]\sigma_x + \right.$$

$$\left[\frac{\partial v}{\partial y} + \frac{1}{2}\left(\frac{\partial w}{\partial y}\right)^2 - \frac{1}{2}\left(\frac{\partial w_i}{\partial y}\right)^2 - z\frac{\partial^2 w}{\partial y^2} + z\frac{\partial^2 w_i}{\partial y^2}\right]\sigma_y + \left(\frac{\partial u}{\partial y} + \frac{\partial v}{\partial x} + \frac{\partial w}{\partial x}\frac{\partial w}{\partial y} - \right.$$

$$\left.\frac{\partial w_i}{\partial x}\frac{\partial w_i}{\partial y} - 2z\frac{\partial^2 w}{\partial x\,\partial y} + 2z\frac{\partial^2 w_i}{\partial x\,\partial y}\right)\tau_{xy} - \frac{1}{2E}\left[\sigma_x^2 + \sigma_y^2 - 2\mu\sigma_x\sigma_y + \right.$$

$$\left.\left.2(1 + \mu)\tau_{xy}^2\right]\right\} dx\,dy\,dz - Peb \tag{A1}$$

In equation (A1), w_i represents the initial imperfection in the plate.

A Rayleigh-Ritz procedure is used to obtain a solution. Spatial distributions, which contain arbitrary coefficients, are assumed for the displacements and stresses in the plate. These expressions are substituted into the equation for Π_R, and the variation of Π_R is equated to zero.

This procedure is the same as equating to zero the partial derivatives of Π_R with respect to each unknown coefficient. There results a system of simultaneous linear algebraic equations which determine the unknowns.

Assumed Displacements and Stresses

The displacement and stress distributions are taken as follows:

$$\left.\begin{aligned} u &= -ex + b\left(u_{10} + u_{11} \cos \frac{2\pi y}{b}\right)\sin \frac{2\pi x}{b} \\ v &= fy + b\left(v_{01} + v_{11} \cos \frac{2\pi x}{b}\right)\sin \frac{2\pi y}{b} \\ w &= bw_{11} \cos \frac{\pi x}{b} \cos \frac{\pi y}{b} \end{aligned}\right\} \tag{A2}$$

$$\left.\begin{aligned} \sigma_x &= \sigma_{x00} + \sigma_{x10} \cos \frac{2\pi x}{b} + \sigma_{x01} \cos \frac{2\pi y}{b} + \sigma_{x11} \cos \frac{2\pi x}{b} \cos \frac{2\pi y}{b} + \sigma_{xb} \frac{2z}{h} \cos \frac{\pi x}{b} \cos \frac{\pi y}{b} \\ \sigma_y &= \sigma_{y00} + \sigma_{y10} \cos \frac{2\pi x}{b} + \sigma_{y01} \cos \frac{2\pi y}{b} + \sigma_{y11} \cos \frac{2\pi x}{b} \cos \frac{2\pi y}{b} + \sigma_{yb} \frac{2z}{h} \cos \frac{\pi x}{b} \cos \frac{\pi y}{b} \\ \tau_{xy} &= \tau_{xy11} \sin \frac{2\pi x}{b} \sin \frac{2\pi y}{b} + \tau_{xyb} \frac{2z}{h} \sin \frac{\pi x}{b} \sin \frac{\pi y}{b} \end{aligned}\right\} \tag{A3}$$

These distributions are the same as equations (19) and (20) except the dots are omitted. Here, of course, the assumption of a linear variation of stresses in the z-direction is consistent with elastic material behavior. The initial imperfection is assumed to be in the same shape as the lateral deflection in equations (A2), that is:

$$w_i = bw_{11i} \cos \frac{\pi x}{b} \cos \frac{\pi y}{b} \tag{A4}$$

Algebraic Equations for Coefficients

When equations (A2), (A3), and (A4) are substituted into equation (A1) for Π_R and the indicated integrations performed, there is obtained:

$$\Pi_R = hb^2\left[-\sigma_{x00}e + \sigma_{y00}f + \frac{\pi^2}{8}\left(w_{11}^2 - w_{11i}^2\right)\left(\sigma_{x00} + \sigma_{y00} - \frac{\sigma_{x10} - \sigma_{y10}}{2} + \right.\right.$$

$$\left.\frac{\sigma_{x01} - \sigma_{y01}}{2} - \frac{\sigma_{x11} + \sigma_{y11}}{4} + \frac{\tau_{xy11}}{2}\right) + \pi\left(\sigma_{x10}u_{10} + \sigma_{y01}v_{01} + \right.$$

$$\left.\frac{\sigma_{x11}u_{11} + \sigma_{y11}v_{11}}{2} - \frac{u_{11} + v_{11}}{2}\tau_{xy11}\right) + \frac{\pi^2}{24}\frac{h}{b}\left(w_{11} - w_{11i}\right)\left(\sigma_{xb} + \right.$$

$$\left.\sigma_{yb} - 2\tau_{xyb}\right) - \frac{1}{2E}\left(\sigma_{x00}^2 + \sigma_{y00}^2 + \frac{\sigma_{x10}^2 + \sigma_{y10}^2}{2} + \frac{\sigma_{x01}^2 + \sigma_{y01}^2}{2} + \right.$$

$$\left.\frac{\sigma_{x11}^2 + \sigma_{y11}^2}{4} + \frac{\sigma_{xb}^2 + \sigma_{yb}^2}{12}\right) + \frac{\mu}{E}\left(\sigma_{x00}\sigma_{y00} + \frac{\sigma_{x10}\sigma_{y10} + \sigma_{x01}\sigma_{y01}}{2} + \right.$$

$$\left.\left.\frac{\sigma_{x11}\sigma_{y11}}{4} + \frac{\sigma_{xb}\sigma_{yb}}{12}\right) - \frac{1 + \mu}{12E}\left(3\tau_{xy11}^2 + \tau_{xyb}^2\right)\right] - Peb \tag{A5}$$

The conditions which the unknown coefficients must satisfy are:

$$\frac{\partial\Pi_R}{\partial\sigma_{x00}} = \frac{\partial\Pi_R}{\partial\sigma_{x10}} = \frac{\partial\Pi_R}{\partial\sigma_{x01}} = \frac{\partial\Pi_R}{\partial\sigma_{x11}} = \frac{\partial\Pi_R}{\partial\sigma_{xb}} = \frac{\partial\Pi_R}{\partial\sigma_{y00}} = \frac{\partial\Pi_R}{\partial\sigma_{y10}}$$

$$= \frac{\partial\Pi_R}{\partial\sigma_{y01}} = \frac{\partial\Pi_R}{\partial\sigma_{y11}} = \frac{\partial\Pi_R}{\partial\sigma_{yb}} = \frac{\partial\Pi_R}{\partial\tau_{xy11}} = \frac{\partial\Pi_R}{\partial\tau_{xyb}} = \frac{\partial\Pi_R}{\partial e}$$

$$= \frac{\partial\Pi_R}{\partial u_{10}} = \frac{\partial\Pi_R}{\partial u_{11}} = \frac{\partial\Pi_R}{\partial f} = \frac{\partial\Pi_R}{\partial v_{01}} = \frac{\partial\Pi_R}{\partial v_{11}} = \frac{\partial\Pi_R}{\partial w_{11}} = 0 \tag{A6}$$

After the operations indicated in equations (A6) are performed, some algebraic manipulation leads to the following 19 equations:

$$-e + \frac{\pi^2}{8}\left(w_{11}^2 - w_{11i}^2\right) - \frac{\sigma_{x00}}{E} = 0 \tag{A7a}$$

$$\pi u_{10} - \frac{\pi^2}{16}\left(w_{11}{}^2 - w_{11i}{}^2\right) + \frac{\mu\sigma_{y10}}{2E} = 0 \tag{A7b}$$

$$\frac{\pi^2}{16}\left(w_{11}{}^2 - w_{11i}{}^2\right) - \frac{\sigma_{x01}}{2E} = 0 \tag{A7c}$$

$$\frac{\pi}{2} u_{11} - \frac{\pi^2}{32}\left(w_{11}{}^2 - w_{11i}{}^2\right) = 0 \tag{A7d}$$

$$\frac{\pi^2}{24}\frac{h}{b}\left(w_{11} - w_{11i}\right) - \frac{\sigma_{xb} - \mu\sigma_{yb}}{12E} = 0 \tag{A7e}$$

$$f + \frac{\pi^2}{8}\left(w_{11}{}^2 - w_{11i}{}^2\right) + \frac{\mu\sigma_{x00}}{E} = 0 \tag{A7f}$$

$$\frac{\pi^2}{16}\left(w_{11}{}^2 - w_{11i}{}^2\right) - \frac{\sigma_{y10}}{2E} = 0 \tag{A7g}$$

$$\pi v_{01} - \frac{\pi^2}{16}\left(w_{11}{}^2 - w_{11i}{}^2\right) + \frac{\mu\sigma_{x01}}{2E} = 0 \tag{A7h}$$

$$\frac{\pi}{2} v_{11} - \frac{\pi^2}{32}\left(w_{11}{}^2 - w_{11i}{}^2\right) = 0 \tag{A7i}$$

$$\frac{\pi^2}{24}\frac{h}{b}\left(w_{11} - w_{11i}\right) - \frac{\sigma_{yb} - \mu\sigma_{xb}}{12E} = 0 \tag{A7j}$$

$$\frac{\pi^2}{12}\frac{h}{b}\left(w_{11} - w_{11i}\right) + \frac{1 + \mu}{6E}\tau_{xyb} = 0 \tag{A7k}$$

$$w_{11}\left(\sigma_{x00} + \frac{\sigma_{x01}}{2} + \frac{\sigma_{y10}}{2}\right) + \frac{1}{6}\frac{h}{b}\left(\sigma_{xb} + \sigma_{yb} - 2\tau_{xyb}\right) = 0 \tag{A7l}$$

$$hb\sigma_{x00} = -P \tag{A7m}$$

$$\sigma_{y00} = \sigma_{x10} = \sigma_{y01} = \sigma_{x11} = \sigma_{y11} = \tau_{xy11} = 0 \tag{A7n}$$

Solution of Algebraic Equations

Not all of equations (A7) are required to obtain the information needed in this investigation. The procedure is to solve for the stress coefficients in terms of w_{11} and w_{11i} and then to substitute these expressions into equation (A7l). Thus, there is obtained an equation from which w_{11} at time zero can be calculated.

From equations (A7c) and (A7g):

$$\sigma_{x01} = \sigma_{y10} = \frac{E\pi^2}{8}\left(w_{11}^2 - w_{11i}^2\right) \tag{A8}$$

The simultaneous solution of equations (A7e) and (A7j) yields:

$$\sigma_{xb} = \sigma_{yb} = \frac{E\pi^2}{2(1 - \mu)}\frac{h}{b}\left(w_{11} - w_{11i}\right) \tag{A9}$$

From equation (A7k) the following is obtained:

$$\tau_{xyb} = -\frac{E\pi^2}{2(1 + \mu)}\frac{h}{b}\left(w_{11} - w_{11i}\right) \tag{A10}$$

When equations (A8), (A9), and (A10) are substituted into equation (A7l) and use is made of the fact that $\sigma_{x00} = -\frac{P}{bh}$ (eq. (A7m)), the result can be written as follows:

$$w_{11}^3 + w_{11}\left[\frac{8}{3\left(1 - \mu^2\right)}\left(\frac{h}{b}\right)^2\left(1 - \overline{P}\right) - w_{11i}^2\right] - \frac{8}{3\left(1 - \mu^2\right)}\left(\frac{h}{b}\right)^2 w_{11i} = 0 \tag{A11}$$

where $\overline{P}$ is the ratio of the applied load to the elastic buckling load. The positive real root of equation (A11), which can be obtained by trial and error, gives the initial condition for w_{11} - that is, the value of w_{11} immediately subsequent to the load application. The initial conditions for the stress coefficients can then be calculated from equations (A8), (A9), and (A10).

APPENDIX B

RESULTS OF EVALUATION OF INTEGRALS REQUIRED FOR CALCULATIONS

In order to perform the calculations for this report the integrals $\overline{I}$ in equation (32) and equation (34) must be evaluated for the proper values of n, the exponent in equation (11) for the function F. The results are as follows:

For $n = 0$ (linear viscoelastic material)

$$\overline{I}_{x01} = \frac{\overline{\sigma}_{x01}}{3}$$

$$\overline{I}_{y10} = \frac{\overline{\sigma}_{y10}}{3}$$

$$\overline{I}_{x11} = \overline{I}_{y11} = \frac{\overline{\tau}_{xy11}}{12}$$

$$\overline{I}_{xb} = \frac{2\overline{\sigma}_{xb} - \overline{\sigma}_{yb}}{36}$$

$$\overline{I}_{yb} = \frac{2\overline{\sigma}_{yb} - \overline{\sigma}_{xb}}{36}$$

$$\overline{I}_{xy11} = \frac{\overline{\tau}_{xy11}}{2}$$

$$\overline{I}_{xyb} = \frac{\overline{\tau}_{xyb}}{6}$$

For $n = 1$ (cubic uniaxial creep law)

$$\bar{I}_{x00} = \frac{1}{3}\left(\bar{\sigma}_{x00}\left\{2\bar{\sigma}_{x00}^{2} + \frac{3}{2}\left(2\bar{\sigma}_{x01}^{2} + \bar{\sigma}_{y10}^{2}\right) + \frac{1}{4}\left[\left(\bar{\sigma}_{xb} - \bar{\sigma}_{yb}\right)^{2} + \bar{\sigma}_{xb}^{2} + 2\bar{\tau}_{xyb}^{2}\right]\right\} - \frac{\bar{\sigma}_{y10}}{8}\left[\left(\bar{\sigma}_{xb} - \bar{\sigma}_{yb}\right)^{2} - \bar{\tau}_{xyb}^{2}\right] + \frac{\bar{\sigma}_{x01}}{8}\left[\left(\bar{\sigma}_{xb} - \bar{\sigma}_{yb}\right)^{2} + \bar{\sigma}_{xb}^{2} - 2\bar{\tau}_{xyb}^{2}\right] + \frac{\bar{\tau}_{xy11}}{16}\left[\bar{\sigma}_{xb}^{2} + \bar{\tau}_{xyb}^{2} + 2\bar{\tau}_{xyb}\left(2\bar{\sigma}_{xb} - \bar{\sigma}_{yb}\right)\right] + \bar{\tau}_{xy11}^{2}\left(\frac{9}{4}\bar{\sigma}_{x00}\right)\right)$$

$$\bar{I}_{x01} = \frac{1}{3}\left(\bar{\sigma}_{x01}\left\{3\left(\bar{\sigma}_{x00}^{2} + \frac{\bar{\sigma}_{y10}^{2}}{4} + \frac{\bar{\sigma}_{x01}^{2}}{4}\right) + \frac{1}{8}\left[\left(\bar{\sigma}_{xb} - \bar{\sigma}_{yb}\right)^{2} + \bar{\sigma}_{xb}^{2} + 2\bar{\tau}_{xyb}^{2}\right]\right\} + \frac{\bar{\sigma}_{x00}}{8}\left[\left(\bar{\sigma}_{xb} - \bar{\sigma}_{yb}\right)^{2} + \bar{\sigma}_{xb}^{2} - 2\bar{\tau}_{xyb}^{2}\right] - \frac{\bar{\sigma}_{y10}}{16}\left[\left(\bar{\sigma}_{xb} - \bar{\sigma}_{yb}\right)^{2} + \bar{\tau}_{xyb}^{2}\right] + \frac{\bar{\tau}_{xy11}}{16}\left(\bar{\sigma}_{xb}^{2} - \bar{\tau}_{xyb}^{2}\right) + \bar{\tau}_{xy11}^{2}\left(\frac{15}{16}\bar{\sigma}_{x01}\right)\right)$$

$$\bar{I}_{y10} = \frac{1}{3}\left(\bar{\sigma}_{y10}\left\{3\left(\frac{\bar{\sigma}_{x00}^{2}}{2} + \frac{\bar{\sigma}_{x01}^{2}}{4} + \frac{\bar{\sigma}_{y10}^{2}}{4}\right) + \frac{1}{8}\left[\left(\bar{\sigma}_{xb} - \bar{\sigma}_{yb}\right)^{2} + \bar{\sigma}_{yb}^{2} + 2\bar{\tau}_{xyb}^{2}\right]\right\} - \frac{\bar{\sigma}_{x00}}{8}\left[\left(\bar{\sigma}_{xb} - \bar{\sigma}_{yb}\right)^{2} - \bar{\tau}_{xyb}^{2}\right] - \frac{\bar{\sigma}_{x01}}{16}\left[\left(\bar{\sigma}_{xb} - \bar{\sigma}_{yb}\right)^{2} + \bar{\tau}_{xyb}^{2}\right] + \frac{\bar{\tau}_{xy11}}{16}\left(\bar{\sigma}_{yb}^{2} - \bar{\tau}_{xyb}^{2}\right) + \bar{\tau}_{xy11}^{2}\left(\frac{15}{16}\bar{\sigma}_{y10}\right)\right)$$

$$\bar{I}_{x11} = \frac{1}{3}\left\{\frac{\bar{\sigma}_{x00}}{16}\left[\left(\bar{\sigma}_{xb} - \bar{\sigma}_{yb}\right)^{2} + \bar{\sigma}_{xb}^{2} + 2\bar{\tau}_{xyb}^{2}\right] - \frac{\bar{\sigma}_{y10}}{16}\left[\left(\bar{\sigma}_{xb} - \bar{\sigma}_{yb}\right)^{2} - \bar{\tau}_{xyb}^{2}\right] + \frac{\bar{\sigma}_{x01}}{16}\left[\left(\bar{\sigma}_{xb} - \bar{\sigma}_{yb}\right)^{2} + \bar{\sigma}_{xb}^{2} - 2\bar{\tau}_{xyb}^{2}\right] - \frac{3}{2}\bar{\sigma}_{x00}\bar{\sigma}_{x01}\bar{\sigma}_{y10} + \frac{\bar{\tau}_{xy11}}{16}\left(12\bar{\sigma}_{x00}^{2} + 9\bar{\sigma}_{x01}^{2} + \bar{\sigma}_{xb}^{2} + \bar{\tau}_{xyb}^{2}\right) + \bar{\tau}_{xy11}^{3}\left(\frac{3}{16}\right)\right\}$$

$$\bar{I}_{y11} = \frac{1}{3}\left\{-\frac{\bar{\sigma}_{x00}}{16}\left[\left(\bar{\sigma}_{xb} - \bar{\sigma}_{yb}\right)^{2} + \bar{\tau}_{xyb}^{2}\right] + \frac{\bar{\sigma}_{y10}}{16}\left[\left(\bar{\sigma}_{xb} - \bar{\sigma}_{yb}\right)^{2} + \bar{\sigma}_{yb}^{2} - 2\bar{\tau}_{xyb}^{2}\right] - \frac{\bar{\sigma}_{x01}}{16}\left[\left(\bar{\sigma}_{xb} - \bar{\sigma}_{yb}\right)^{2} - \bar{\tau}_{xyb}^{2}\right] + \frac{\bar{\tau}_{xy11}}{16}\left(9\bar{\sigma}_{y10}^{2} + \bar{\sigma}_{yb}^{2} + \bar{\tau}_{xyb}^{2}\right) + \bar{\tau}_{xy11}^{3}\left(\frac{3}{16}\right) + \frac{3}{2}\bar{\sigma}_{x00}\bar{\sigma}_{x01}\bar{\sigma}_{y10}\right\}$$

$$\bar{I}_{xb} = \frac{1}{3}\left\{\frac{2\bar{\sigma}_{xb} - \bar{\sigma}_{yb}}{8}\left[2\bar{\sigma}_{x00}^{2} + \bar{\sigma}_{x01}^{2} + 2\bar{\sigma}_{x00}\bar{\sigma}_{x01} + \frac{9}{40}\left(\bar{\sigma}_{xb}^{2} + \bar{\sigma}_{yb}^{2} - \bar{\sigma}_{xb}\bar{\sigma}_{yb} + \frac{\bar{\tau}_{xyb}^{2}}{3}\right)\right] + \frac{\bar{\sigma}_{xb} - \bar{\sigma}_{yb}}{8}\left(\bar{\sigma}_{y10}^{2} - 2\bar{\sigma}_{x00}\bar{\sigma}_{y10} - \bar{\sigma}_{x01}\bar{\sigma}_{y10}\right) + \frac{\bar{\tau}_{xy11}}{8}\left[\bar{\sigma}_{xb}\left(\bar{\sigma}_{x00} + \bar{\sigma}_{x01}\right) + 2\bar{\sigma}_{x00}\bar{\tau}_{xyb}\right] + \frac{\bar{\tau}_{xy11}^{2}}{16}\left(3\bar{\sigma}_{xb} - \bar{\sigma}_{yb}\right)\right\}$$

$$\bar{I}_{yb} = \frac{1}{3}\left\{\frac{2\bar{\sigma}_{yb} - \bar{\sigma}_{xb}}{8}\left[\bar{\sigma}_{y10}^{2} + \frac{9}{40}\left(\bar{\sigma}_{xb}^{2} + \bar{\sigma}_{yb}^{2} - \bar{\sigma}_{xb}\bar{\sigma}_{yb} + \frac{\bar{\tau}_{xyb}^{2}}{3}\right)\right] + \frac{\bar{\sigma}_{yb} - \bar{\sigma}_{xb}}{8}\left(2\bar{\sigma}_{x00}^{2} + \bar{\sigma}_{x01}^{2} + 2\bar{\sigma}_{x01}\bar{\sigma}_{x00} - 2\bar{\sigma}_{x00}\bar{\sigma}_{y10} - \bar{\sigma}_{x01}\bar{\sigma}_{y10}\right) + \frac{\bar{\tau}_{xy11}}{8}\left(\bar{\sigma}_{y10}\bar{\sigma}_{yb} - \bar{\sigma}_{x00}\bar{\tau}_{xyb}\right) + \frac{\bar{\tau}_{xy11}}{16}\left(3\bar{\sigma}_{yb} - \bar{\sigma}_{xb}\right)\right\}$$

$$\bar{I}_{xy11} = 2\left\{\left(2\bar{\sigma}_{xb} - \bar{\sigma}_{yb}\right)\frac{\bar{\tau}_{xyb}\bar{\sigma}_{x00}}{48} + \frac{\bar{\tau}_{xy11}}{16}\left[4\bar{\sigma}_{x00}^{2} + \bar{\sigma}_{x01}^{2} + \bar{\sigma}_{y10}^{2} + \frac{1}{3}\left(\bar{\sigma}_{xb}^{2} + \bar{\sigma}_{yb}^{2} - \bar{\sigma}_{xb}\bar{\sigma}_{yb} + 9\bar{\tau}_{xyb}^{2}\right)\right] + \bar{\tau}_{xy11}^{3}\left(\frac{7}{16}\right)\right\}$$

$$\bar{I}_{xyb} = \frac{\bar{\tau}_{xyb}}{12}\left[2\bar{\sigma}_{x00}^{2} + \bar{\sigma}_{x01}^{2} + \bar{\sigma}_{y10}^{2} - 2\bar{\sigma}_{x00}\bar{\sigma}_{x01} + \bar{\sigma}_{x00}\bar{\sigma}_{y10} - \frac{\bar{\sigma}_{x01}\bar{\sigma}_{y10}}{2} + \frac{3}{40}\left(\bar{\sigma}_{xb}^{2} + \bar{\sigma}_{yb}^{2} - \bar{\sigma}_{xb}\bar{\sigma}_{yb} + 27\bar{\tau}_{xyb}^{2}\right)\right] + \frac{\bar{\tau}_{xy11}}{24}\left[\bar{\sigma}_{x00}\left(2\bar{\sigma}_{xb} - \bar{\sigma}_{yb}\right) + \bar{\tau}_{xyb}\left(\bar{\sigma}_{x00} - \bar{\sigma}_{x01} - \bar{\sigma}_{y10}\right)\right] + \bar{\tau}_{xy11}^{2}\left(\frac{5}{12}\bar{\tau}_{xyb}\right)$$

REFERENCES

1. Mathauser, Eldon E., and Deveikis, William D.: Investigation of the Compressive Strength and Creep Lifetime of 2024-T3 Aluminum-Alloy Plates at Elevated Temperatures. NACA Rep. 1308, 1957. (Supersedes NACA TN 3552.)

2. Gerard, George: A Creep Buckling Hypothesis. Jour. Aero. Sci., vol. 23, no. 9, Sept. 1956, pp. 879-882, 887.

3. Lin, T. H.: Creep Deflection of Viscoelastic Plate Under Uniform Edge Compression. Jour. Aero. Sci., vol. 23, no. 9, Sept. 1956, pp. 883-887.

4. Sanders, J. Lyell, Jr., McComb, Harvey G., Jr., and Schlechte, Floyd R.: A Variational Theorem for Creep With Applications to Plates and Columns. NACA Rep. 1342, 1958. (Supersedes NACA TN 4003.)

5. Pian, T. H. H., and Johnson, R. I.: On Creep Buckling of Columns and Plates. Tech. Rep. 25-24, Aeroelastic and Structures Res. Lab., M.I.T., Nov. 1957.

6. Wang, Alexander J., and Prager, William: Thermal and Creep Effects in Work-Hardening Elastic-Plastic Solids. Jour. Aero. Sci., vol. 21, no. 5, May 1954, pp. 343-344, 360.

7. Reissner, Eric: On a Variational Theorem for Finite Elastic Deformations. Jour. Math. and Phys., vol. XXXII, nos. 2-3, July-Oct. 1953, pp. 129-135.

8. Johnson, A. E.: Creep Under Complex Stress Systems at High Temperatures. Aircraft Engineering, vol. XXIV, no. 275, Jan. 1952, pp. 6-16.

9. Odqvist, Folke K. G.: Influence of Primary Creep on Stresses in Structural Parts. Nr-66, Trans. Roy. Inst. Tech. (Stockholm), 1953.

10. Mayers, J., and Budiansky, Bernard: Analysis of Behavior of Simply Supported Flat Plates Compressed Beyond the Buckling Load Into the Plastic Range. NACA TN 3368, 1955.

11. Scarborough, James B.: Numerical Mathematical Analysis. Second ed., The Johns Hopkins Press (Baltimore), 1950, pp. 235-240, 299-303.

12. Mathauser, Eldon E., and Brooks, William A., Jr.: An Investigation of the Creep Lifetime of 75S-T6 Aluminum-Alloy Columns. NACA TN 3204, 1954.

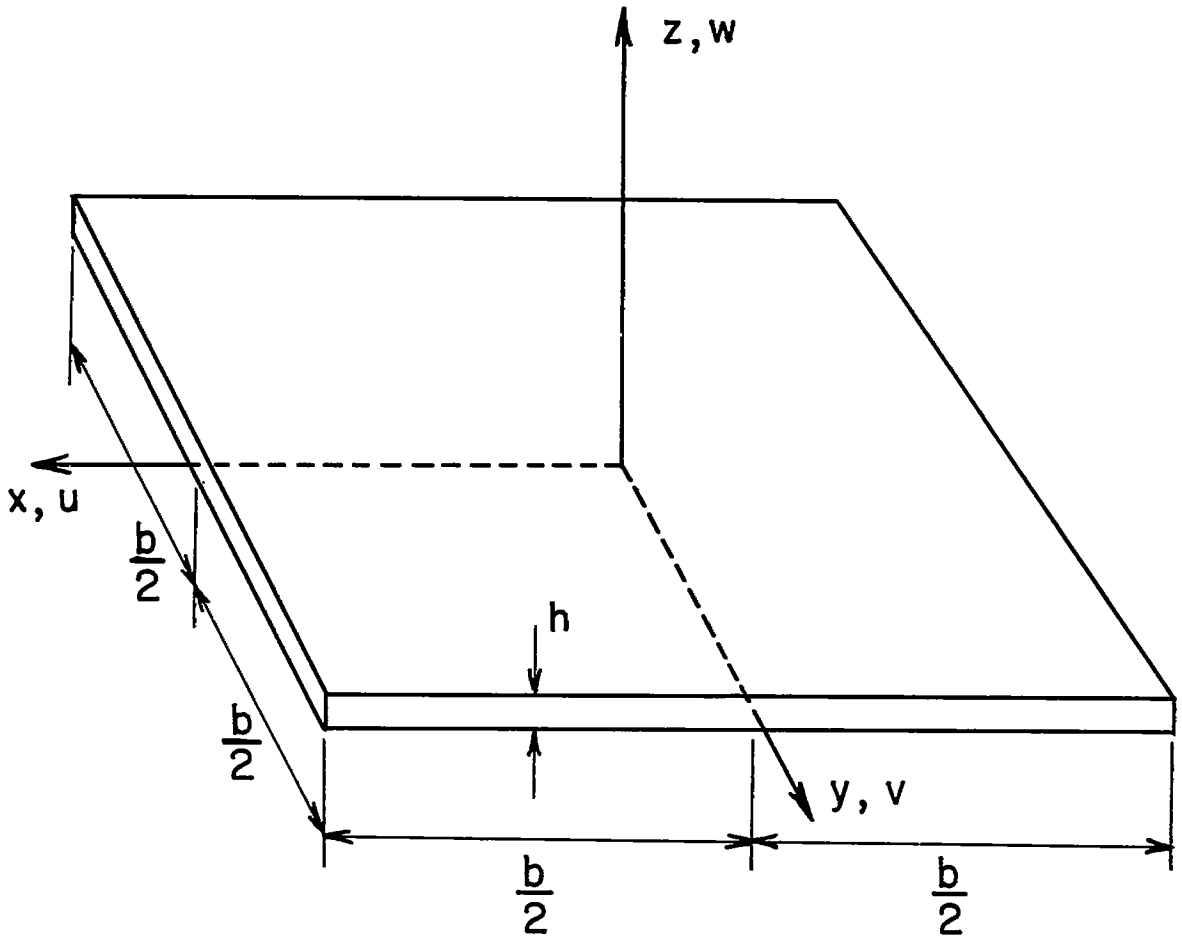

Figure 1.- Plate geometry and coordinate system considered in analysis.

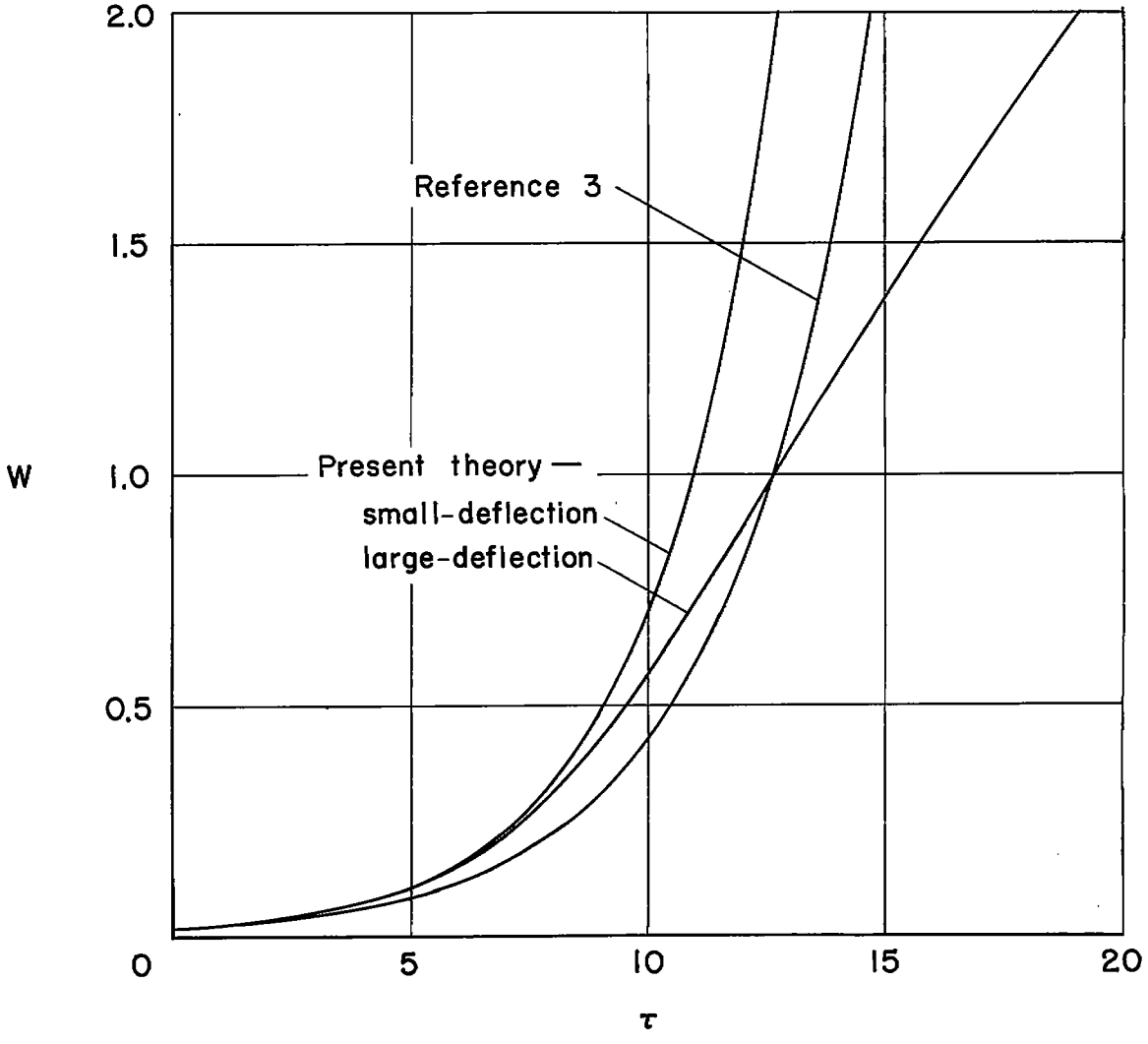

Figure 2.- Comparison of histories of lateral deflection at center of plate calculated by three theories for a linear viscoelastic material. $\overline{P} = 0.4$; $W_i = 0.01$; $n = 0$; $\mu = 0.3$.

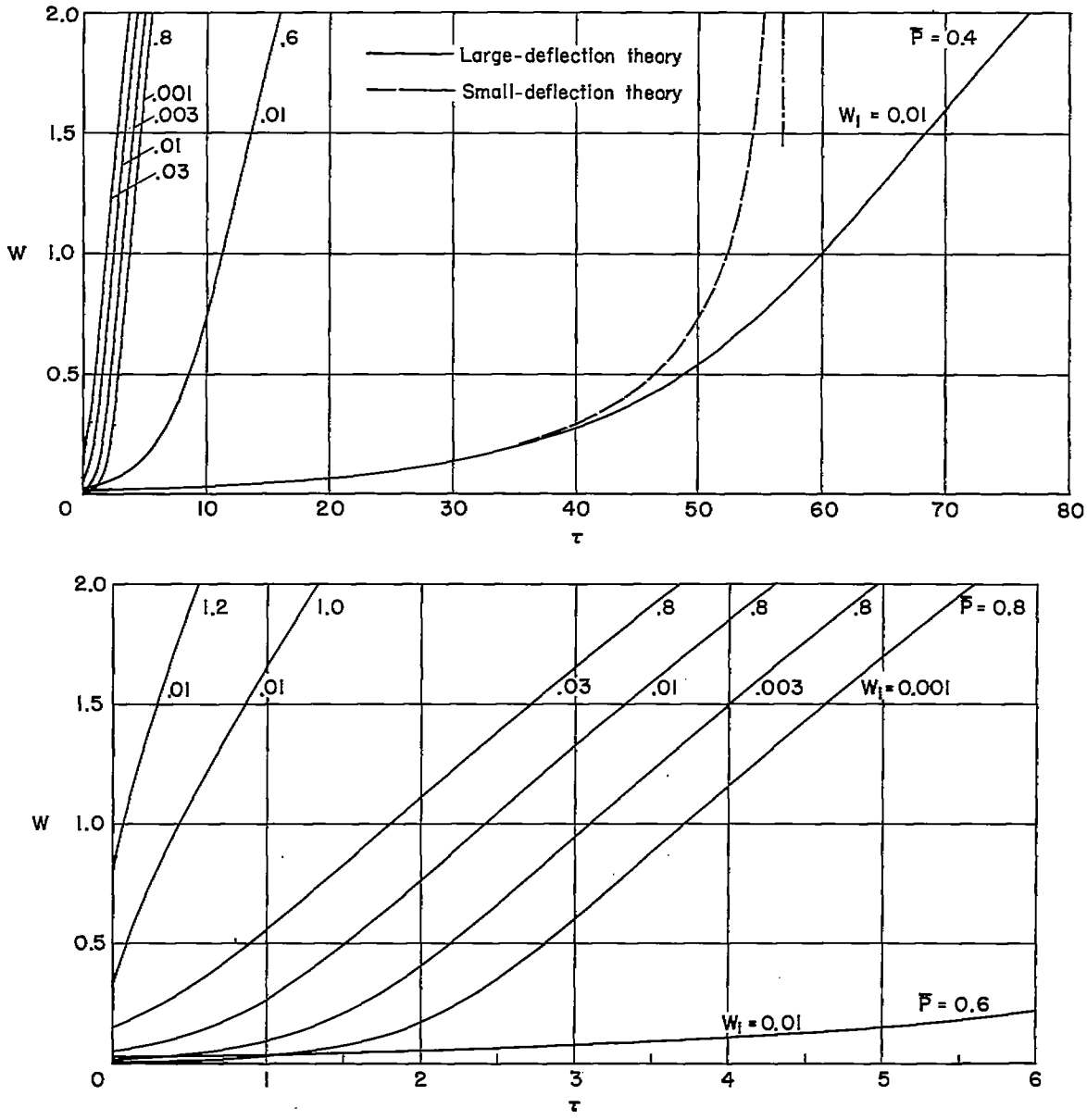

Figure 3.- History of lateral deflection at the center of a square plate made of a nonlinear material. $n = 1$; $\mu = 0.3$.

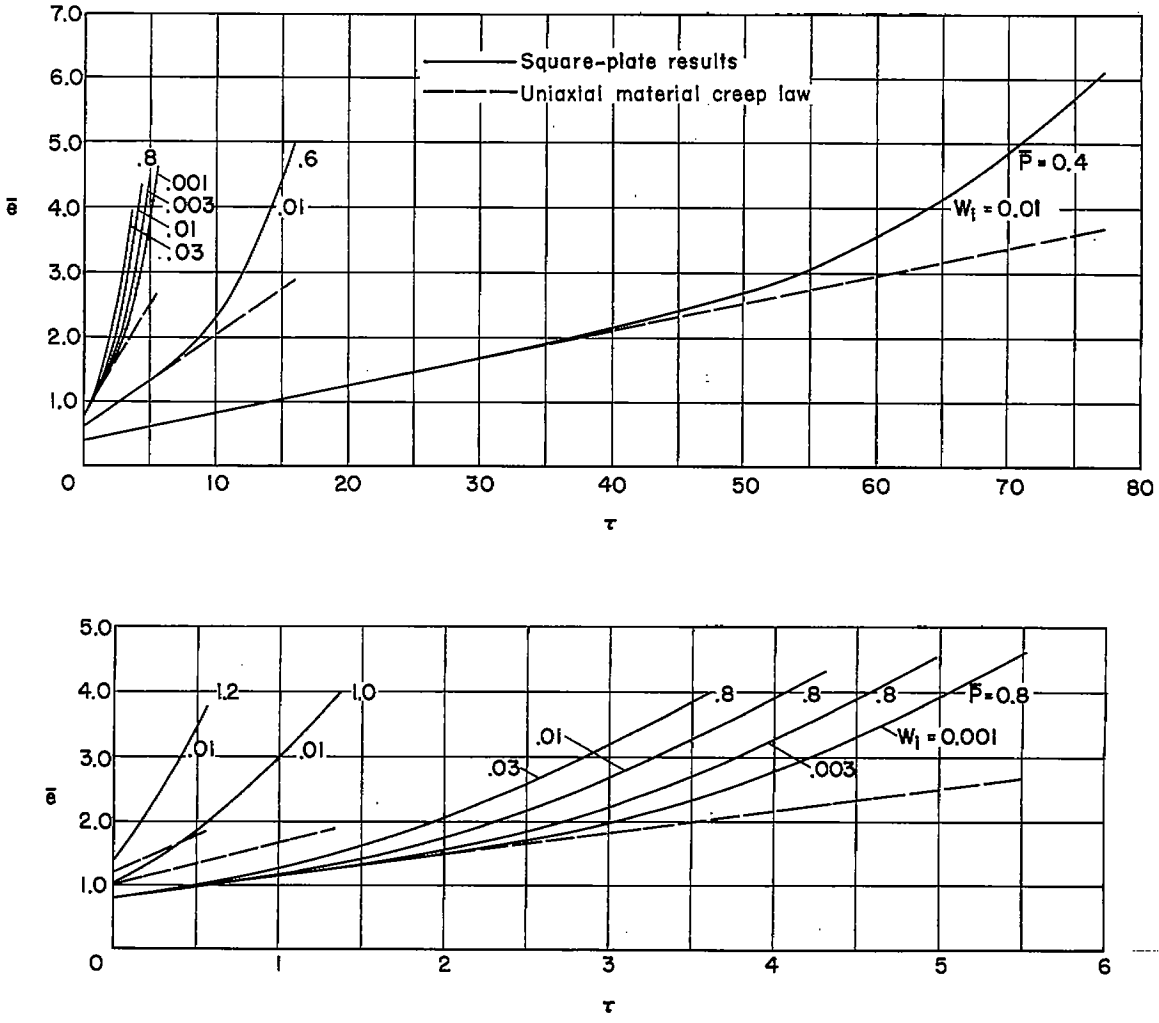

Figure 4.- History of unit shortening of square plate made of a nonlinear material. $n = 1$; $\mu = 0.3$.

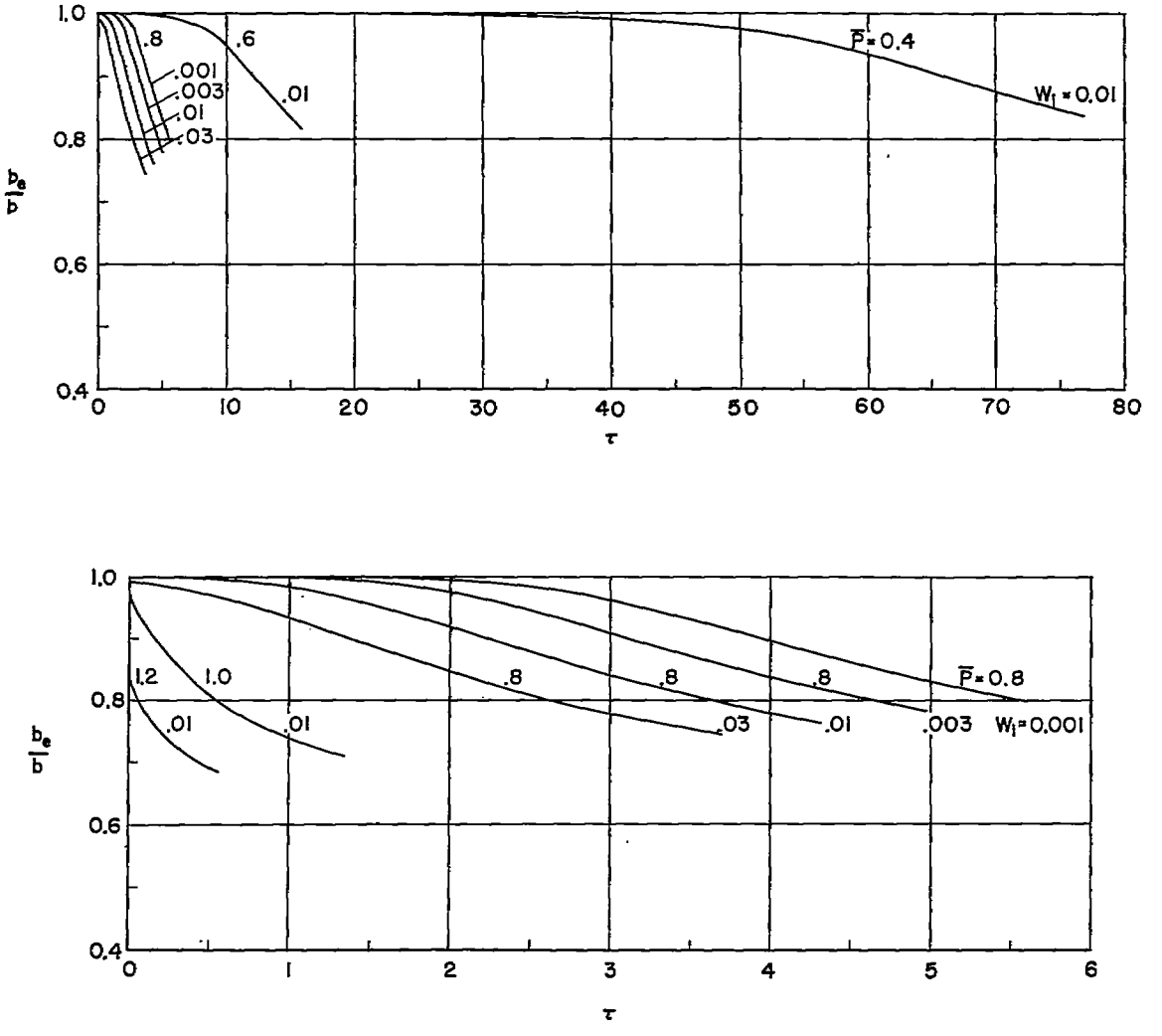

Figure 5.- History of effective width of square plate made of a nonlinear material. $n = 1$; $\mu = 0.3$.

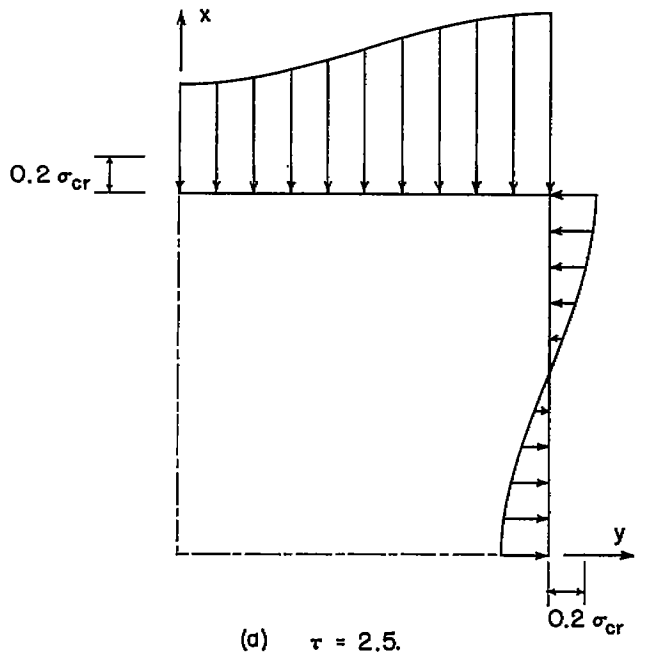

(a) $\tau = 2.5$.

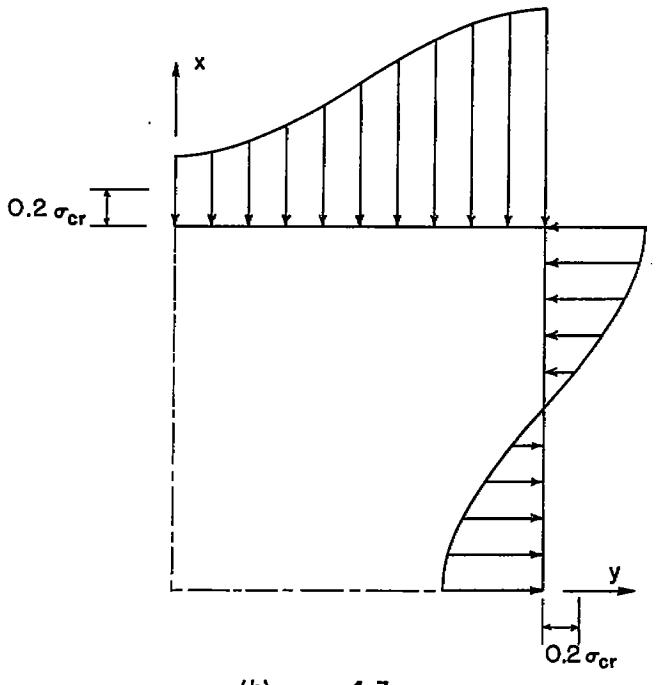

(b) $\tau = 4.3$.

Figure 6.- Stress distribution along the edges of first quadrant of square plate made of a nonlinear material. $\overline{P} = 0.8$; $W_i = 0.01$; $n = 1$; $\mu = 0.3$.