10751
NACA TN 4407

TECH LIBRARY KAFB, NM
0067185

NATIONAL ADVISORY COMMITTEE FOR AERONAUTICS

TECHNICAL NOTE 4407

EFFECTS OF GROUND PROXIMITY ON THE THRUST OF A SIMPLE DOWNWARD-DIRECTED JET BENEATH A FLAT SURFACE

By Kenneth P. Spreemann and Irving R. Sherman

Langley Aeronautical Laboratory
Langley Field, Va.

Washington
September 1958

AFMDC
TECHNICAL LIBRARY
AFL 2811

TECH LIBRARY KAFB, NM
0067185

X.

NATIONAL ADVISORY COMMITTEE FOR AERONAUTICS

TECHNICAL NOTE 4407

EFFECTS OF GROUND PROXIMITY ON THE THRUST OF A SIMPLE DOWNWARD-DIRECTED JET BENEATH A FLAT SURFACE

By Kenneth P. Spreemann and Irving R. Sherman

SUMMARY

An investigation to determine the effects of some of the basic parameters on the thrust of a simple downward-directed jet beneath a flat plate has been conducted in a static-thrust facility at the Langley Aeronautical Laboratory. Some of the principal variables investigated were size and shape of the flat plate, aspect ratio of the plate, distance of the flat plate and nozzle exit above the ground, and surface conditions of the ground.

Reductions in the ratio of plate area to jet area greatly lowered the height above the ground where serious adverse ground effects were encountered. Changes in plate aspect ratio from 1 to 3 appeared to have little effect on the induced negative thrust in close proximity to the ground, but at 3 and above significant reductions in the negative thrust were obtained. Extending the nozzle below the flat plate had little effect on the induced negative thrust at a given height of the flat plate above the ground.

Of the various devices employed to reduce the adverse ground effects only a perforated plate, raised slightly above the ground to provide a new take-off and landing surface, was effective in minimizing the induced negative thrust near the ground. The pressure ratio in the nozzle had very little effect on the ratio of jet thrust in ground proximity to jet thrust out of ground proximity for heights above the ground of more than 3 nozzle diameters. Very near the ground (within 1 nozzle diameter) with one of the smaller plates investigated, increases in nozzle pressure greatly reduced the losses in thrust.

INTRODUCTION

The Langley 7- by 10-Foot Tunnels Branch is investigating various methods of achieving vertical take-off and landing. One relatively simple means of obtaining vertical take-off and landing is by a circular jet directed vertically downward. It is well known that when a flat

plate with a perpendicular jet of fluid emitting from its center is brought into close proximity with a parallel plate the two plates are drawn together with a force exceeding the thrust of the jet. Simple devices of this nature are used to demonstrate Bernoulli's principle. This phenomenon would be expected to cause some configurations of jet vertical take-off and landing aircraft to lose lift when hovering near the ground. The results of an investigation of a shrouded propeller submerged in a wing, reported in reference 1, indicate losses in lift of this nature in close proximity to the ground.

The present investigation was undertaken to study the ground effects on a simple jet exhausting beneath a flat surface. In most cases flat plates were utilized to simulate the surfaces; however, in one test a model of a typical fighter aircraft was employed. Included in this investigation was a study of the effects of such parameters as the ratio of flat-plate area to nozzle area, flat-plate shape and aspect ratio, height of the plate and nozzle exit above the ground, and jet pressure ratio. Also investigated were the effects of ground surface condition and the effect of a porous surface located between the nozzle and the ground. As an aid in interpreting the results, pressure distributions were measured on the lower surface of two of the flat plates employed in this investigation.

SYMBOLS

The positive sense of thrust used in this paper is indicated in figure 1.

A_j jet-flow area, sq in.

A_p area of plate or model, sq in.

b span, in.

c chord, in.

$\bar{c}$ mean aerodynamic chord, in.

D outside diameter of nozzle, 1.0 in.

h height of flat plate or model above landing surface, in.

p atmospheric pressure, lb/sq in. abs

p_p plenum-chamber total pressure, lb/sq in. abs

$p_{p,\infty}$ plenum-chamber total pressure out of ground effect, lb/sq in. abs

Δp negative induced pressure on lower surface of plate, lb/sq in.

$q = p_p - p$, lb/sq in.

T thrust from nozzle, lb

T_∞ thrust from nozzle measured out of ground effect, lb

x flat-plate distance above nozzle exit, in.

z distance between perforated plate and ground, in.

APPARATUS AND METHOD

A sketch of the setup for the nozzle, plates, ground board, and perforated plate is shown in figure 1. Drawings of the various models and devices are shown in figures 2 to 5 and photographs of a number of the models and test equipment are presented in figure 6. Flat plates of square, rectangular, and triangular shapes (fig. 2) ranging in area from 4 to 100 square inches were employed. Two fences, shown in figure 3, were used in a series of tests on the larger triangular plate. The airplane model shown in figure 4 had a total plan-form area of 36 square inches; this included wing, tail, and fuselage. The ratio of height of the plate above the ground to the outside diameter of the nozzle h/D was varied from as close as 0.25 to about 400. The latter value was considered to be out of ground effect. Shown in figure 5 are some of the modifications to the take-off and landing surface employed in the investigation.

Thrust from the nozzle and the negative thrust on the models were measured by means of a single Statham gage balance (see fig. 1) to which the plenum chamber supplying air to the nozzle was mounted. The nozzle extended through the centroid of the plates investigated. As shown in figure 4 the airplane model employed was mounted at the 0.27 wing-chord station in the plane of symmetry.

The ground was simulated by a sheet of plywood as shown in figure 6. The auxiliary take-off and landing surface (perforated plate) was about 40-percent porous. All tests were conducted with the nozzle perpendicular to the models as well as to the take-off and landing surface.

The plenum-chamber pressure was measured by means of a 1/16-inch tube inserted in the side of the plenum chamber. The mass flow through

the nozzle was maintained constant for each plenum-chamber total-pressure ratio employed by means of a standard sharp-edge-orifice flowmeter. Air at normal temperatures of 60° to 80° F was supplied through a $1\frac{1}{2}$- inch line at a pressure of 300 lb/sq in.

The investigation was conducted in a static-thrust facility in the Langley 7- by 10-Foot Tunnels Branch.

RESULTS AND DISCUSSION

The thrust changes caused by ground proximity for the various configurations investigated are presented in terms of the ground-proximity parameter h/D and the ratio of thrust within ground effects to thrust out of ground effects T/T_∞. Presented in figure 7 are the effects of ground proximity on the plenum-chamber total pressure $p_p/p_{p,\infty}$ with or without plates. Figures 8 and 9 show the effects of ground proximity on T/T_∞ and $\frac{T}{A_j(p_p - p)}$, respectively, of the nozzle alone for the three plenum-chamber pressure ratios $p_{p,\infty}/p$ employed in the investigation. Shown in figure 10 are the effects of changes in the plenum-chamber pressure ratio $p_{p,\infty}/p$ on T/T_∞ for two of the square plates tested. The thrust changes T/T_∞ caused by ground proximity for the various configurations investigated are presented in figures 11 to 18. The effects of height above the ground h/D on the negative induced pressures over the lower surface of two of the square plates employed are shown in figure 19. The variations of the thrust ratio T/T_∞ with the ratio of plate area to jet area A_p/A_j are presented in figure 20 for a range of heights above the ground. A summary of the changes in T/T_∞ with A_p/A_j in moving away from or toward the ground is given in figure 21 for the square plates utilized in this investigation.

Plenum-Chamber Pressure Effects

Plates off.- In the present investigation the mass flow was held constant for each pressure ratio as the height above the ground was varied. As a result the pressure in the plenum chamber increased when the nozzle was brought in very close proximity to the ground as shown in figure 7. These curves represent average values and are within ±1.0 percent of those obtained with the plain nozzle or with plates installed except at $h/D = 0.25$ where there were larger variations (about the order of ±5 to ±10 percent). With the nozzle alone the measured thrust increased when the nozzle was very close to the ground as

shown in figure 8. This result may at first appear to be in disagreement with the results from a plain nozzle reported in reference 2. However, when the results are nondimensionalized in the same manner as that used in reference 2 the present data also show a decrease in the parameter $T/A_j(p_p - p)$ close to the ground (fig. 9).

Plates on.- With plates installed on the nozzle, very large losses in thrust were experienced. In general, these effects were much larger than the effects of plenum-chamber pressure which are shown in figure 10 for two of the square plates tested. With the smaller plate $(A_p/A_j = 22.7)$, increases in the plenum-chamber total pressure $p_{p,\infty}/p$ provided sizable gains in T/T_∞ below $h/d \approx 1.0$, where large thrust losses were encountered. These gains diminished with increasing distance from the ground, so that at $h/D > 3.0$ there were no measurable differences in T/T_∞ attributable to the changes in plenum-chamber pressure ratio. (See fig. 10(a).) However, with a larger plate $(A_p/A_j = 91.0)$, the pressure effects appeared to be masked by the plate size and the results showed either a gain or reduction in the induced negative thrust dependent upon h/D. (See fig. 10(b).)

Except for figure 11, wherein data are presented for the three plenum-chamber pressure ratios discussed in this section, data for the remaining configurations are presented for only one pressure ratio, $p_{p,\infty}/p = 2.12$. This pressure ratio was selected because it approximates the pressure ratio of most current jet engines.

Effects of Plate Size and Shape

Effects of plate size on T/T_∞.- The curves of figure 11 indicate that reductions in the ratio of plate area to jet area greatly lowered the height above the ground where serious adverse ground effects were encountered. For example, at an area ratio A_p/A_j of 5.7 (smallest plate) a height above the ground of about 1 diameter gave the same thrust loss (6 percent) as that obtained at $6\frac{1}{2}$ diameters with an area ratio of 142.0 (largest plate) for a plenum-chamber pressure ratio of 1.45 (fig. 11(a)). At pressure ratios of 2.12 and 2.70 the h/D values for a thrust loss of 6 percent were 0.5 and 0.2, respectively (figs. 11(b) and 11(c)) for the smallest plate, but little change was apparent in the h/D values for the largest plate. With h/D held constant, the results are even more impressive. In figure 11(a) it is seen that at $h/D = 1.0$ and $p_{p,\infty}/p = 1.45$, the smallest plate gave a loss in T/T_∞ of about 6 percent; whereas, with the next-size plate $(A_p/A_j = 22.7)$ the loss in T/T_∞ was about 35 percent. Similar large losses in the

ratio of thrust in ground effects to thrust out of ground effects can be observed for the other two plenum-chamber pressure ratios investigated.

Effects of aspect ratio on T/T_∞.- Shown in figure 12 are the effects on T/T_∞ of changes in the aspect ratios of rectangular plates compared with effects of square plates of equal area. From figure 12 it is seen that with a rectangular plate of aspect ratio 6.25 the induced negative thrust near the ground was noticeably less than that for the square plate. For example, at $h/D = 2$, T/T_∞ was decreased about 4 to 5 percent less than it was for the square plate of equivalent area. However, at a lower aspect ratio (about 2.8) these reductions dissappeared above $h/D = 2$ and at yet a lower aspect ratio (about 1.6) there was no measurable difference in T/T_∞ within the range of heights above the ground investigated. These effects could be expected since, with the higher aspect ratios, there is less inboard area where the pressures causing these thrust losses are highest. These effects will be discussed subsequently.

Effects of model shape on T/T_∞.- It was believed to be of interest to record the effects on T/T_∞ of an actual airplane model and to compare the results with those of the various flat plates employed. A fighter-type-airplane model (with a plan-form area almost equal to those of two of the flat plates) was used for this purpose. These data are presented in figure 17 and indicate that, on the plain take-off and landing surface, near the ground (h/D from 3.0 to 1.5) the airplane model gave about 5 to 8 percent less induced negative thrust than did a rectangular or a triangular plate of the same area. It can also be noted that as the ground is approached very closely (h/D values from 1.5 to 0.5), the triangular plate gave 10 to 40 percent more induced negative thrust than the rectangular plate.

Tuft and Pressure Studies of Jet Flow

Tuft studies.- Since the data of the basic configurations (figs. 11 and 12) indicated that plate size, aspect ratio, and height above the ground have large influences on T/T_∞, it was believed that a short study of the jet flow involved would be desirable. Accordingly, limited studies were made with a tufted probe. The flow between one of the smaller plates $(A_p/A_j = 51.0)$ and the ground in close proximity $(h/D = 1.0)$ is shown in the following sketch:

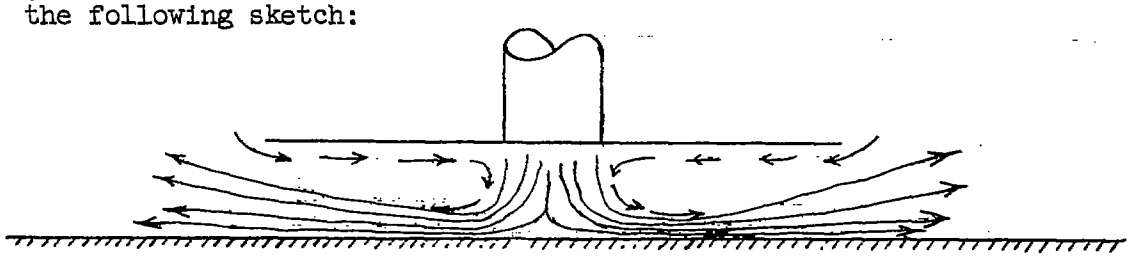

It appears from these tuft studies that with this smaller plate at this height above the ground, the deflected jet stream expanding along the ground entrained the ambient air as it flowed radially outward. This outward flow reduced the pressure under the plate, inducing the down loads experienced and also causing a pronounced inflow along the lower surface of the plate.

As the plate and nozzle were lowered a condition was reached in which the upper limit of the expanding outward flow along the ground reached the edge of the plate. When this condition existed, it appeared that the outside air was no longer entrained and a trapped "doughnut" shaped vortex was formed under the plate for this height and at all smaller distances above the ground. The flow in cross section at $h/D = 0.5$ appeared to be basically as shown in the following sketch:

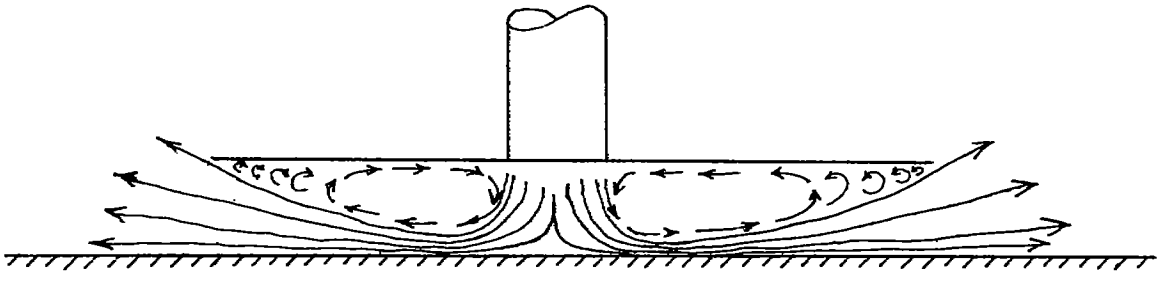

The height above the ground at which the trapped vortex-ring condition was reached depended primarily upon the size of the plate. The tuft studies under the largest square plate $(A_p/A_j = 142.0)$ indicated jet-flow characteristics at $h/D = 1.0$ to be much the same as those illustrated in the sketch just presented at $h/D = 0.5$ for the smaller plate $(A_p/A_j = 51.0)$.

Pressure distribution.- In order to identify these flow characteristics further, static pressures were measured on the bottom of two of the plates investigated. These results are presented in figure 19 as the ratio of Δp, the negative pressure on the plate, to the dynamic pressure in the jet for different heights above the ground. As can be seen in figure 19(a) for a distance very close to the ground $(h/D = 0.5)$ large negative pressures were induced near the central section of the larger plate $(A_p/A_j = 142.0)$ while pressures near the edge of the plate were nearly ambient.

Moving away from the ground, at $h/D = 1.0$, these negative pressures are greatly reduced but the negative-pressure region spreads out toward the edges of the plate, until at greater heights these pressures become very low and fairly uniform along the entire plate. Pressures on the

smaller plate, presented in figure 19(b), show that the pressure-distribution shape along the lower surface practically duplicated that over the same area (i.e., within 3 inches of the nozzle center) as the larger plate.

Unfortunately, the plenum-chamber total pressure $p_{p,\infty}/p$ was not adjusted to any of the pressure ratios used for the force data. Thus, the pressure distribution over the plates cannot be compared directly with the force data of figure 11.

Effects of Various Devices to Minimize Ground Interference

In attempts to alleviate the adverse ground effects of the jet exhausted beneath the flat surfaces near the ground, various devices were employed. The data obtained from testing these devices are given in figures 13 to 18.

Effects of extending nozzle below plate.- The data of figure 13 show the results of extending the nozzle below the flat surface. It is seen that there was little effect on the induced negative thrust. Thus, it seems that the distance from the flat surface to the ground is the primary factor involved in the adverse ground effects generated by a single simple jet exhausted beneath a flat surface and perpendicular to the ground.

Effects of fences on plate.- It was hoped that an obstruction on the flat plate might disrupt the flow over the lower surface of the plate and thus reduce the induced negative thrust. Consequently, two fence arrangements (shown in fig. 3) were tested and the data obtained are presented in figure 14. These fences were detrimental rather than beneficial, causing an increase in the induced negative thrust. It may be that the flow on the plate, rather than being disturbed, was channeled out through the unfenced section, thus increasing the induced negative thrust on this area of the plate.

Effects of ground surface condition.- Since the fences on the plate were ineffective in reducing the adverse ground effects, it was thought that perhaps some alteration to the ground might accomplish this reduction. Therefore, concentric squares of tubing were installed on the ground. From figure 15 it is seen that there were some improvements, the smaller diameter tubing appearing to be slightly the better of the two sizes investigated.

Effects of a perforated surface on the ground.- It was felt that if the primary jet flow along the ground could be guided away from the plate reductions in the induced negative thrust might be realized. Such

a device could be a surface perforated to permit some of the high-energy air to pass through and be carried off between the ground and the new landing surface. Consequently, a perforated plate was installed on the ground (shown in fig. 6, porosity of about 40 percent) to provide a new take-off and landing surface slightly raised above the ground. Data for a small and a large triangular-shaped plate (area ratios A_p/A_j equal to 51.0 and 142.0, respectively) are presented in figure 16. It is apparent that with the perforated plate only 0.25 or 0.5 nozzle diameter above the ground there were sizable reductions in the induced negative lift. For example, if it is assumed that a 5-percent loss in T/T_∞ would be acceptable it can be observed in figure 16(a) that with the perforated plate 0.50 inch (or $z/D = 0.50$) above the landing surface an h/D value of about 1.2 would be required rather than one of about 3.5 without the perforated plate. From another viewpoint the results are even more impressive; for instance, at a constant h/D value of 0.8, the thrust ratio was raised from $T/T_\infty = 0$, a condition in which the induced negative thrust equaled the jet thrust out of ground effects, without the perforated plate to $T/T_\infty = 0.80$ with the perforated plate at $z/D = 0.5$. The fighter-airplane model previously mentioned was also tested with the perforated plate and these results are presented in figure 17. As low as $1\frac{1}{2}$ nozzle diameters above the ground the fighter model had no more than a 1- or 2-percent loss in T/T_∞ with the perforated plate 0.5 inch above the ground, but without the plate there was about a 25-percent loss in thrust.

It is believed that the principal effect of the perforated plate was to provide a barrier between the high-energy primary air from the jet which flowed out along the ground and the air that it attempted to entrain. The presence of the perforated plate minimized this entrainment and this in turn reduced the induced negative thrust. It should be noted that this was the only perforated plate tested; consequently, no special significance can be attached to the value of 40-percent porosity involved. The results indicate that possibly by investigating other plates of different porosity and perhaps with a higher pressure drop for airflow from one side to the other, some improvement over the results shown here might be obtained.

Effects of dams between ground and perforated plate.- In order to gain some idea of the effectiveness of the perforated plate under operating conditions to which it might be subjected, such as being placed over a depression or some obstruction between the ground and plate, a dam was placed between the ground and the perforated plate. Figure 18 shows the effects on T/T_∞ with height above the take-off and landing surface for two sizes of dams employed. It is apparent that the dams were detrimental to the effectiveness of the perforated plate, particularly at intermediate heights ($h/D = 1.0$ to 4.0).

Summary of Effects of Plate Size

The effects on T/T_∞ for various flat-plate sizes shown in figure 11 were plotted against the ratio of the area of the plates to the area of the jet A_p/A_j. These data are presented in figure 20. From this figure it is seen that there is an abrupt reduction in slope of the T/T_∞ curves with increases in area ratio very near the ground. Below $A_p/A_j \approx 4$ it appears that there would be little effect of area ratio on T/T_∞.

Shown in figure 21 is the parameter $\frac{\partial(T/T_\infty)}{\partial(A_p/A_j)}$ for the square plates. These slopes were taken below the abrupt reduction in slope of T/T_∞ indicated in figure 20. As would be expected, large losses in T/T_∞ with increases in A_p/A_j are evident near the ground. For example, for $A_p/A_j = 20$, an h/D value of 1.0, compared with an h/D value of ∞, the condition of no ground effects, would give a loss in thrust of about 36 percent. Attention should be called to the fact that these were square plates which are probably the most critical configurations investigated, so that changes in shape, particularly increases in aspect ratio, would reduce these losses in thrust.

CONCLUSIONS

An investigation to determine the effects of some of the basic parameters that can affect the thrust of a simple downward-directed jet beneath a flat plate indicates the following conclusions:

1. Reductions in the ratio of plate area to jet area greatly lowered the height above the ground where serious adverse ground effects were encountered. For example, at an area ratio of 5.7, the same loss in thrust was obtained at about $\frac{1}{2}$ to 1 nozzle diameter above the ground as was obtained at $6\frac{1}{2}$ diameters with a plate having an area ratio of 142.0.

2. Changes in plate aspect ratio from 1 to 3 appeared to have little effect on the induced negative thrust close to the ground, but at aspect ratios of 3 and above significant reductions in the negative thrust were obtained.

3. Extending the nozzle below the flat plate had little effect on the induced negative thrust at a given flat-plate height above the ground.

4. Of the various devices employed to reduce the adverse ground effects only a perforated plate raised slightly above the ground to provide a new take-off and landing surface was effective in minimizing the induced negative thrust near the ground.

5. The pressure ratio in the nozzle had very little effect on the ratio of jet thrust in ground proximity to jet thrust out of ground proximity for heights above the ground of more than 3 nozzle diameters. Very near the ground, within 1 nozzle diameter, with one of the smaller plates investigated, increases in nozzle pressure greatly reduced the losses in thrust.

Langley Aeronautical Laboratory,
National Advisory Committee for Aeronautics,
Langley Field, Va., September 9, 1958.

REFERENCES

1. Taylor, Robert T.: Experimental Investigation of the Effects of Some Shroud Design Variables on the Static Thrust Characteristics of a Small-Scale Shrouded Propeller Submerged in a Wing. NACA TN 4126, 1958.

2. Von Glahn, Uwe H.: Exploratory Study of Ground Proximity Effects on Thrust of Annular and Circular Nozzles. NACA TN 3982, 1957.

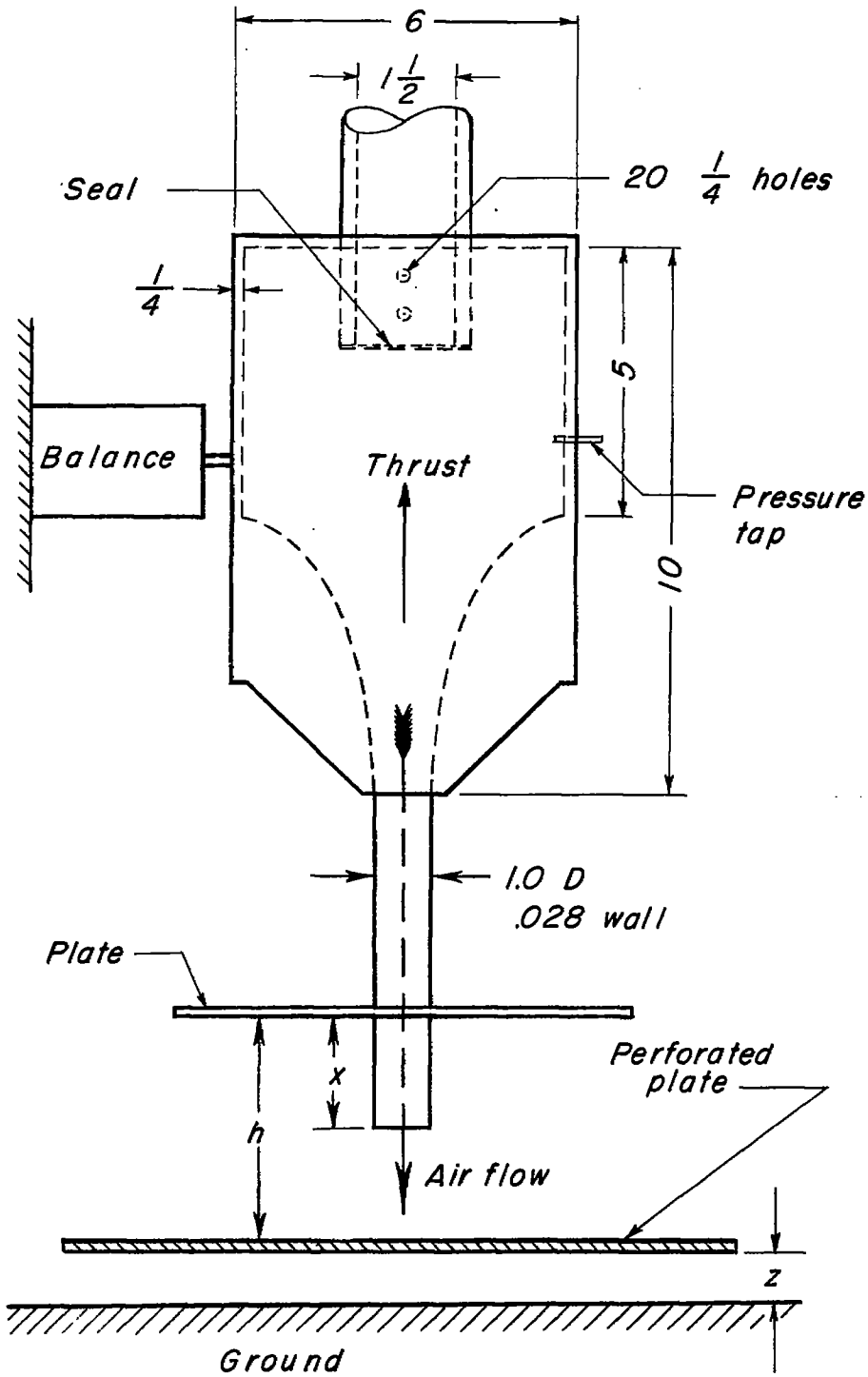

Figure 1.- Sketch of setup for nozzle, plates, and ground board. All dimensions are in inches.

Size Plates Employed				
Square	Rectangular		Triangular	
b	b	c	b	c
10	10	6.4	14.25	14.0
8	10	3.6	8.57	8.4
6	10	1.6		
4				
2				

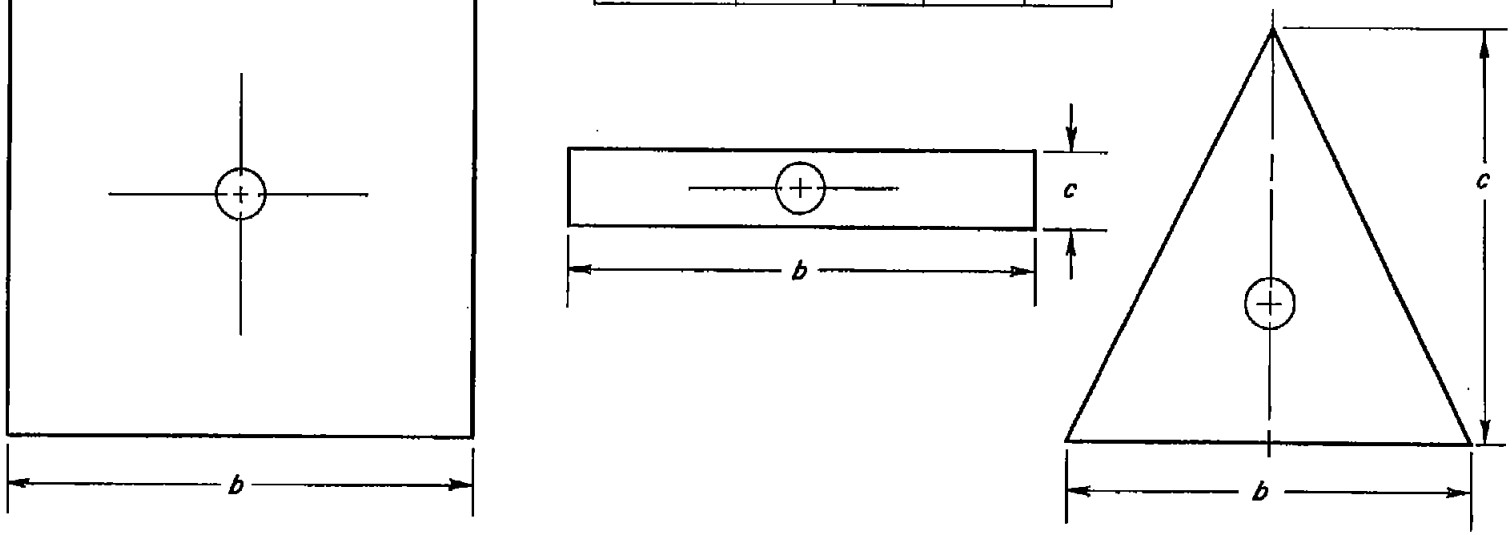

Figure 2.- Size and shape of different flat plates tested. All dimensions are in inches. (Plates are 1/8 inch thick.)

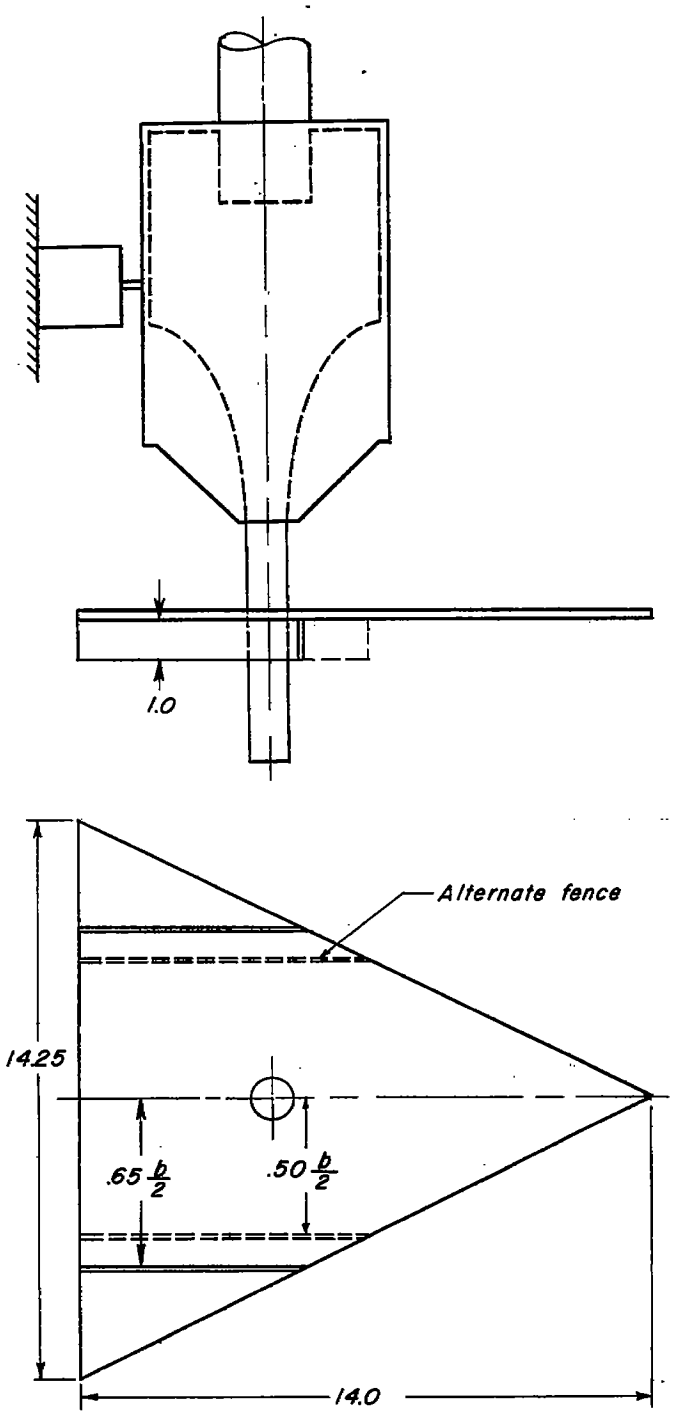

Figure 3.- Fence installations on large triangular plate. All dimensions are in inches.

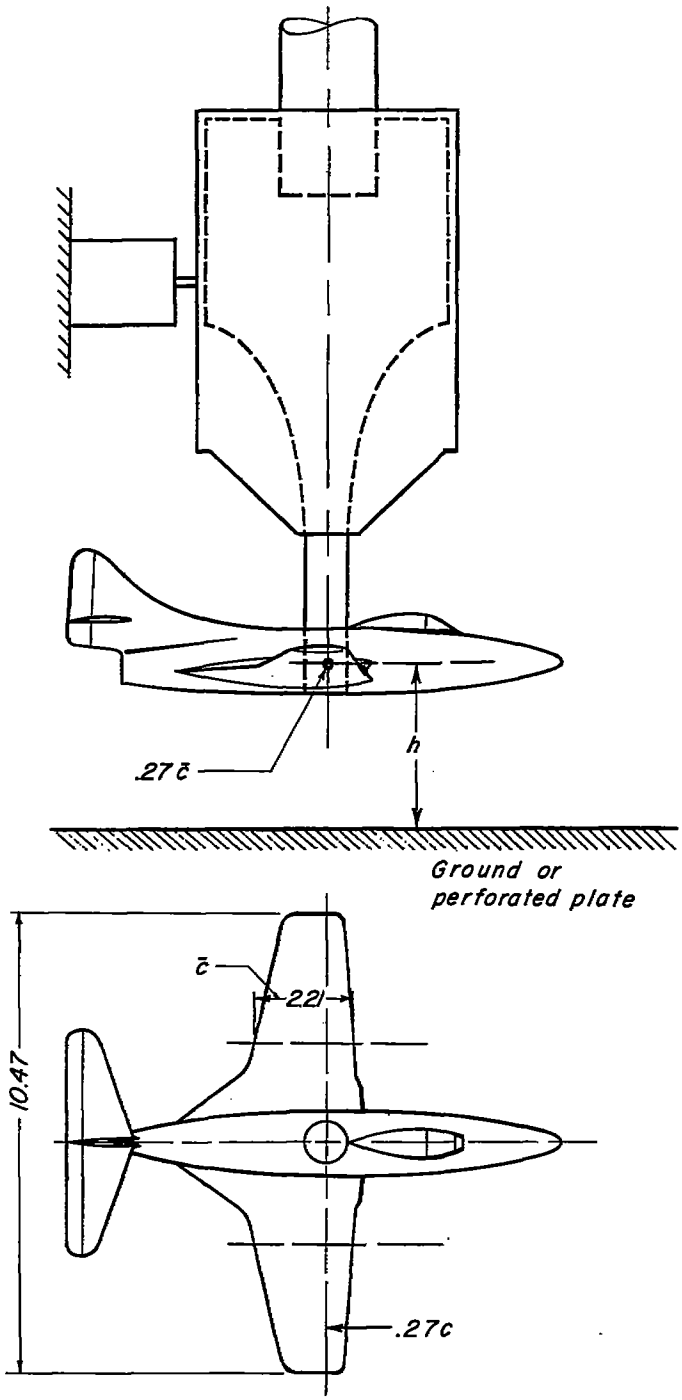

Figure 4.- Fighter-airplane-model installation. All dimensions are in inches.

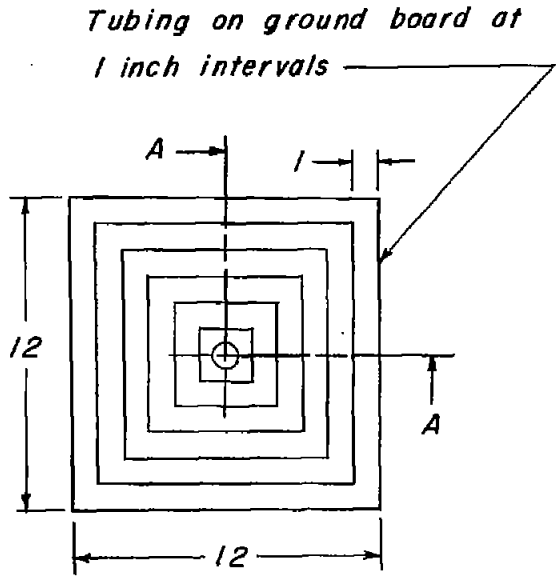

(a) Location of tubing on ground board.

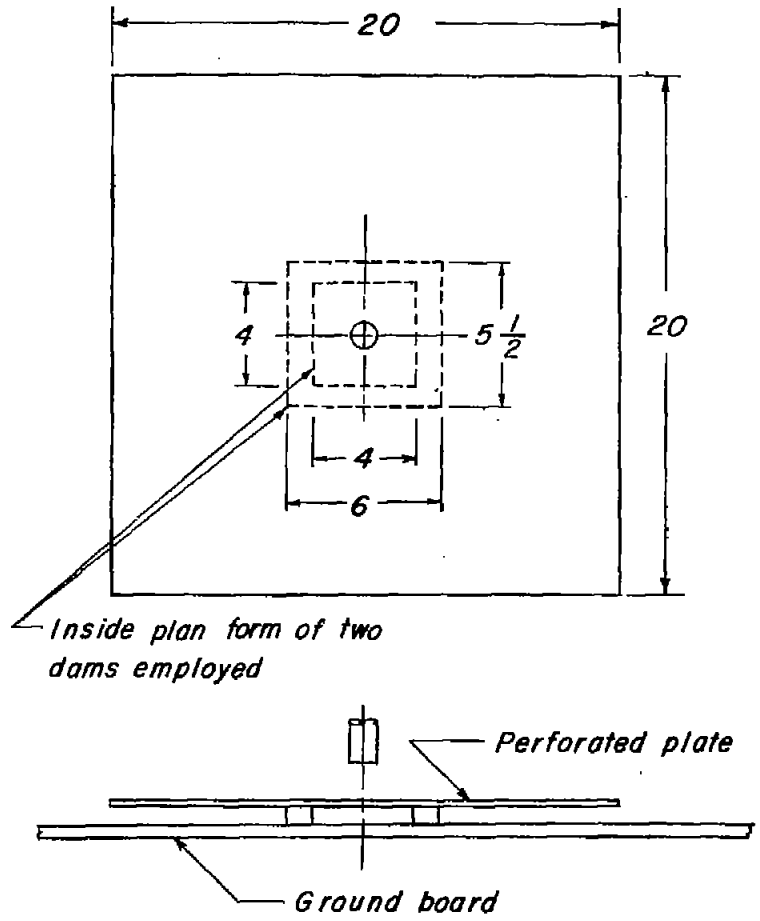

(b) Location of dam between ground board and perforated plate.

Figure 5.- Installation of tubing on ground board and dams between ground board and perforated plate. All dimensions are in inches.

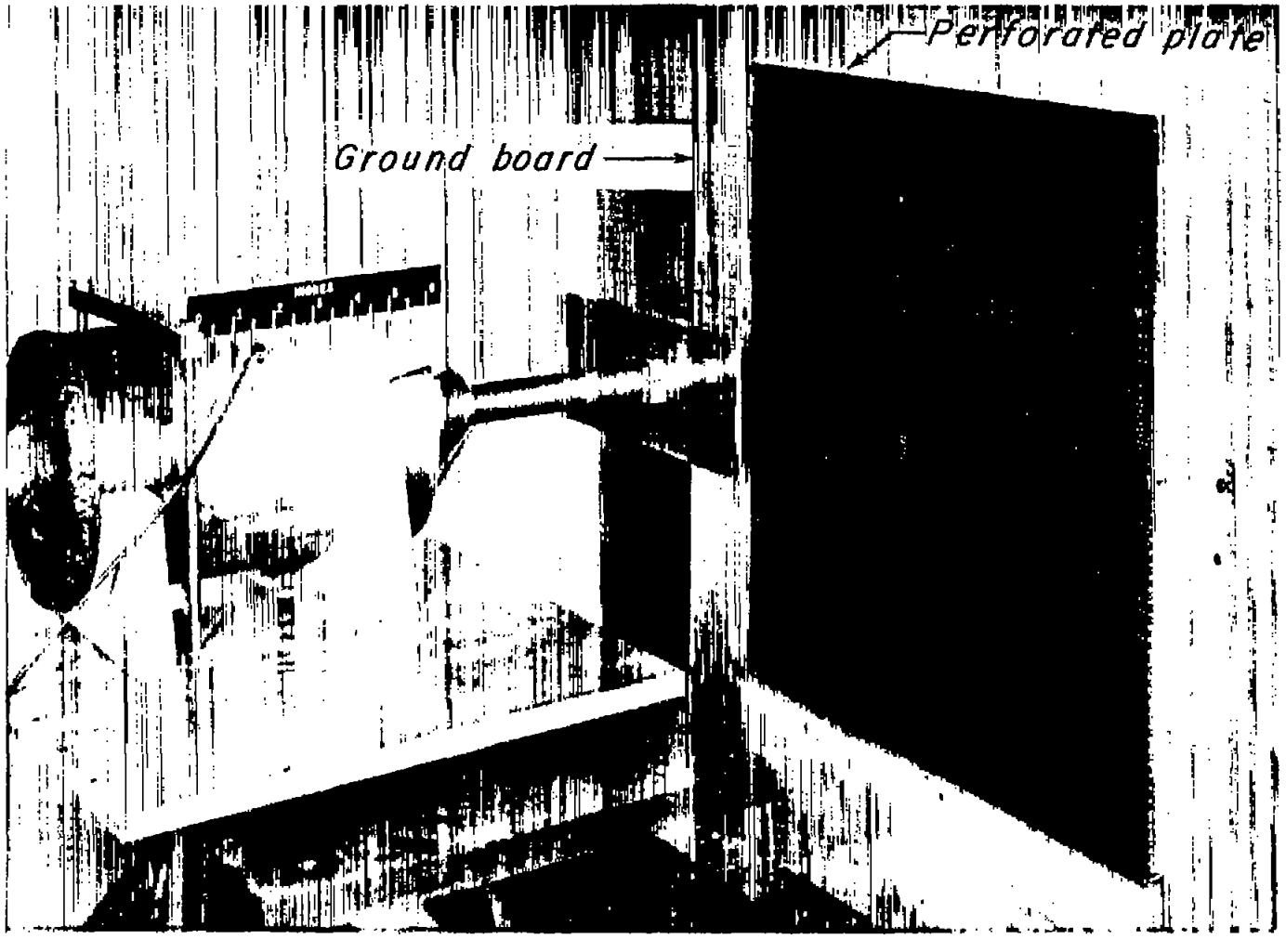

(a) Rectangular model. L-57-283.1

Figure 6.- Photographs of typical model installations with perforated plate installed.

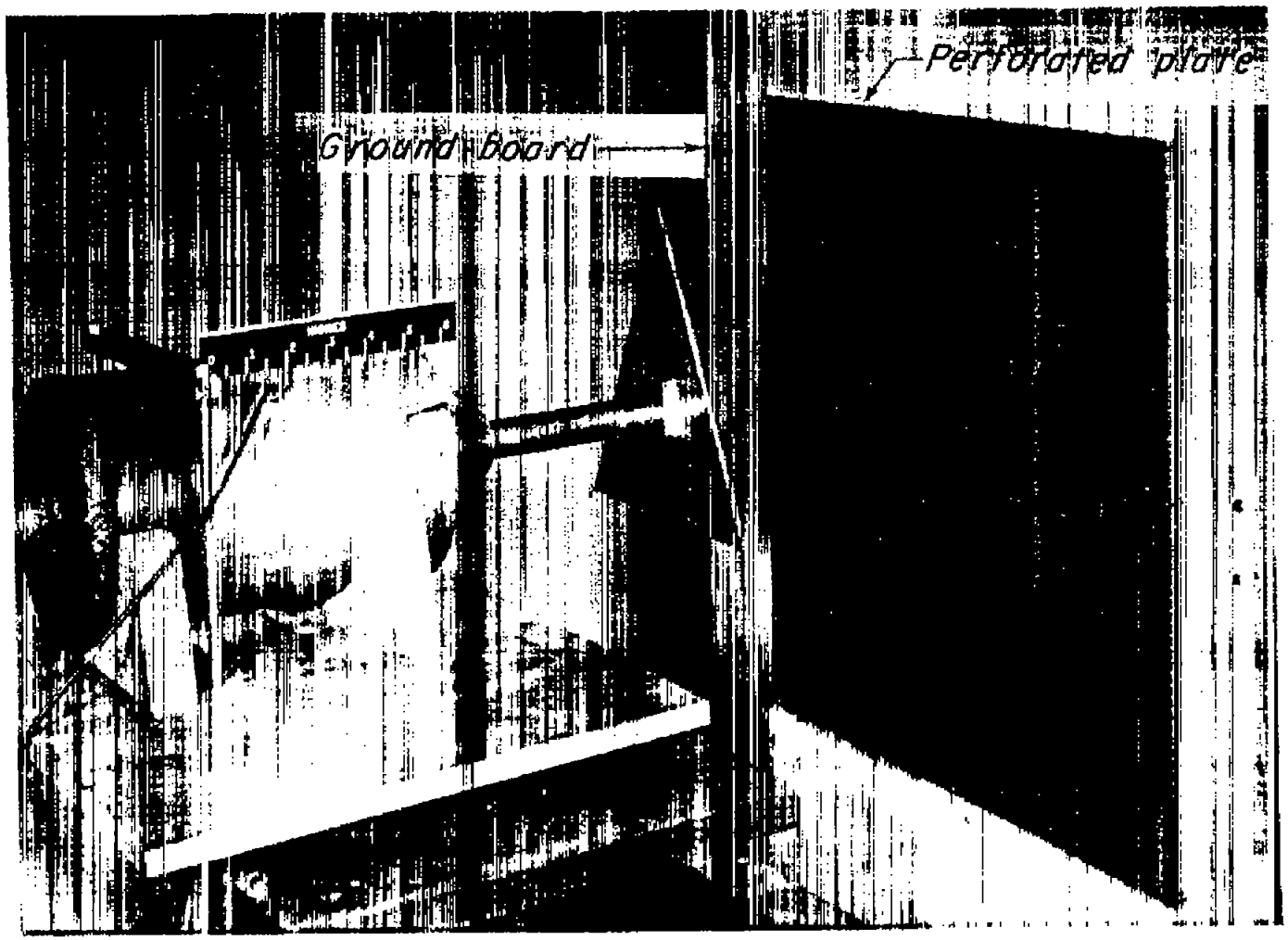

(b) Triangular model. L-57-284.1

Figure 6.- Continued.

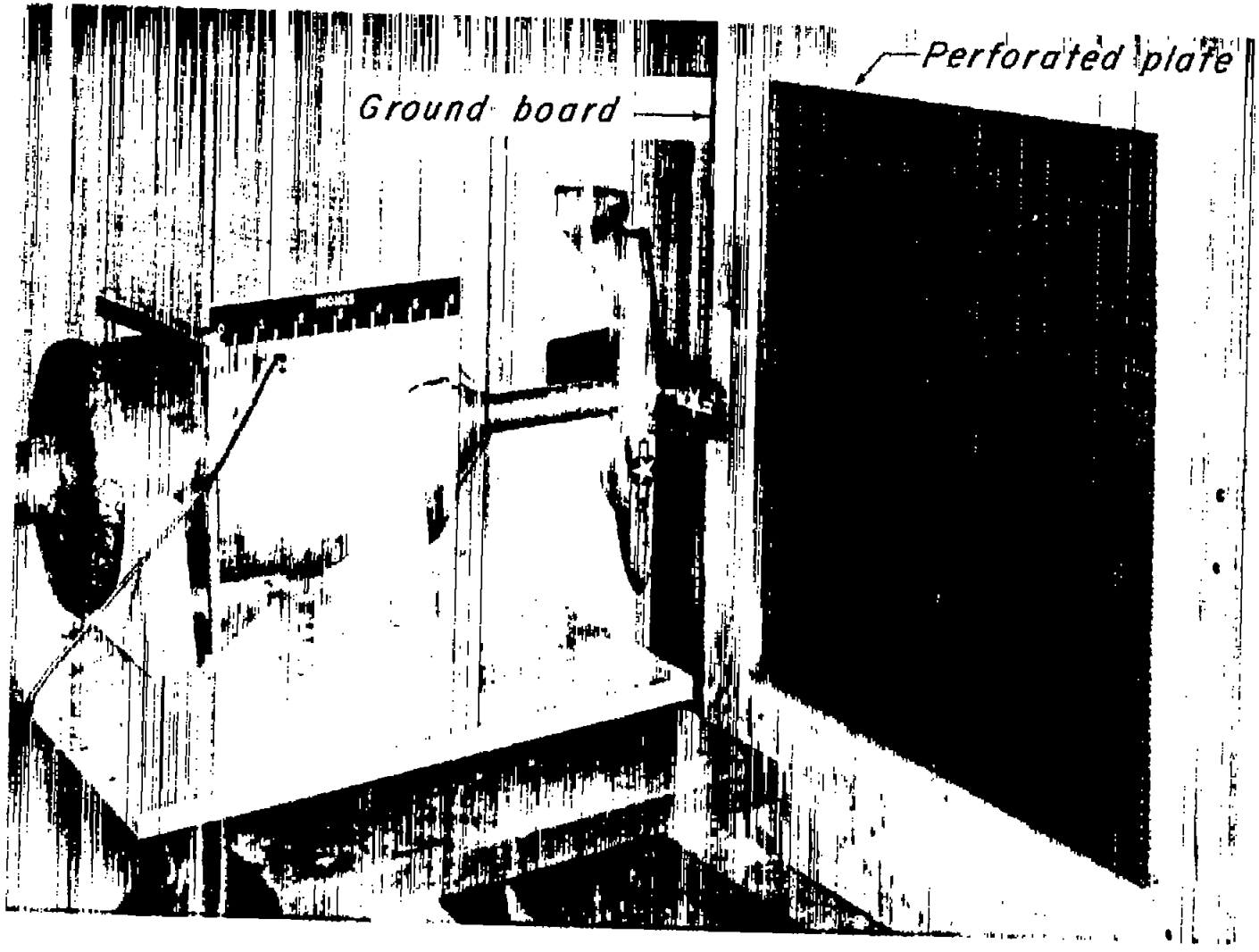

(c) Airplane model.

L-57-281.1

Figure 6.- Concluded.

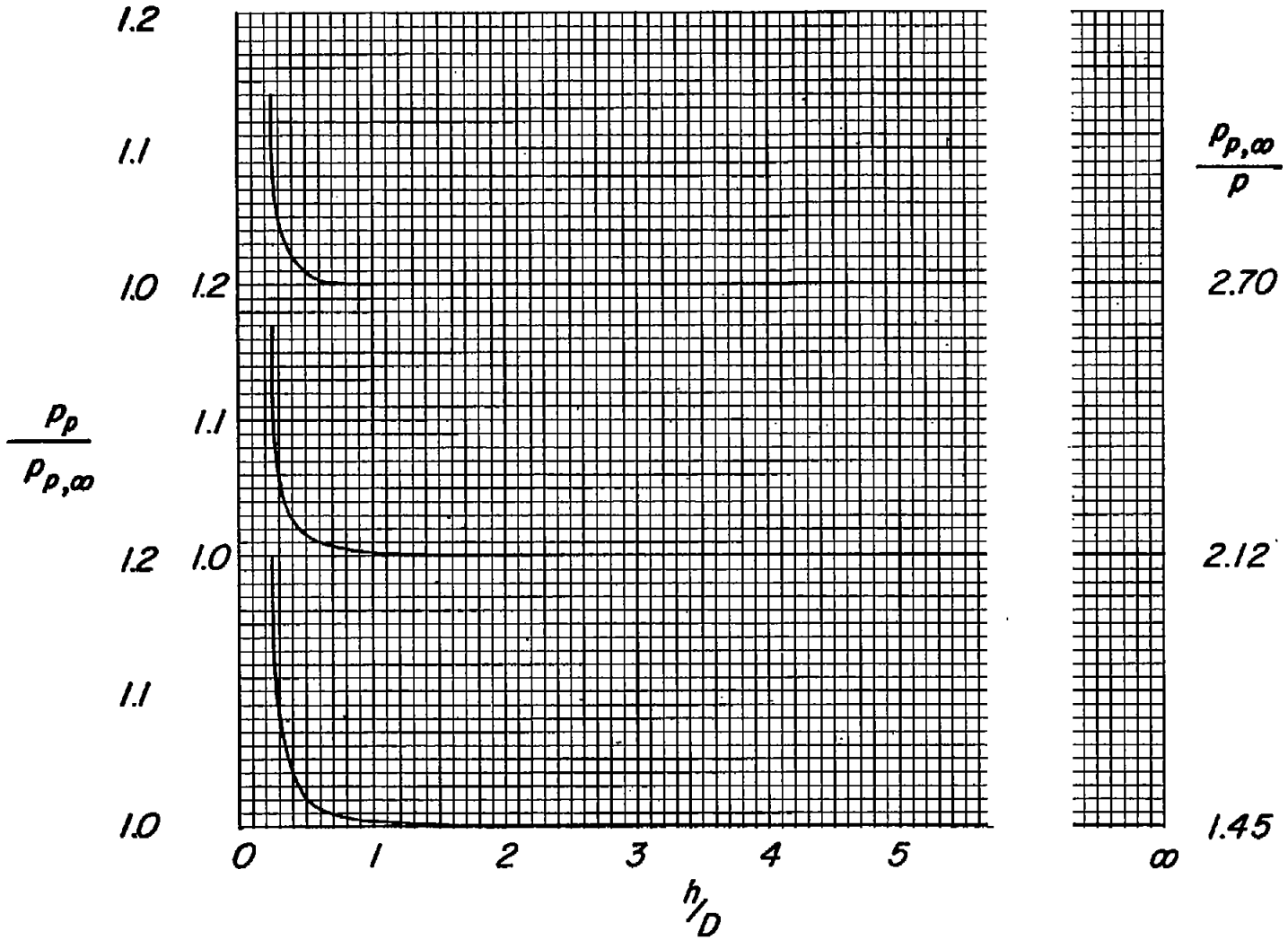

Figure 7.- Effect of height above the ground on plenum-chamber total pressure for three pressure ratios employed (with or without plates).

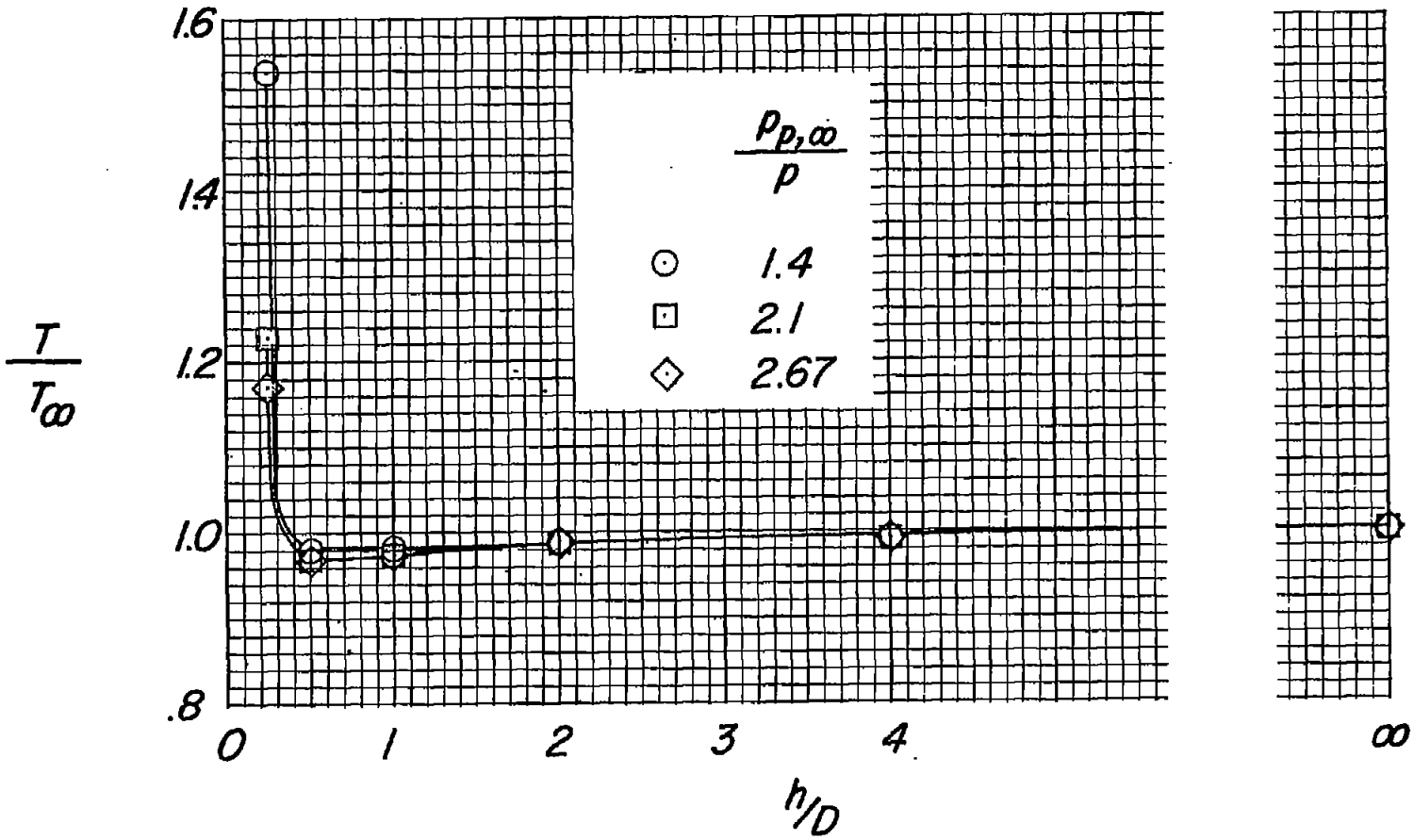

Figure 8.- Effect of ground proximity on thrust of nozzle alone for three plenum-chamber pressure ratios employed.

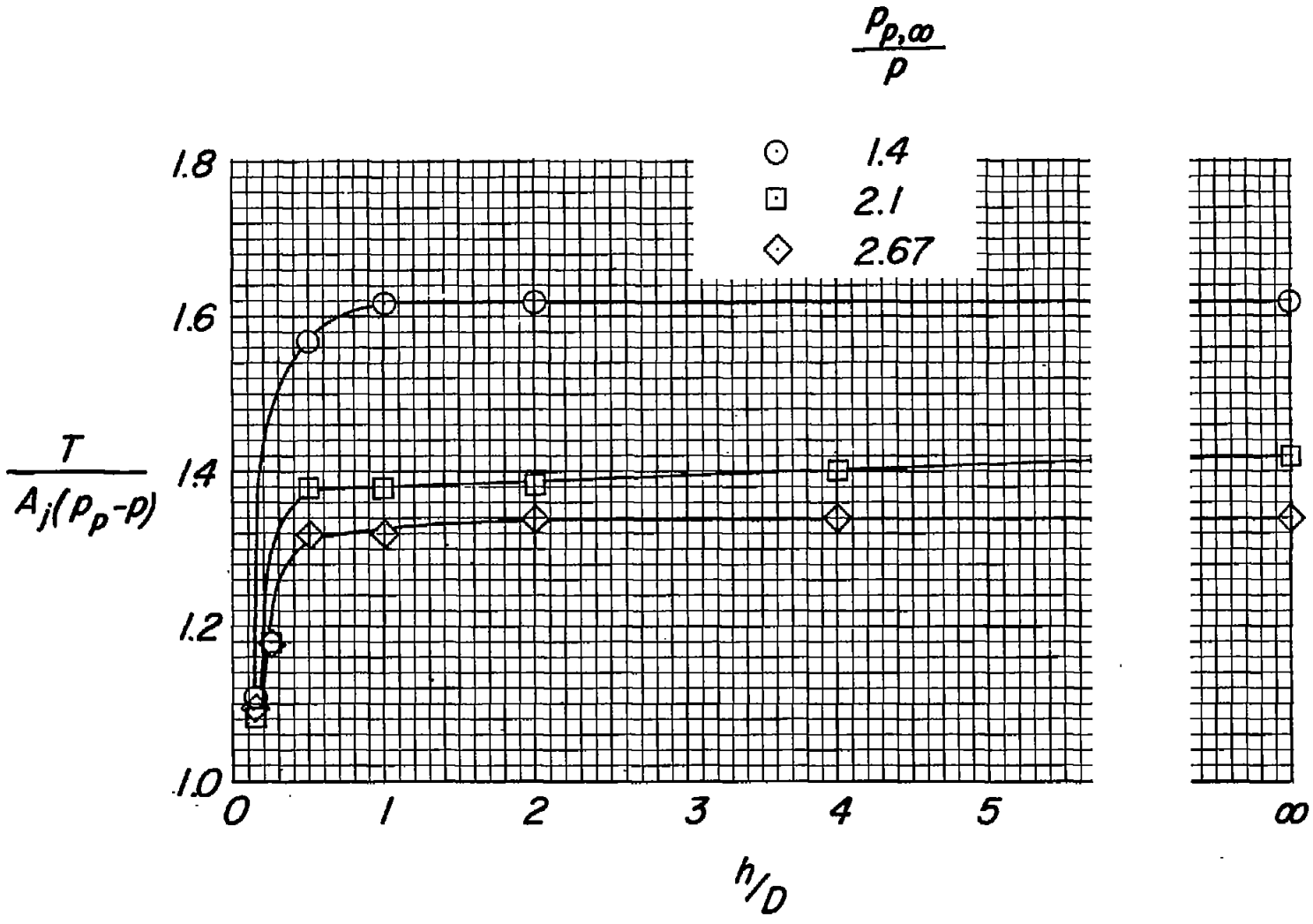

Figure 9.- Effect of ground proximity on thrust of nozzle nondimensionalized with respect to jet area and gage pressure.

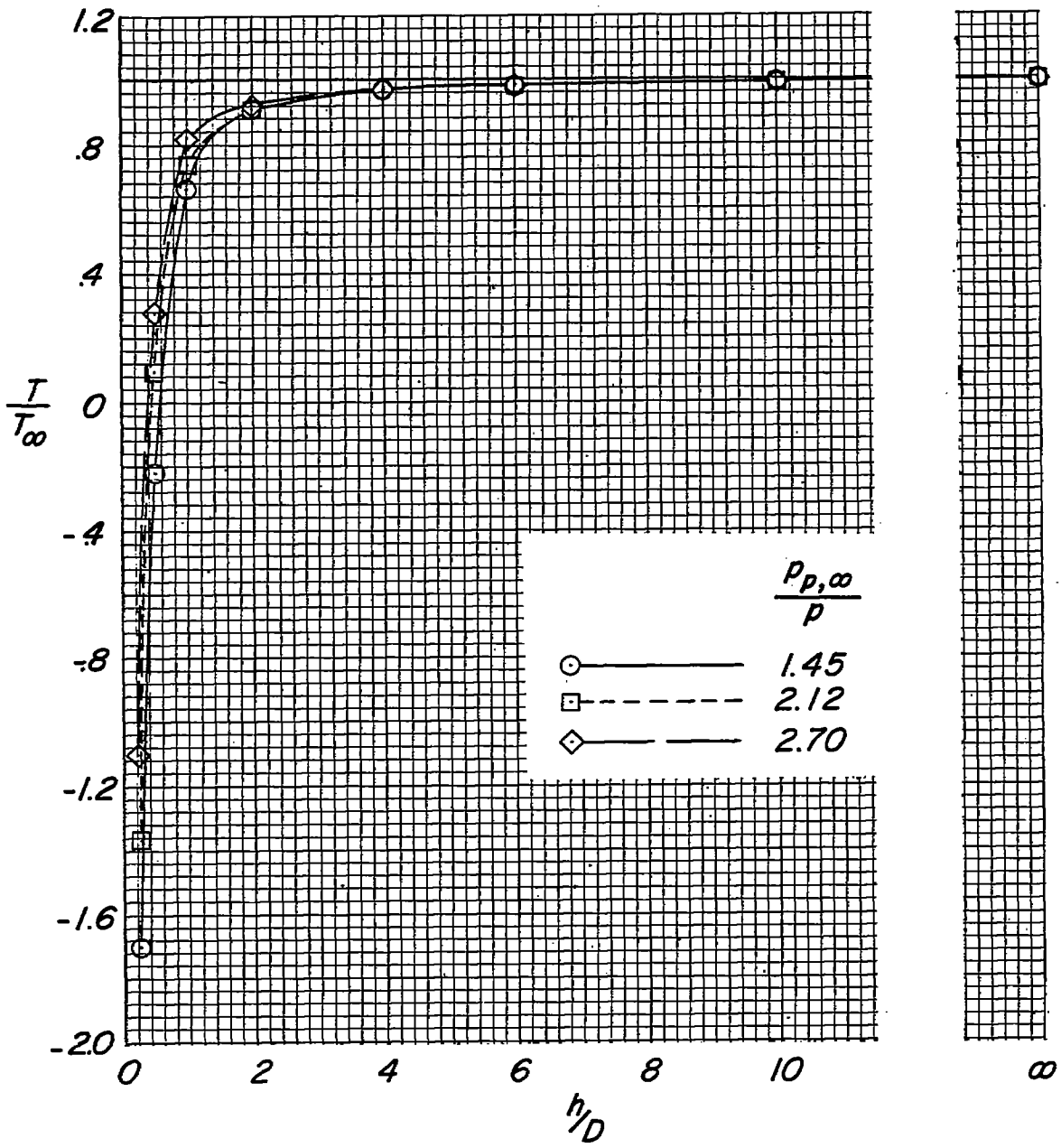

(a) $A_p/A_j = 22.7$.

Figure 10.- Effect of pressure ratio on T/T_∞ of two of the square plates employed. $x/D = 0$.

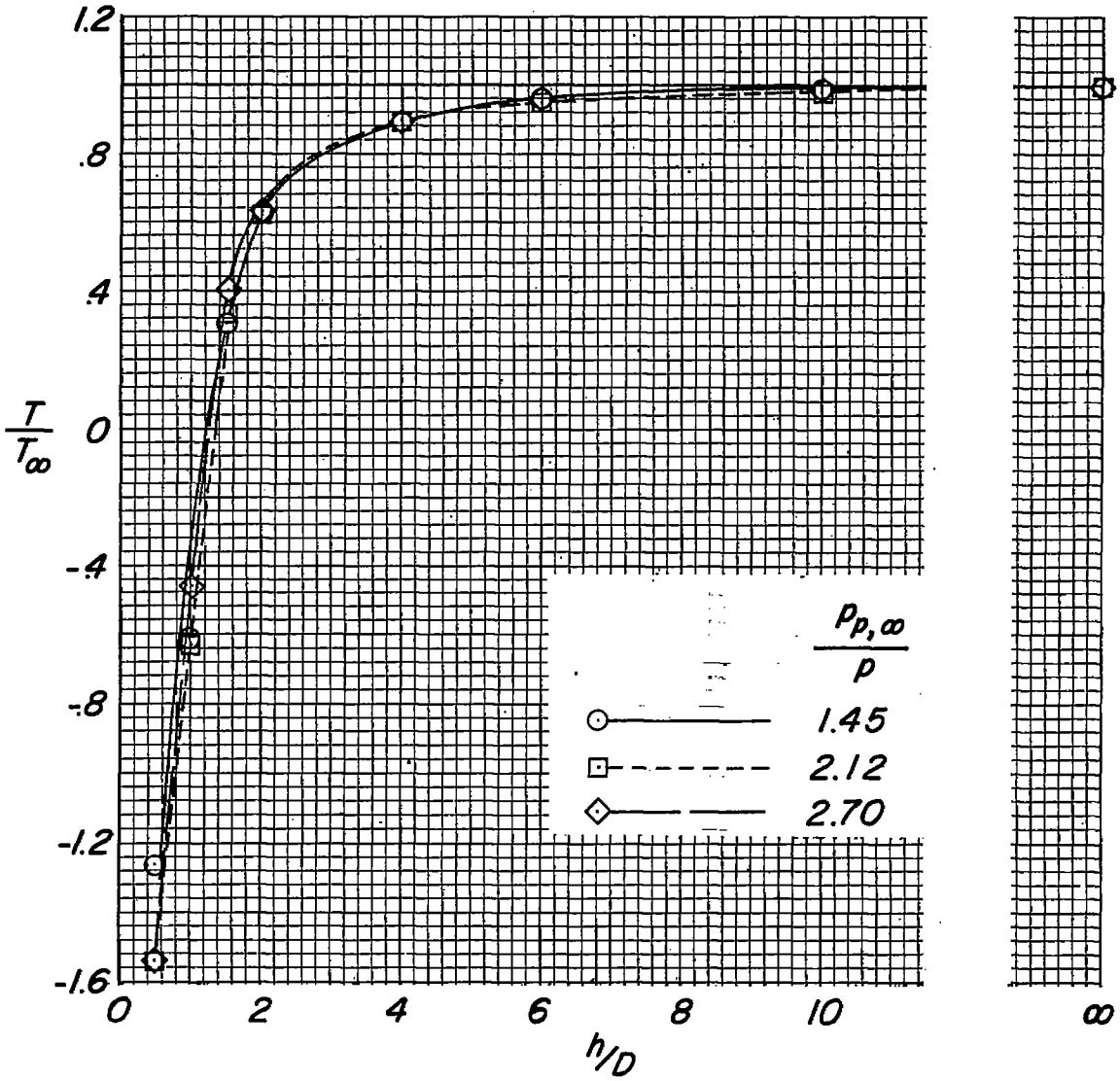

(b) $A_p/A_j = 91.0$.

Figure 10.- Concluded.

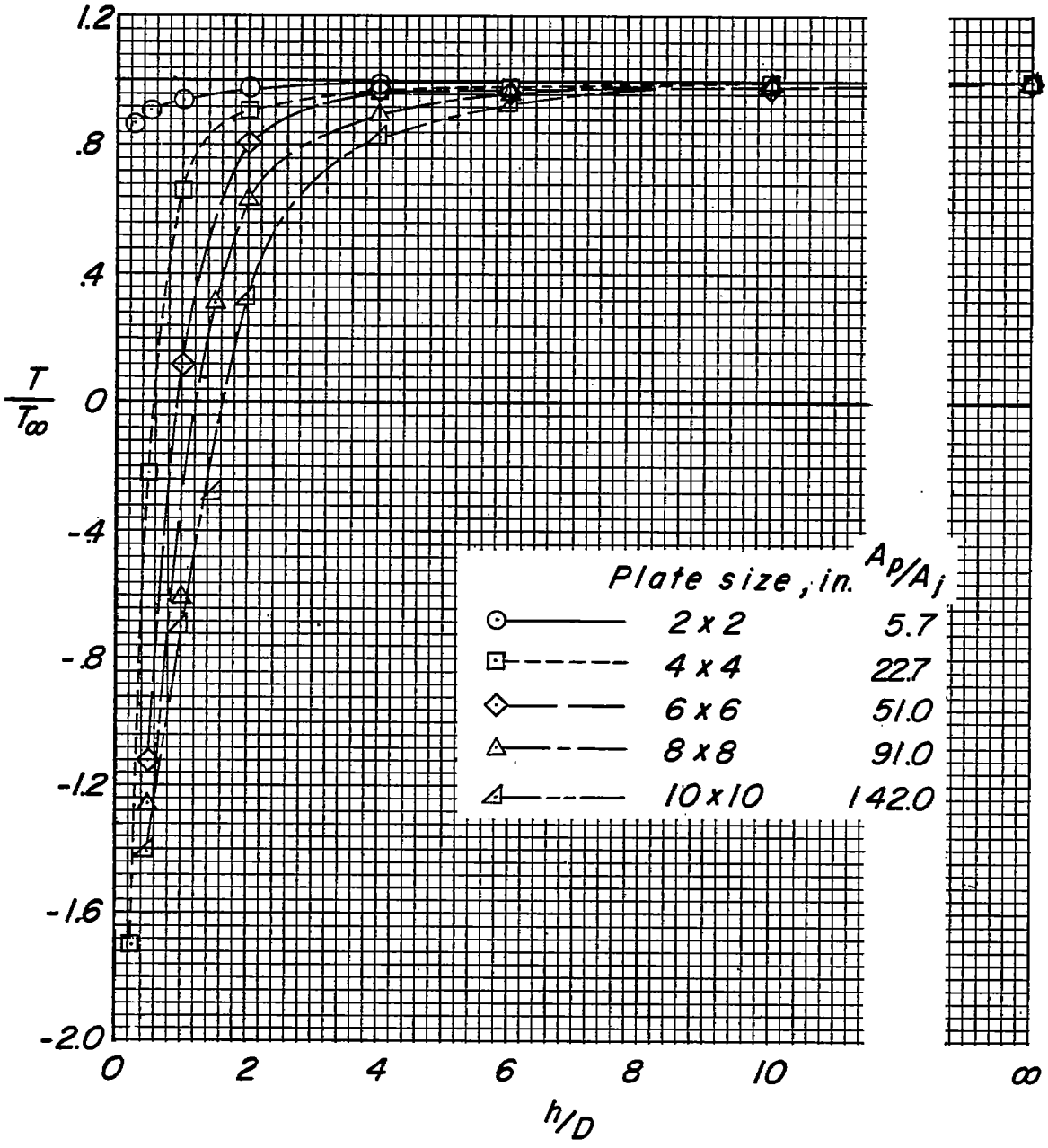

(a) $\frac{p_{p,\infty}}{p} = 1.45$.

Figure 11.- Effect of size of square plates and height above ground on T/T_∞. $x/D = 0$.

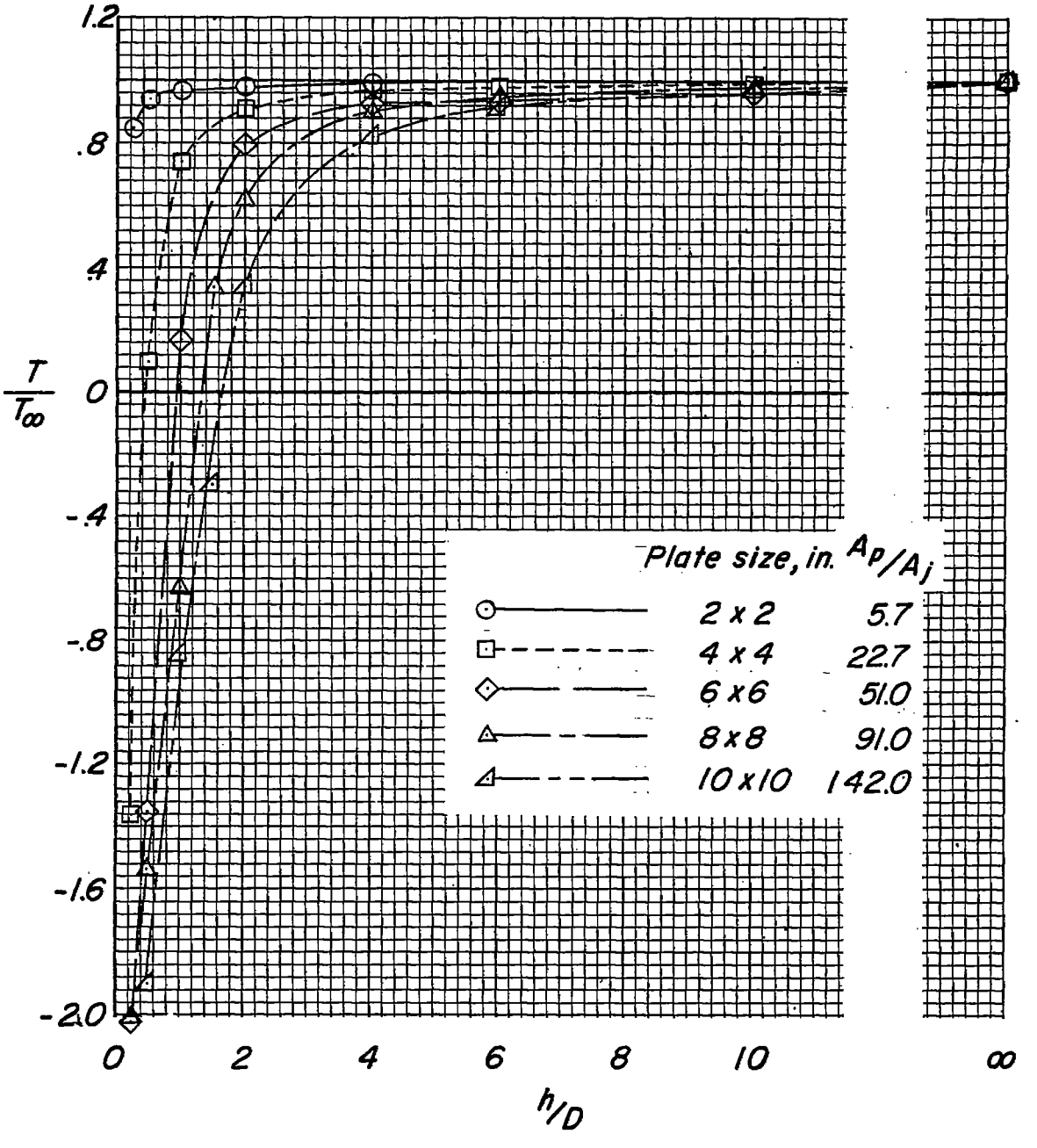

(b) $\frac{p_{p,\infty}}{p} = 2.12$.

Figure 11.- Continued.

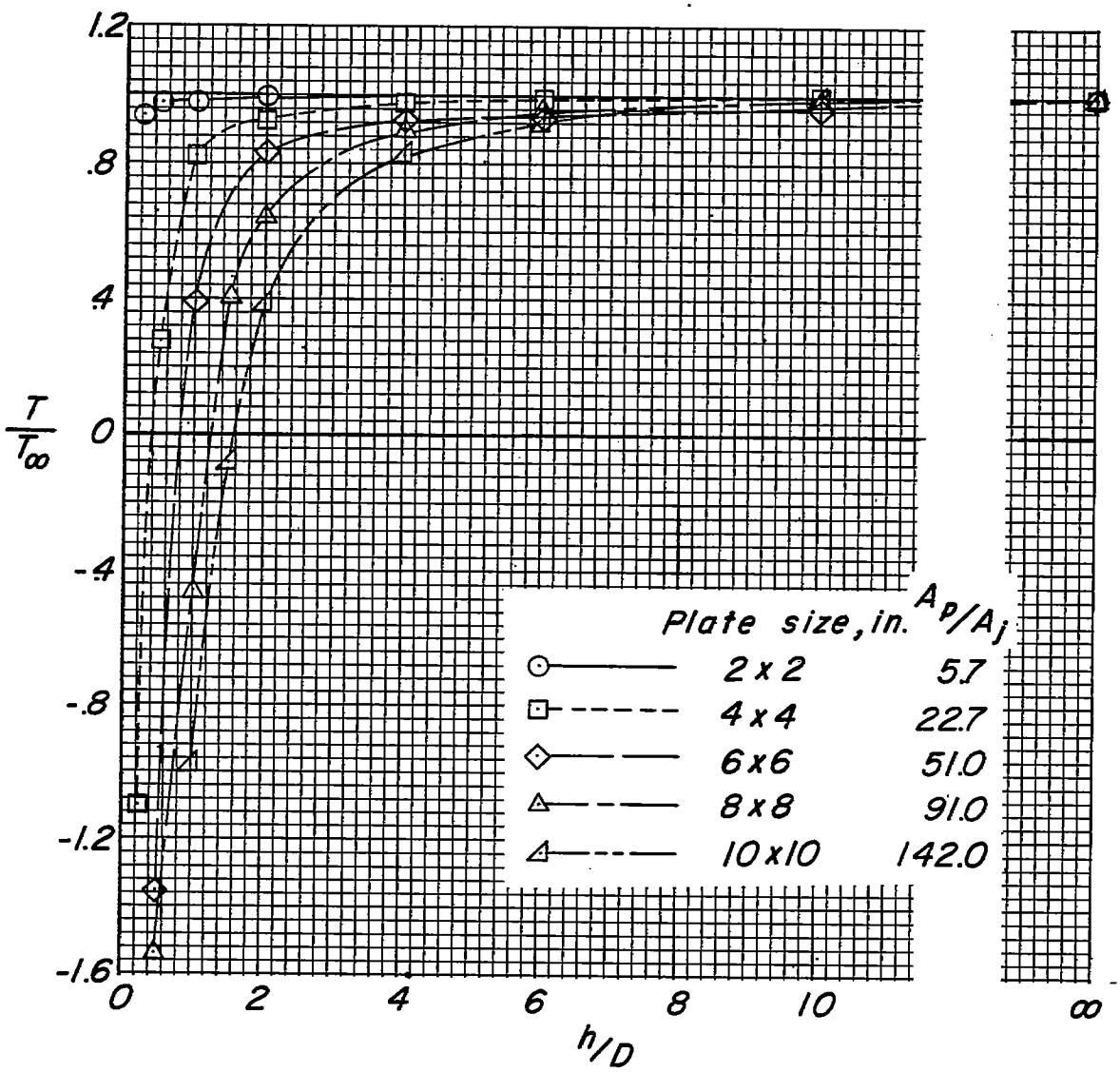

(c) $\frac{p_{p,\infty}}{p} = 2.70$.

Figure 11.- Concluded.

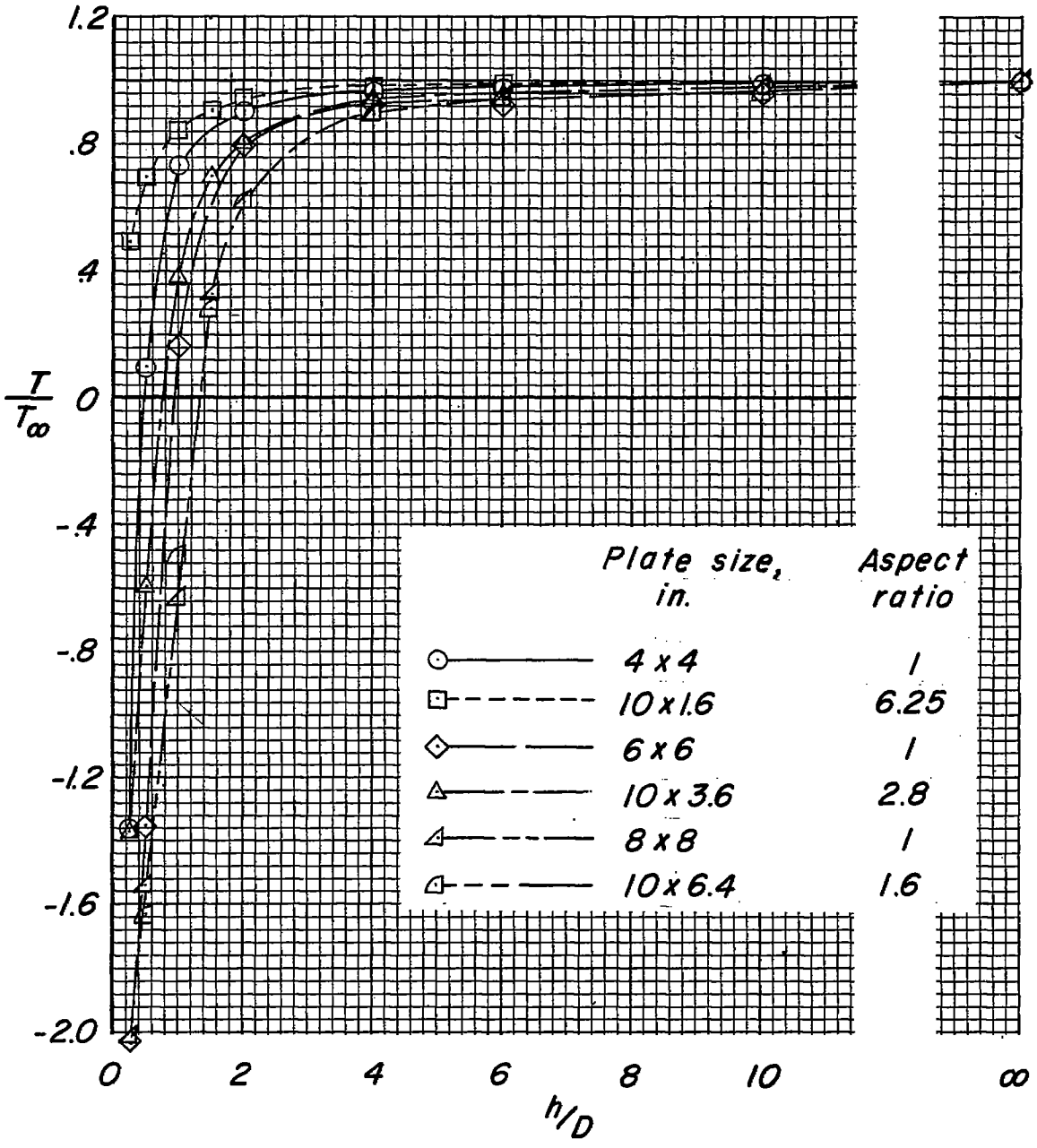

Figure 12.- Effect of aspect ratio and height above ground on T/T_∞. $\frac{p_{p,\infty}}{p} = 2.12$; $x/D = 0$.

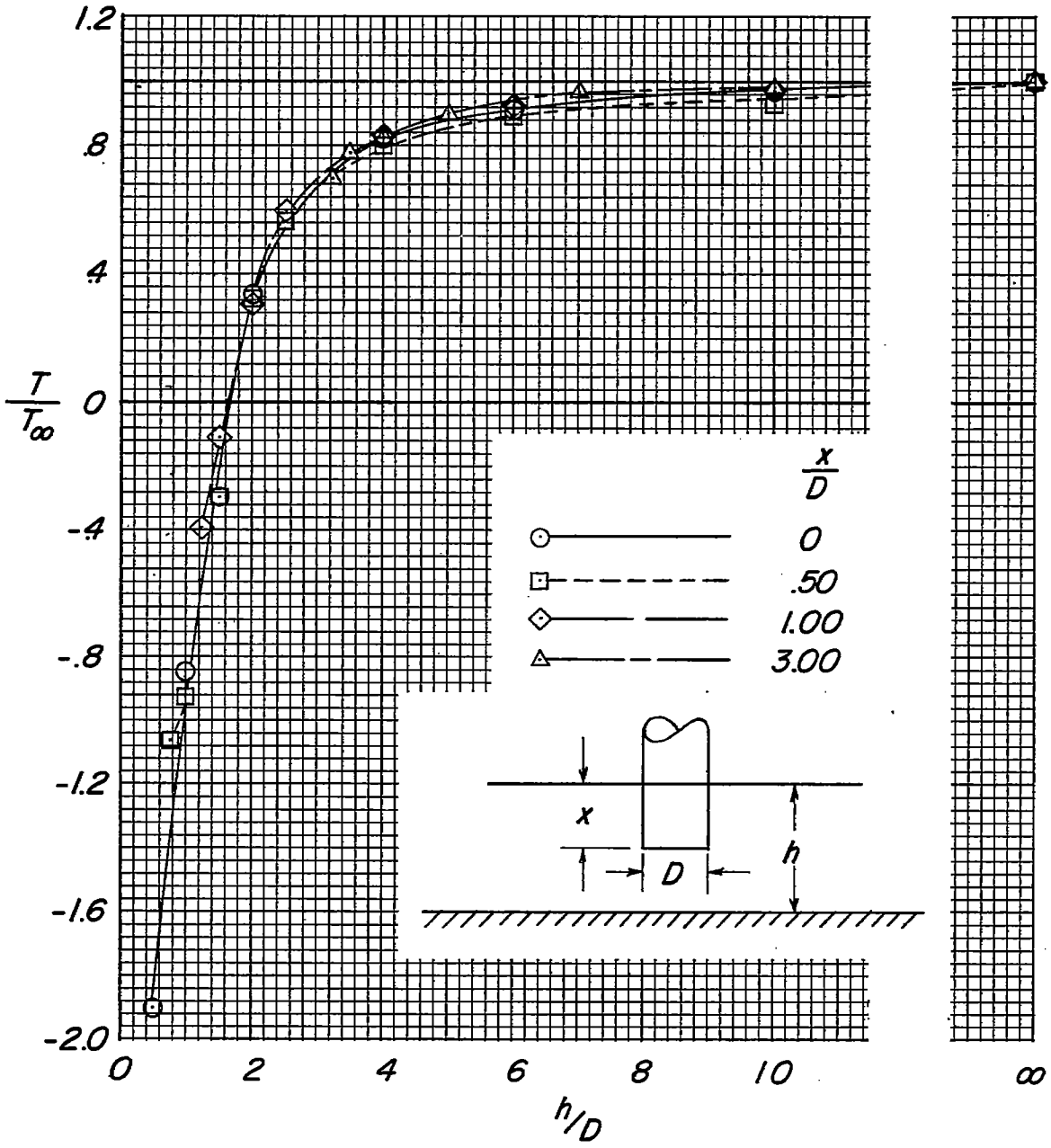

Figure 13.- Effect of height above ground on T/T_∞ of largest square plate $(A_p/A_j = 142.0)$ located at various distances from nozzle exit. $\frac{p_{p,\infty}}{p} = 2.12$.

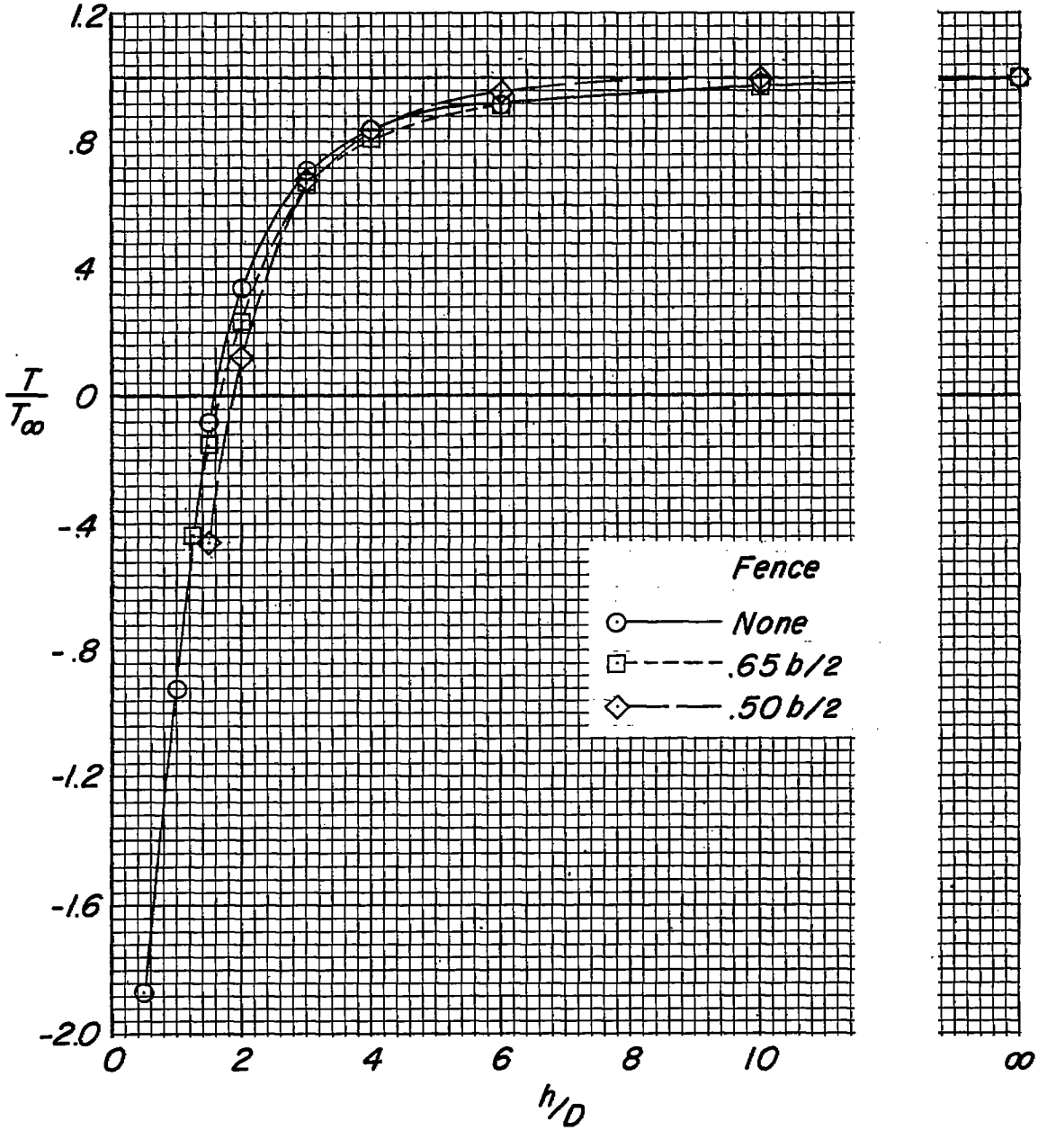

Figure 14.- Effect of fences with height above ground on T/T_∞ of large triangular plate $\left(A_p/A_j = 142.0\right)$. $\frac{p_{p,\infty}}{p} = 2.12$; $x/D = 0$.

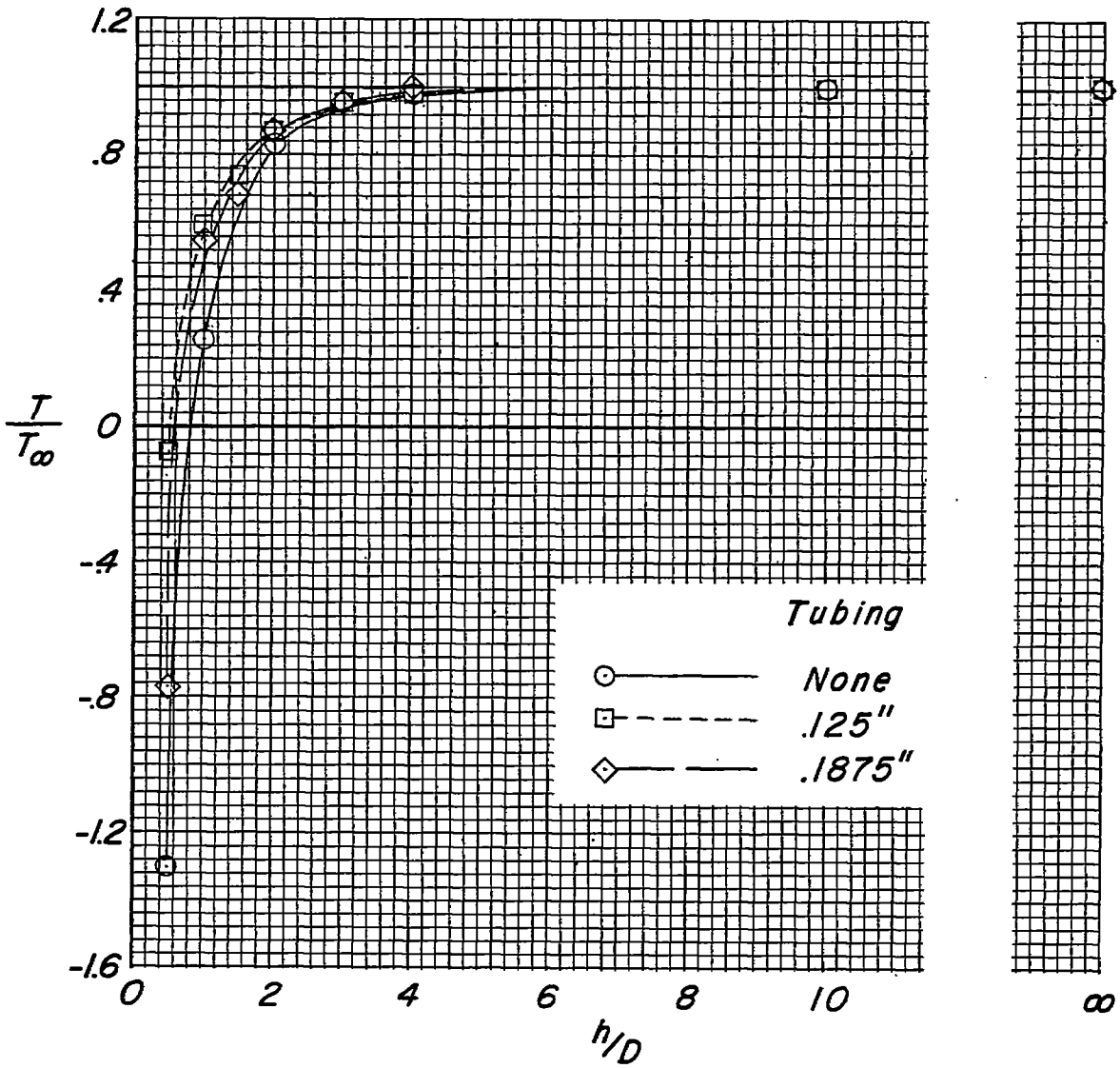

Figure 15.- Effect of various-diameter tubing placed in concentric squares on T/T_∞ of small triangular plate $\left(A_p/A_j = 51.0\right)$. $\frac{p_{p,\infty}}{p} = 2.12$; $x/D = 0$.

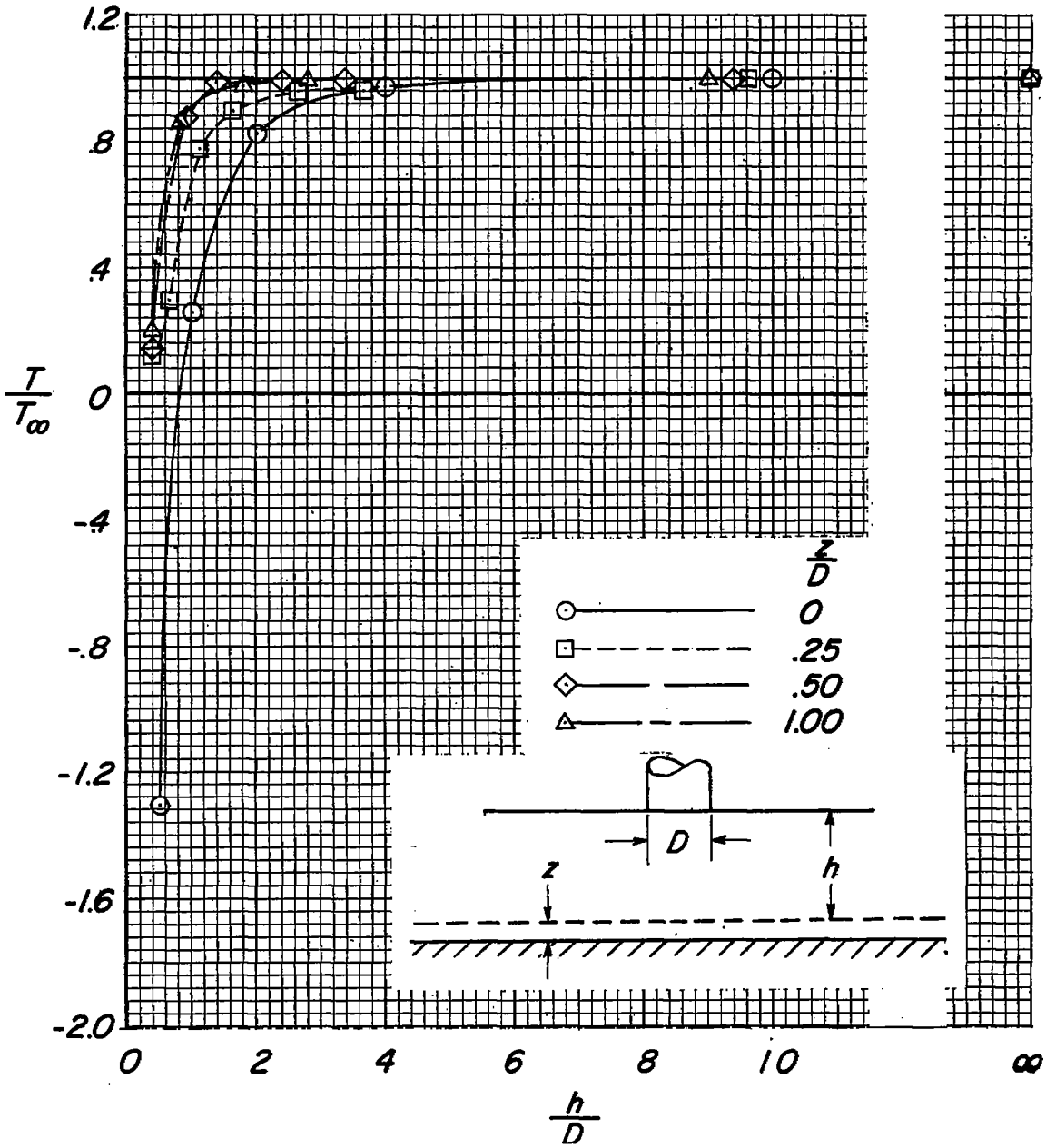

(a) $A_p/A_j = 51.0$.

Figure 16.- Effect of height above perforated plate on T/T_∞ of two triangular plates investigated for various heights of perforated plate above ground. Porosity of plate ≈ 0.40; $\frac{p_{p,\infty}}{p} = 2.12$; $x/D = 0$.

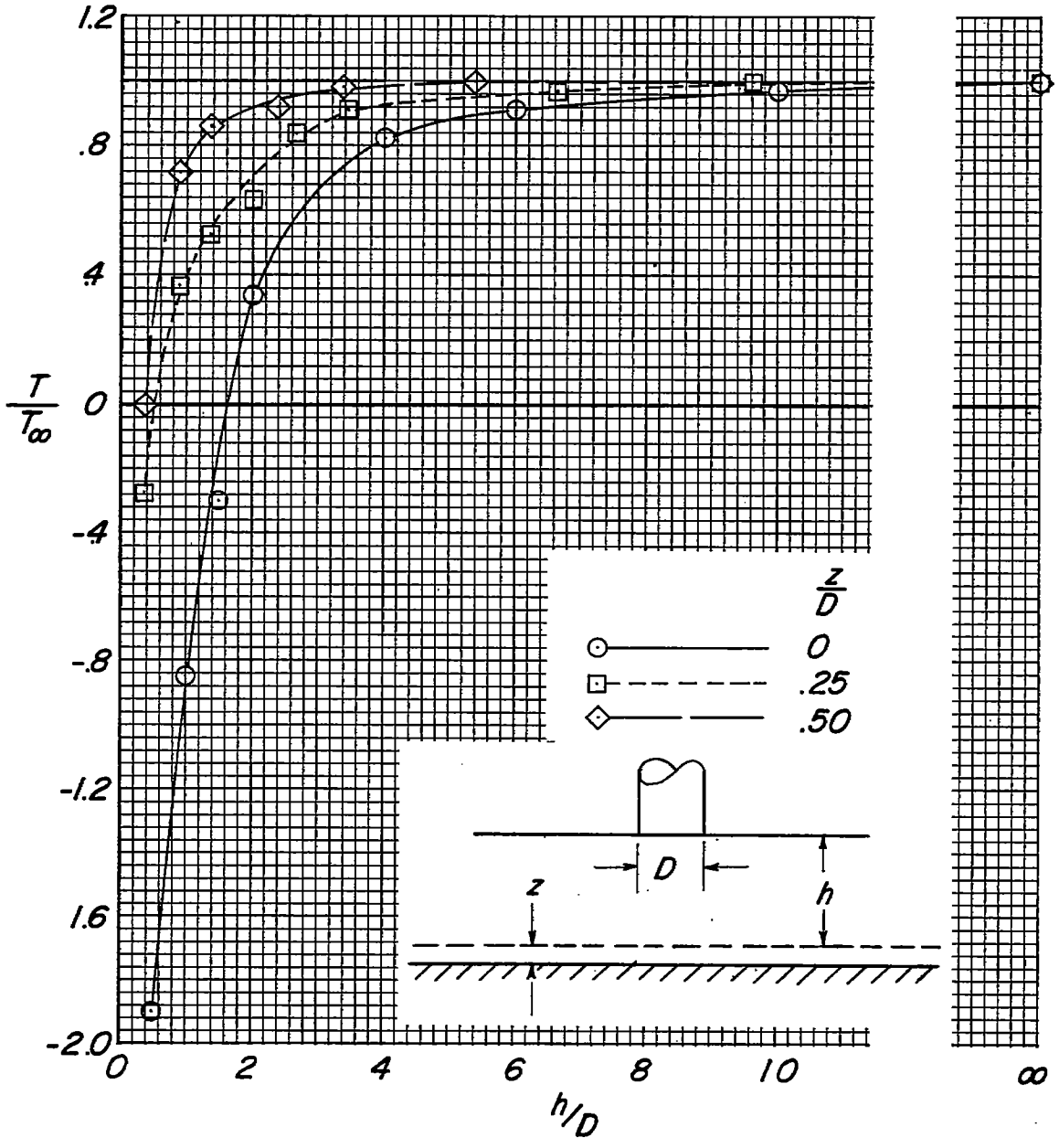

(b) $A_p/A_j = 142.0$.

Figure 16.- Concluded.

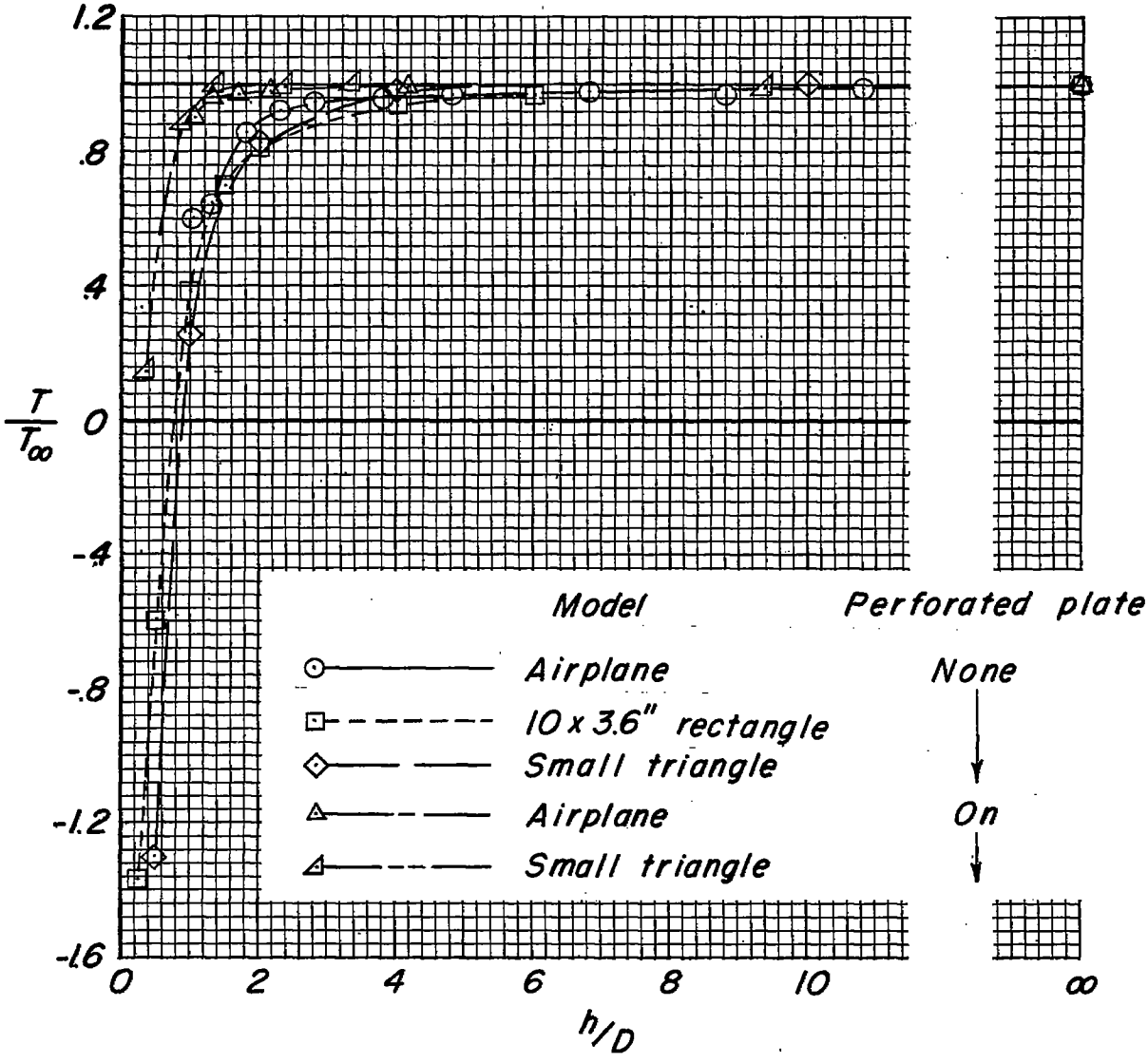

Figure 17.- Effect of plan form and perforated plate on T/T_∞. Perforated plate 1/2 inch above ground when installed; $\frac{p_{p,\infty}}{p} = 2.12$. (Note that area of each model equals approximately 36 square inches; $x/D = 0$.)

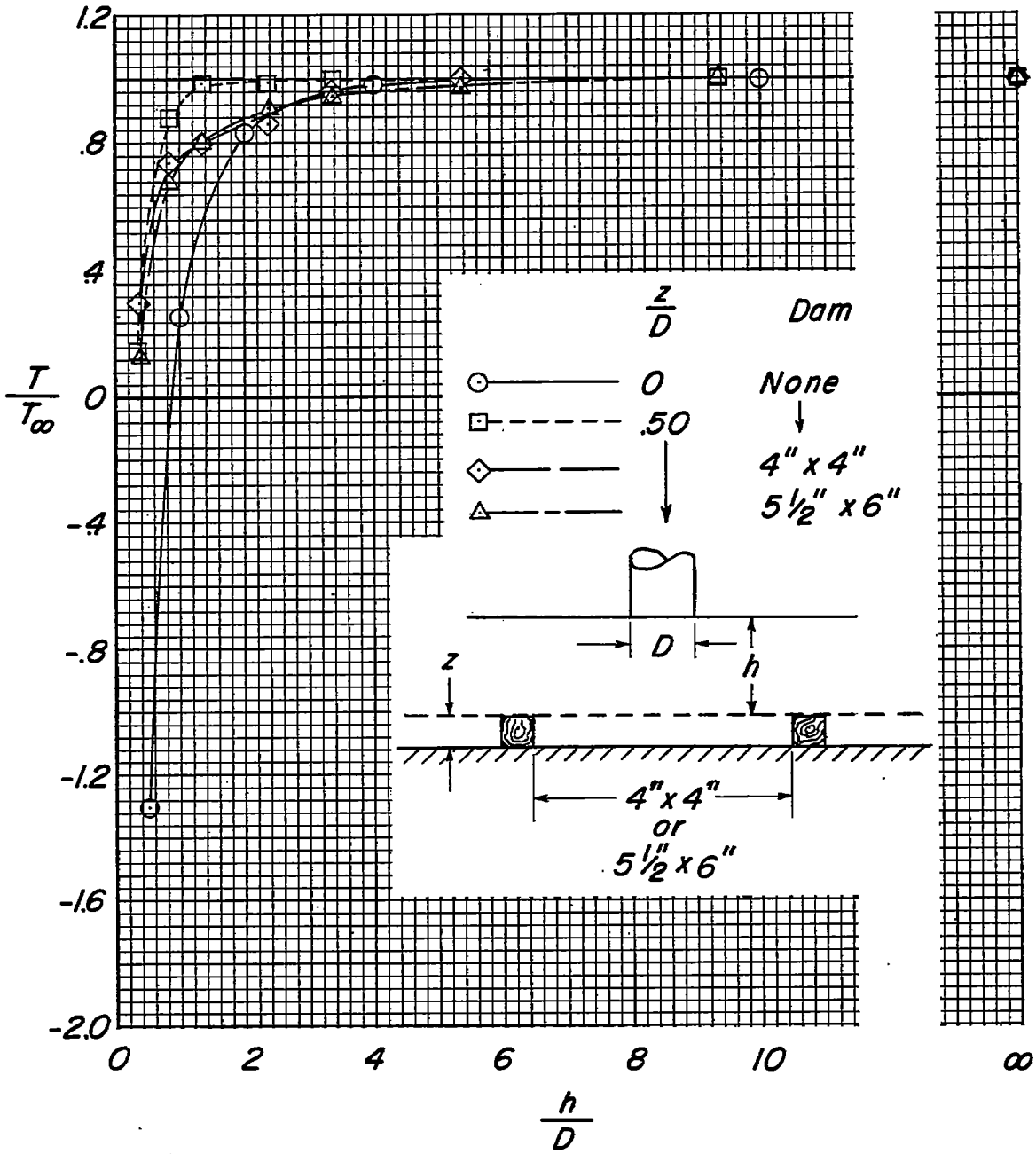

Figure 18.- Effect of dams between perforated plate and ground board on T/T_∞ of small triangular plate $\left(A_p/A_j = 51.0\right)$. $\frac{p_{p,\infty}}{p} = 2.12$; $x/D = 0$.

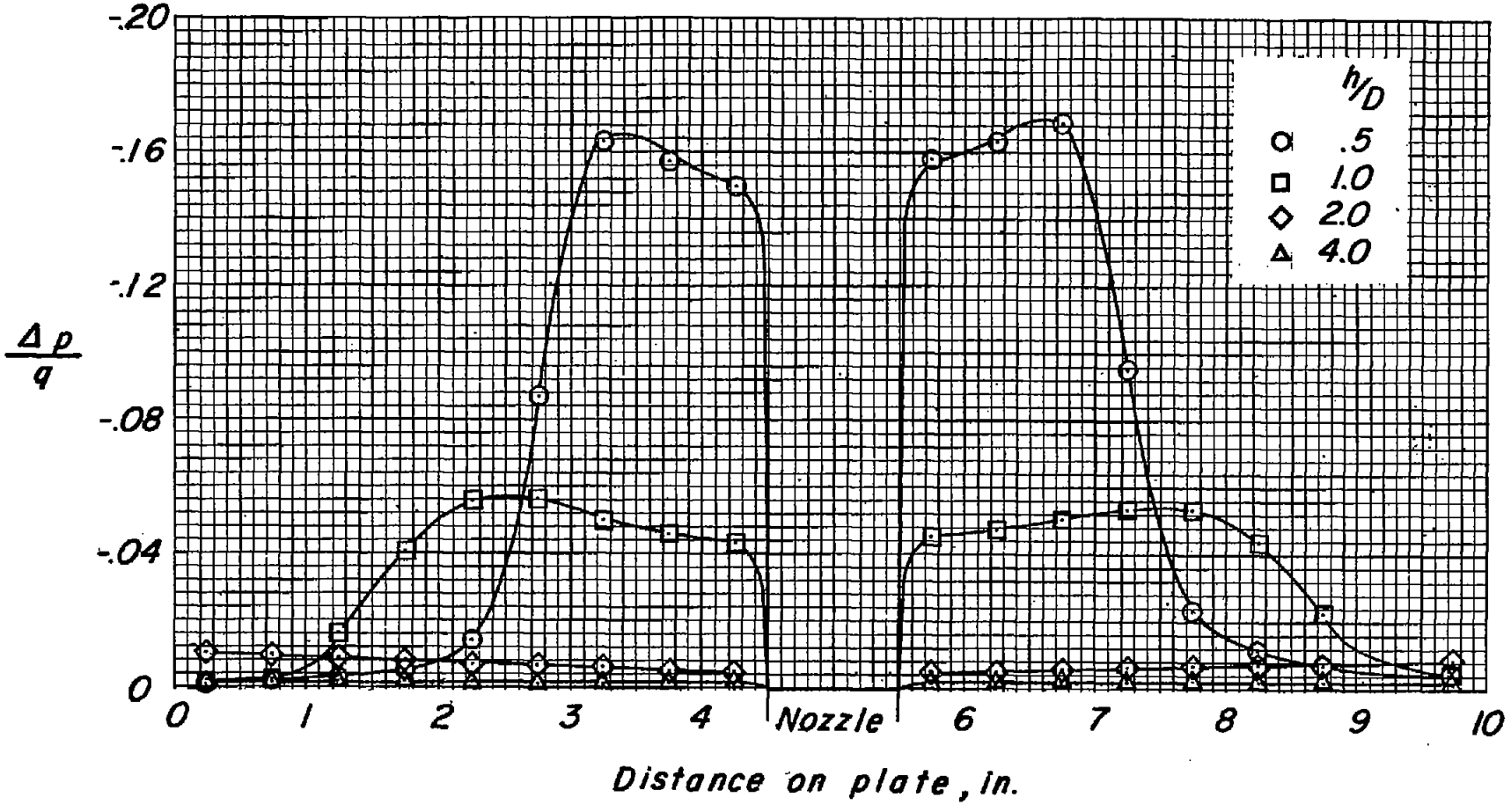

(a) $A_p/A_j = 142.0$.

Figure 19.- Effect of height above ground on negative induced pressures on the lower surface of two of the square plates employed. $\frac{p_{p,\infty}}{p} = 2.12$; $x/D = 0$.

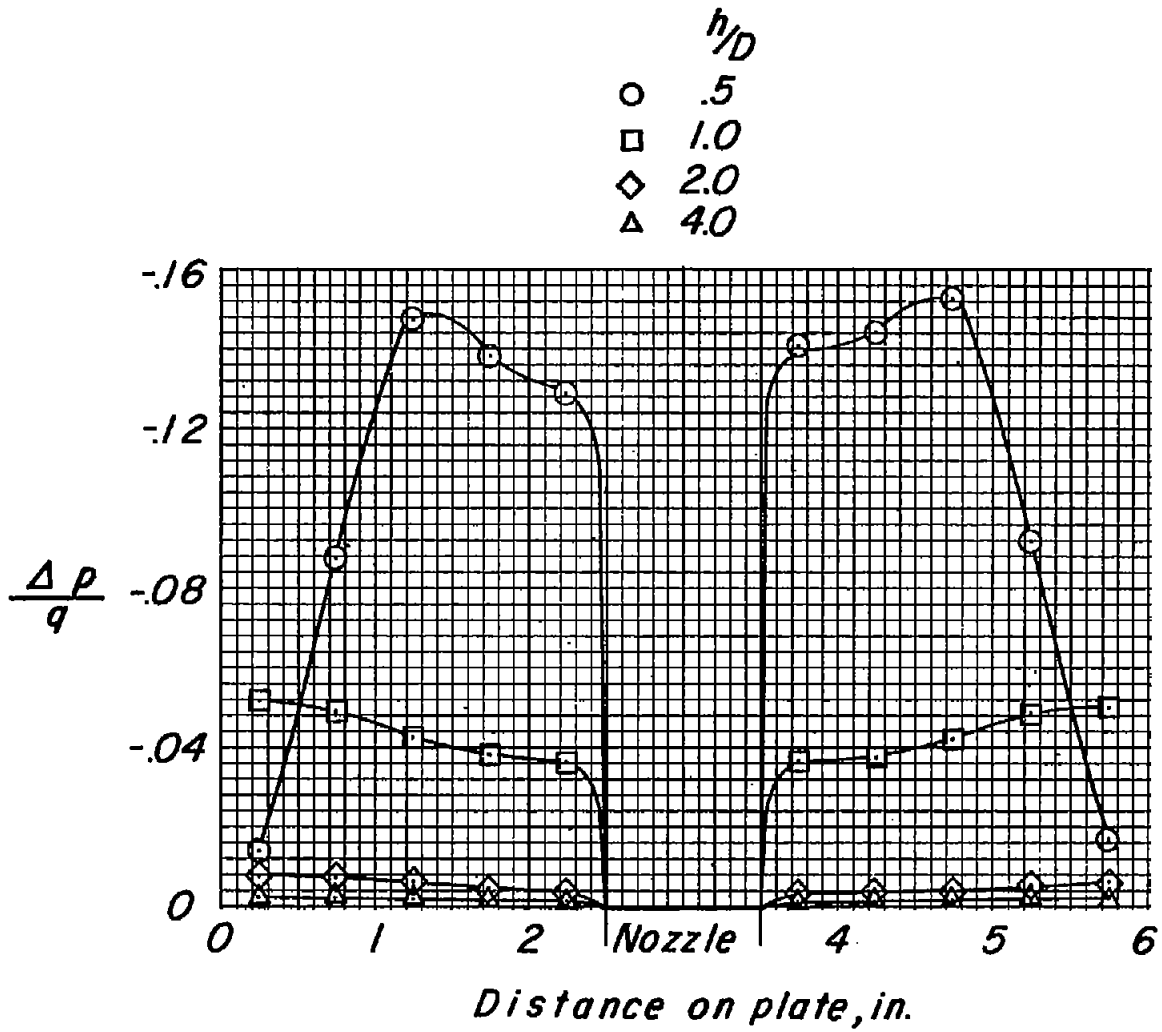

(b) $A_p/A_j = 51.0$.

Figure 19.- Concluded.

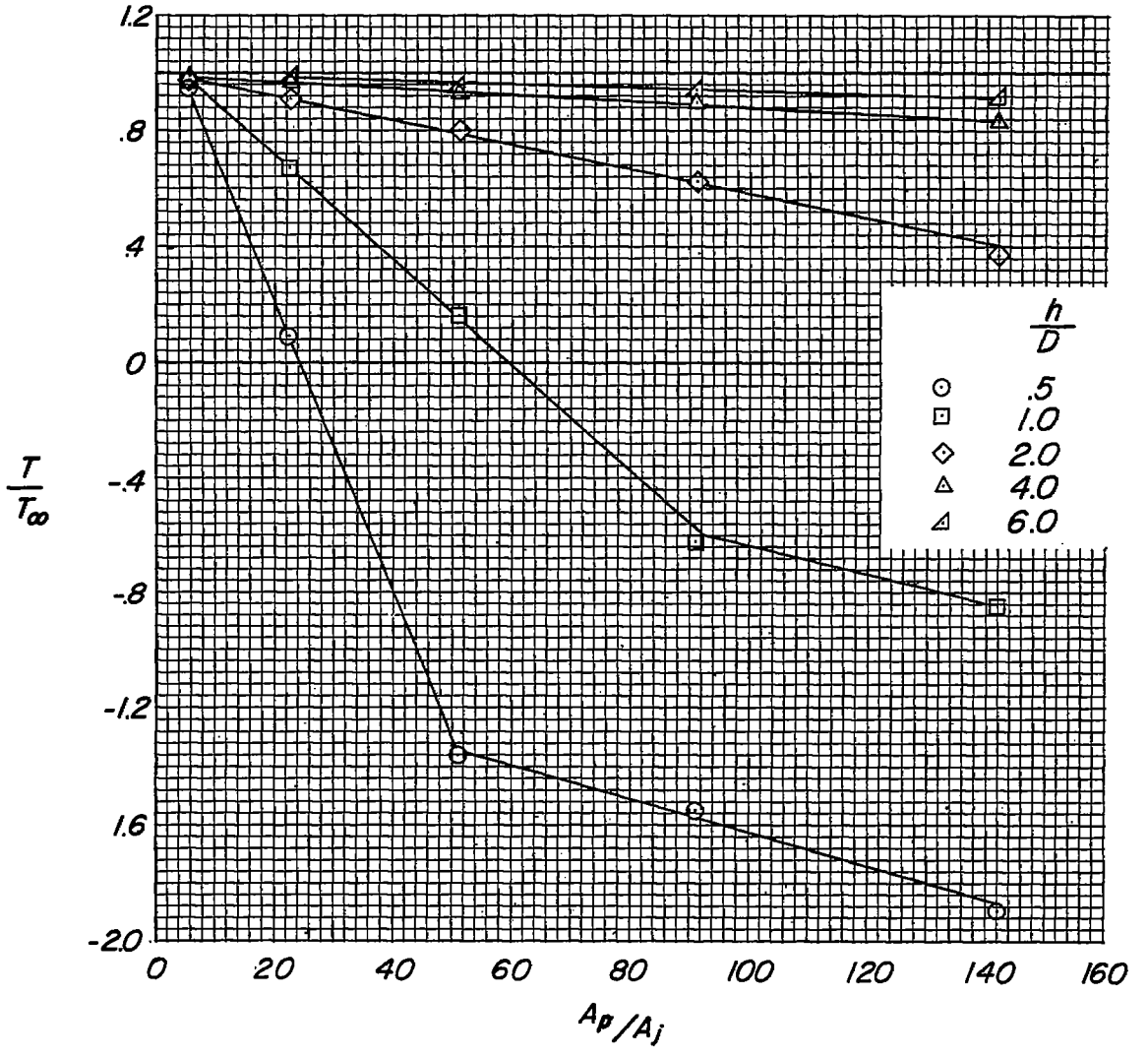

Figure 20.- Variation of T/T_∞ with ratio of area of square plates to area of jet at different heights above ground. $\frac{p_{p,\infty}}{p} = 2.12$; $x/D = 0$.

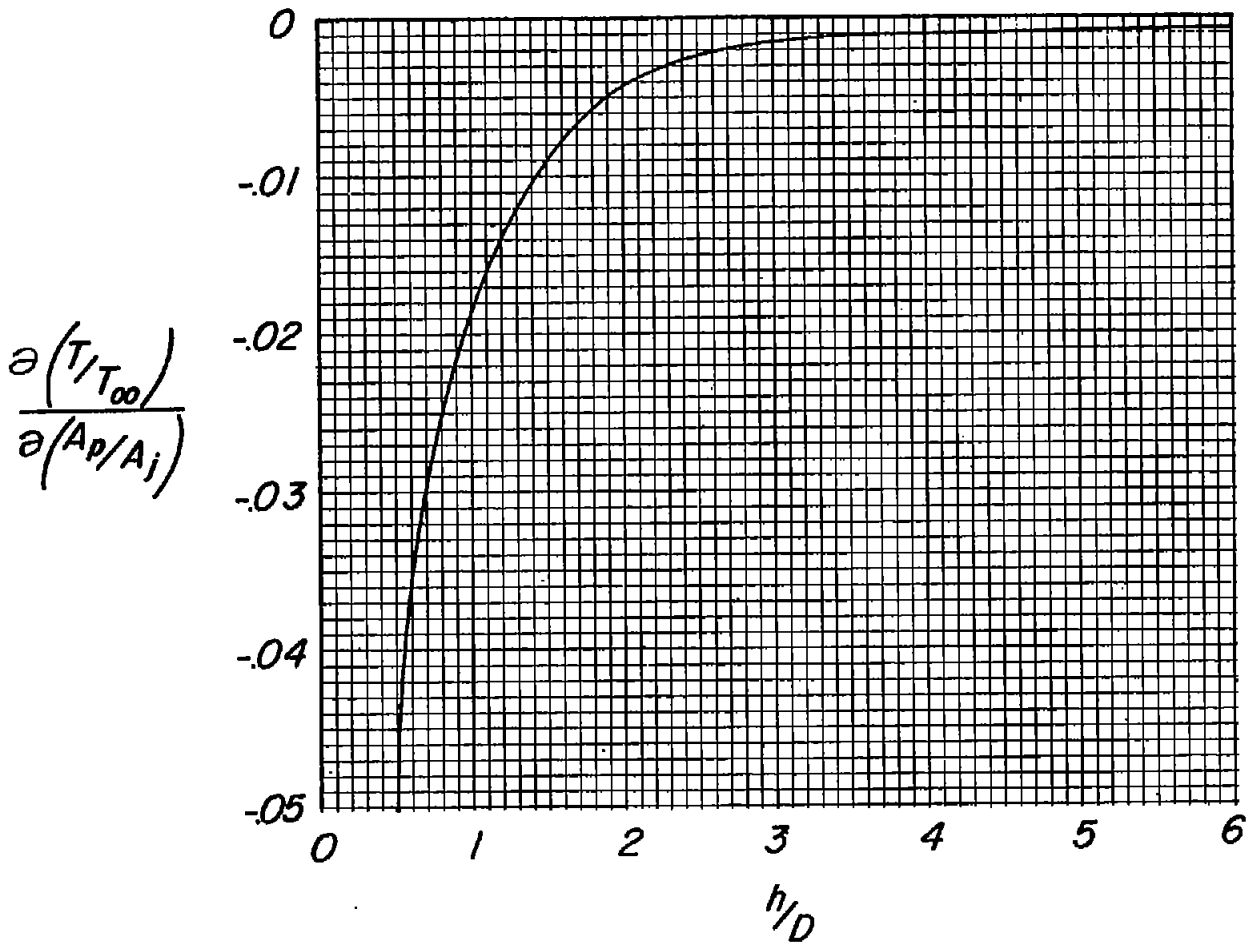

Figure 21.- Summary of change in T/T_∞ with A_p/A_j in moving away from or toward the ground for square plates employed in this investigation. $\frac{p_{p,\infty}}{p} = 2.12$; $x/D = 0$.

NACA - Langley Field, Va.